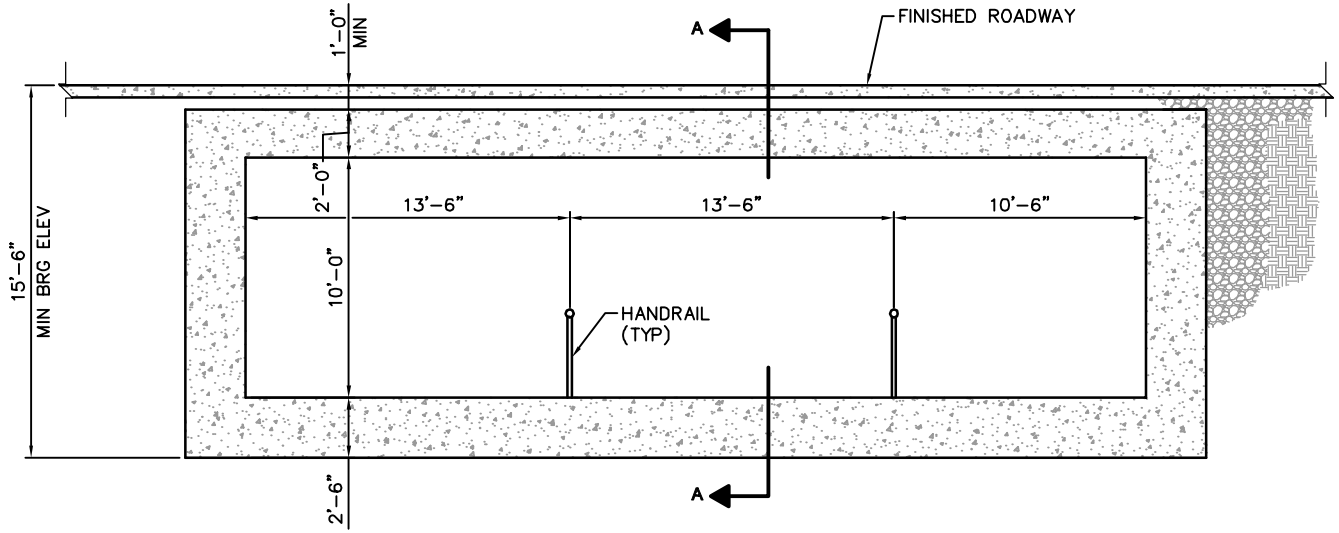

CAST-IN-PLACE BOX CULVERT OPTION

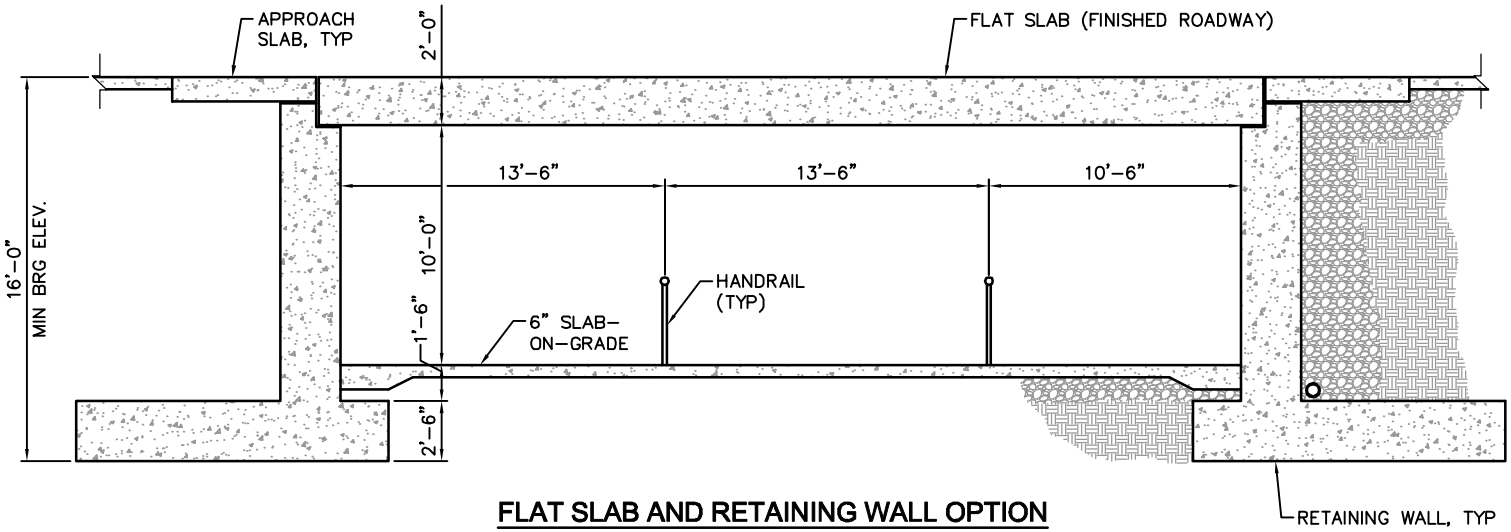

FLAT SLAB AND RETAINING WALL OPTION

Kimley-Horn and Associates, Inc.
SUITE 600
333 FAYETTEVILLE STREET
RALEIGH, NC 27601
PHONE: 919.835.1494
FAX: 919.653.5647
NC License # F-0102
© 2012

KHA PROJECT: 011036184

PROJECT NAME: TRINITY ROAD PEDESTRIAN TUNNEL

CONCEPT SKETCH

DESCRIPTION: TUNNEL CROSS-SECTIONS

REF: -

SKETCH: 1 OF 2