PITT #173

PROJECT NO: 17BP.2.R.9

STATE	STATE PROJECT REFERENCE NO.	SHEET NO.	TOTAL SHEETS
N.C.	17BP.2.R.9	1	3

STATE PROJ. NO.	F. A. PROJ. NO.	DESCRIPTION
17BP.2.R.9	N/A	BRIDGE TO PIPE PROJECT

STATE OF NORTH CAROLINA
DIVISION OF HIGHWAYS

PITT COUNTY

PLAN FOR PROPOSED
HIGHWAY EROSION CONTROL

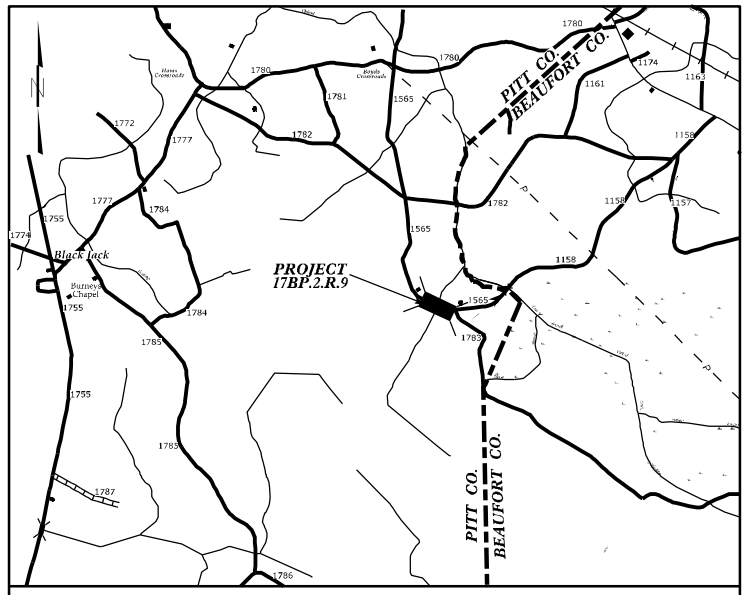

VICINITY MAP
(NOT TO SCALE)

Std. #	Description	Symbol
1605.01	Temporary Silt Fence	
1606.01	Special Sediment Control Fence	
SP	Wattle	

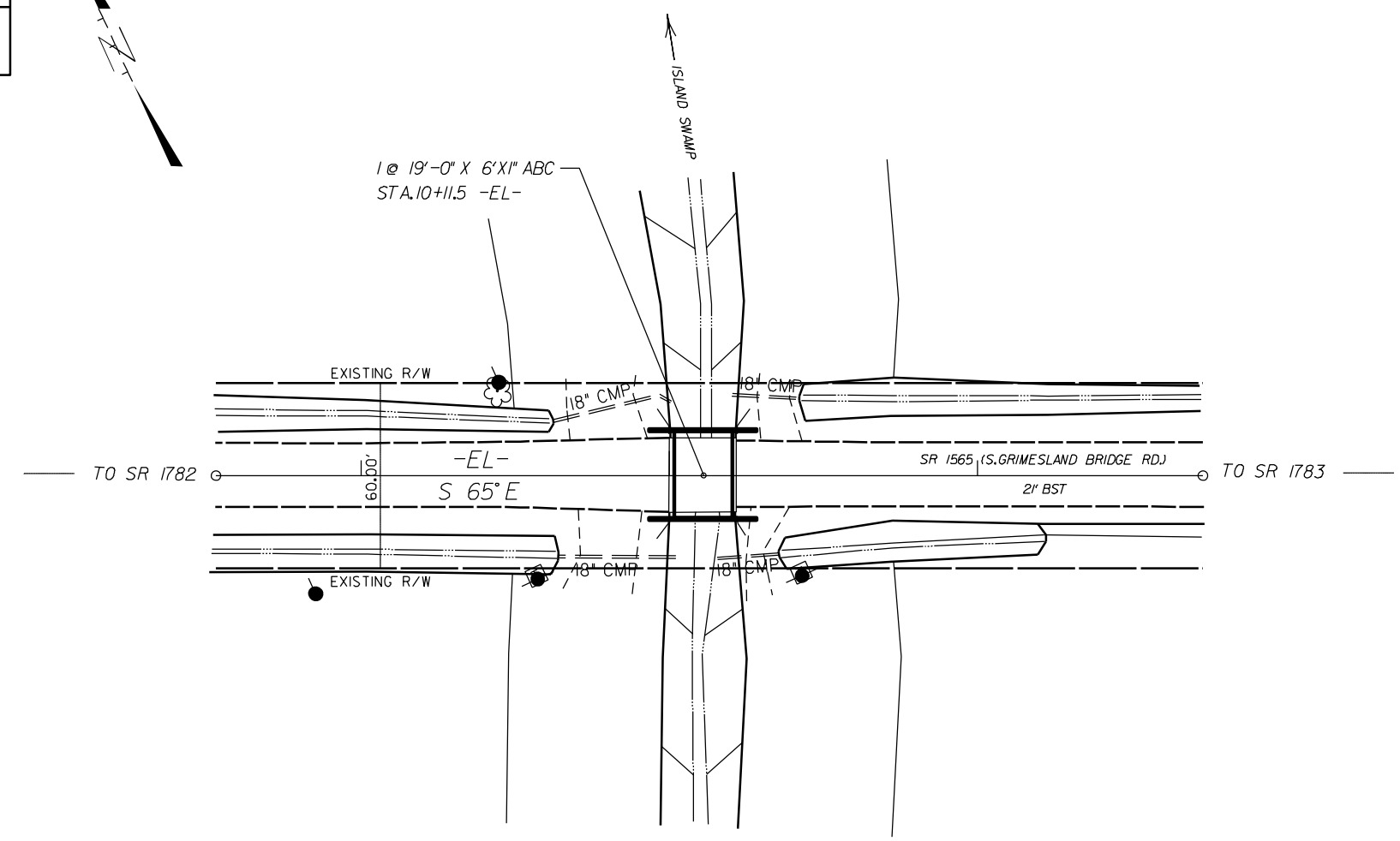

GRAPHIC SCALES

40 20 0 40 80
PLANS

PROJECT DESCRIPTION

EXISTING STRUCTURE: (1) 22'-6" X 25'-3" TIMBER FLOOR ON W14I-BEAMS WITH TIMBER BENT CAPS ON TIMBER PILES @ 8'-1" CENTERS.

PROPOSED STRUCTURE: (1) 19'-0" X 6'-1" ALUMINUM BOX CULVERT, 90 DEGREE SKEW WITH HEADWALLS.

Prepared in the Office of:

DIVISION OF HIGHWAYS

1704 N. Greene St. Greenville, NC 27834

2012 STANDARD SPECIFICATIONS

TIM CASEY
LEVEL III NAME

NO. 3082
LEVEL III CERTIFICATION NO.

The following roadway english standards as appear in "Roadway Standard Drawings"– Roadway Design Unit – N. C. Department of Transportation – Raleigh, N. C., dated January 2012 and the latest revison thereto are applicable to this project and by reference hereby are considered a part of these plans.

1604.01	Railroad Erosion Control Detail	1630.06	Special Stilling Basin
1605.01	Temporary Silt Fence	1632.01	Rock Inlet Sediment Trap Type A
1606.01	Special Sediment Control Fence	1632.02	Rock Inlet Sediment Trap Type B
1607.01	Gravel Construction Entrance	1632.03	Rock Inlet Sediment Trap Type C
1622.01	Temporary Berms and Slope Drains	1633.01	Temporary Rock Silt Check Type A
1630.01	Riser Basin	1634.01	Temporary Rock Sediment Dam Type A
1630.03	Temporary Silt Ditch	1634.02	Temporary Rock Sediment Dam Type B
1630.04	Stilling Basin	1635.01	Rock Pipe Inlet Sediment Trap Type A
1630.05	Temporary Diversion	1635.02	Rock Pipe Inlet Sediment Trap Type B

PROJECT REFERENCE NO.	SHEET NO.
17BP.2.R.9	EC2

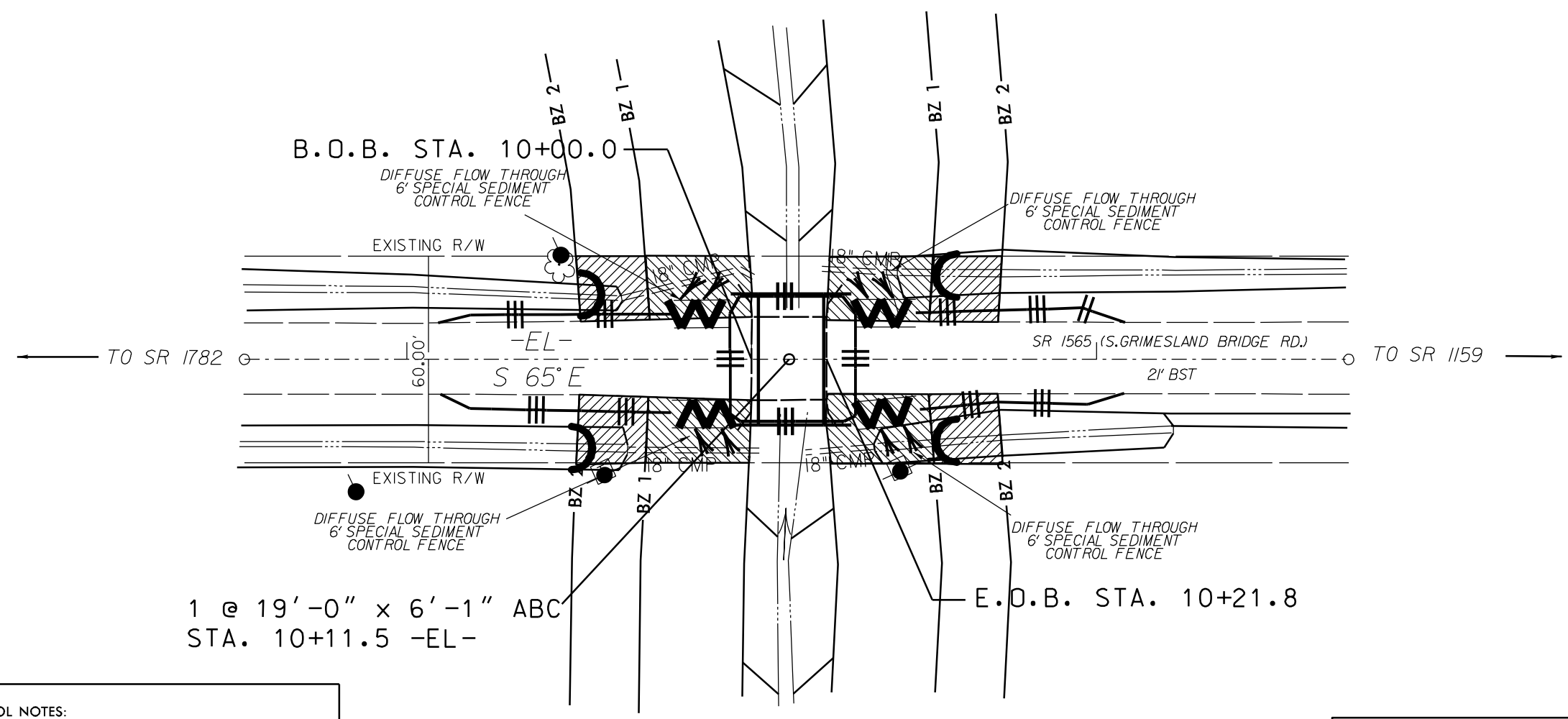

GENERAL EROSION CONTROL NOTES:

THESE EROSION AND SEDIMENT CONTROL PLANS COMPLY WITH THE REGULATIONS SET FORTH BY THE NCG-010000 GENERAL CONSTRUCTION PERMIT EFFECTIVE AUGUST 3, 2011 ISSUED BY THE NORTH CAROLINA DEPARTMENT OF ENVIRONMENT AND NATURAL RESOURCES DIVISION OF WATER QUALITY.

INSTALL EROSION/SEDIMENT CONTROL MEASURES ACCORDING TO PLANS.

ANY DEVIATION FROM OPTIONS GIVEN WILL REQUIRE PRIOR APPROVAL BY ENGINEER.

ADDITIONAL EROSION CONTROL DEVICES MAY NEED TO BE INSTALLED AS DIRECTED BY THE ENGINEER.

SEED ALL DISTRUBED AREAS ACCORDING TO THE SITE STABILIZATION TIMEFRAMES.

INSPECT AND PROVIDE REQUIRED MAINTENANCE ON ALL TEMPORARY SEDIMENT CONTROL DEVICES AFTER EACH RAINFALL EVENT OF 0.5 INCHES OR GREATER.

INSTALLATION SCHEDULE:

INSTALL EROSION/SEDIMENT CONTROL DEVICES PRIOR TO DEMOLITION OF EXISTING STRUCTURE.

UPON COMPLETION OF DEMOLITION PHASE INSTALL TEMPORARY SILT FENCE ALONG TOP OF BANK AT EACH APPROACH.

PREPARE CULVERT FOUNDATION WHILE LIMITING MATERIAL AND SEDIMENT FROM ENTERING THE STREAM AND/OR ESCAPING THE PROJECT.

INSTALL PROPOSED ALLUMINUM BOX CULVERT AND HEADWALLS.

COMPLETE BACKFILL OF PROPOSED BOX CULVERT.

INSTALL TEMPORARY SILT FENCE ALONG EACH HEADWALL AS SHOWN OF PLANS.

REMOVE TEMPORARY SILT FENCE INSTALLED ALONG TOP OF BANK AT EACH APPROACH.

ESTABLISH PERMANENT VEGETATIVE COVER ON DISTURBED AREAS.

REMOVE ALL EROSION/SEDIMENT CONTROL DEVICES AFTER PERMANENT VEGETATIVE COVER HAS BEEN ESTABLISHED.

Std. #	Description	Symbol
1605.01	Temporary Silt Fence	
1606.01	Special Sediment Control Fence	
SP	Wattle	

SOIL STABILIZATION TIMEFRAMES

SITE DESCRIPTION	STABILIZATION TIME	TIMEFRAME EXCEPTIONS
PERIMETER DIKES, SWALES, DITCHES AND SLOPES	7 DAYS	NONE
HIGH QUALITY WATER (HQW) ZONES	7 DAYS	NONE
SLOPES STEEPER THAN 3:1	7 DAYS	IF SLOPES ARE 10' OR LESS IN LENGTH AND ARE NOT STEEPER THAN 2:1, 14 DAYS ARE ALLOWED.
SLOPES 3:1 OR FLATTER	14 DAYS	7 DAYS FOR SLOPES GREATER THAN 50' IN LENGTH.
ALL OTHER AREAS WITH SLOPES FLATTER THAN 4:1	14 DAYS	NONE, EXCEPT FOR PERIMETERS AND HQW ZONES.

SPECIAL SEDIMENT CONTROL FENCE:

THE WORK COVERED BY THIS SECTION CONSISTS OF THE CONSTRUCTION, MAINTENANCE, AND REMOVAL OF SPECIAL SEDIMENT CONTROL FENCE. PLACE SPECIAL SEDIMENT CONTROL FENCE AS SHOWN ON THE PLANS OR AS DIRECTED BY THE ENGINEER.

MATERIALS:

(A) POSTS:

STEEL POSTS SHALL BE AT LEAST 5 FEET IN LENGTH, APPROXIMATELY 1 3/8 INCHES WIDE MEASURED PARALLEL TO THE FENCE, AND HAVE A MINIMUM WEIGHT OF 1.25 LB/FT OF LENGTH. THE POST SHALL BE EQUIPPED WITH AN ANCHOR PLATE HAVING A MINIMUM AREA OF 14.0 SQUARE INCHES, AND SHALL HAVE A MEANS OF RETAINING WIRE IN THE DESIRED POSITION WITHOUT DISPLACEMENT.

(B) 1/4 INCH HARDWARE CLOTH:

HARDWARE CLOTH SHALL HAVE 1/4 INCH OPENINGS CONSTRUCTED FROM #24 GAUGE WIRE. INSTALL HARDWARE CLOTH ACCORDING TO THE DETAIL SHOWN ON THE PLANS.

(C) SEDIMENT CONTROL STONE:

SEDIMENT CONTROL STONE SHALL MEET THE REQUIREMENTS OF SECTION 1005. INSTALL STONE ACCORDING TO THE DETAIL SHOWN ON THE PLANS.

MAINTENANCE AND REMOVAL:

THE CONTRACTOR SHALL MAINTAIN THE SPECIAL SEDIMENT CONTROL FENCE UNTIL THE PROJECT IS ACCEPTED OR UNTIL THE FENCE IS REMOVED, AND SHALL REMOVE AND DISPOSE OF SILT ACCUMULATIONS AT THE FENCE WHEN SO DIRECTED BY THE ENGINEER IN ACCORDANCE WITH SECTION 1630.

THE QUANTITY OF POSTS, SEDIMENT CONTROL STONE AND HARDWARE CLOTH AS MEASURED ABOVE WILL BE PAID FOR AT THE CONTRACT PRICE FOR "LUMP SUM FOR EROSION CONTROL". SUCH PRICE AND PAYMENT WILL BE FULL COMPENSATION FOR ALL WORK COVERED BY THIS PROVISION, INCLUDING BUT NOT LIMITED TO, FURNISHING ALL MATERIALS, INSTALLATION, AND REMOVAL AND DISPOSAL OF SILT ACCUMULATIONS AND MATERIALS.

PROJECT REFERENCE NO.	SHEET NO.
17BP2.R.9	EC2

COIR FIBER WATTLE DETAIL

PROJECT REFERENCE NO.	SHEET NO.
F-5111	EC-20
R/W SHEET NO.	
ROADWAY DESIGN ENGINEER	HYDRAULICS ENGINEER

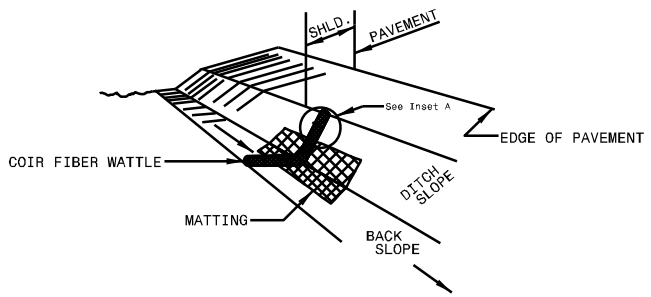

ISOMETRIC VIEW

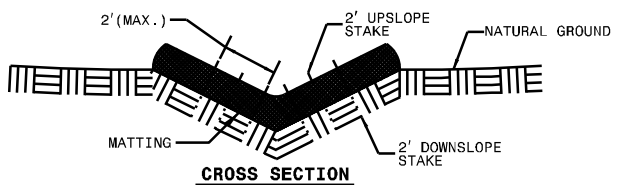

CROSS SECTION
VEE DITCH

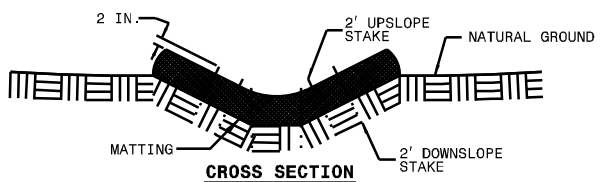

CROSS SECTION
TRAPEZOIDAL DITCH

NOTES:

USE MINIMUM 12 IN. DIAMETER COIR FIBER (COCONUT FIBER) WATTLE.

USE 2 FT. WOODEN STAKES WITH A 2 IN. BY 2 IN. NOMINAL CROSS SECTION.

ONLY INSTALL WATTLE(S) TO A HEIGHT IN DITCH SO FLOW WILL NOT WASH AROUND WATTLE AND SCOUR DITCH SLOPES AND AS DIRECTED.

INSTALL A MINIMUM OF 2 UPSLOPE STAKES AND 4 DOWNSLOPE STAKES AT AN ANGLE TO WEDGE WATTLE TO BOTTOM OF DITCH.

PROVIDE STAPLES MADE OF 0.125 IN. DIAMETER STEEL WIRE FORMED INTO A U SHAPE NOT LESS THAN 12" IN LENGTH.

INSTALL STAPLES APPROXIMATELY EVERY 1 LINEAR FOOT ON BOTH SIDES OF WATTLE AND AT EACH END TO SECURE IT TO THE SOIL.

INSTALL MATTING IN ACCORDANCE WITH SECTION 1631 OF THE STANDARD SPECIFICATIONS.

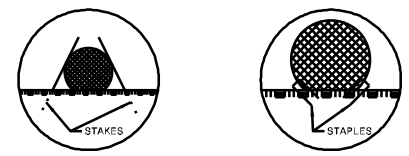

INSET A INSET B

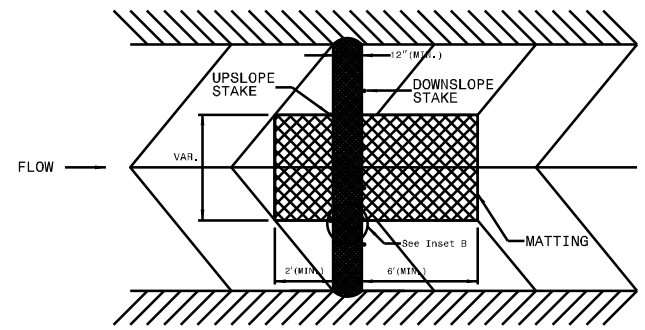

TOP VIEW

MATTING INSTALLATION DETAIL

PROJECT REFERENCE NO.	SHEET NO.
F-5111	EC-20
R/W SHEET NO.	
ROADWAY DESIGN ENGINEER	HYDRAULICS ENGINEER

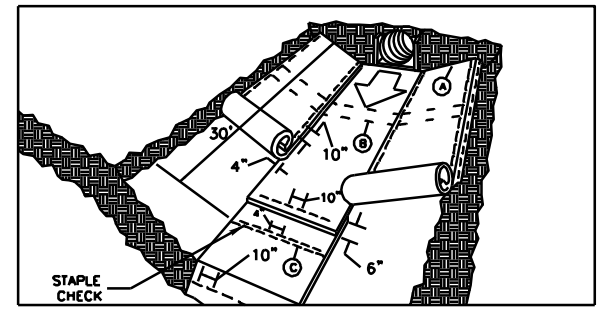

MATTING IN DITCHES

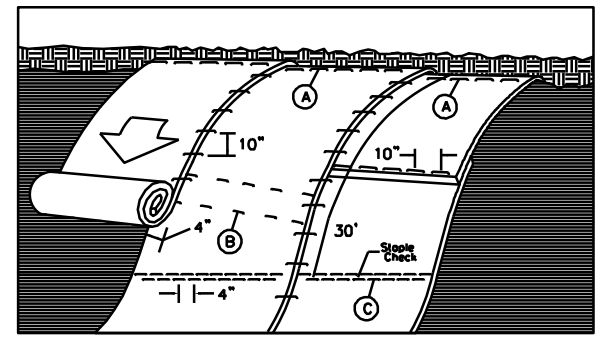

MATTING ON SLOPES

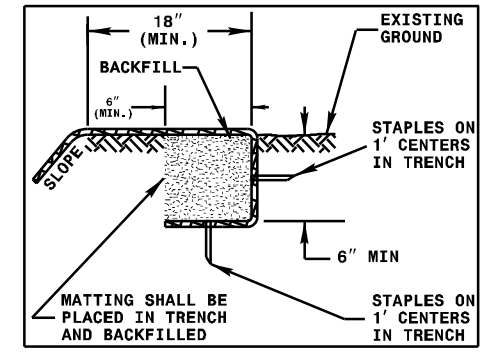

DIAGRAM (A)

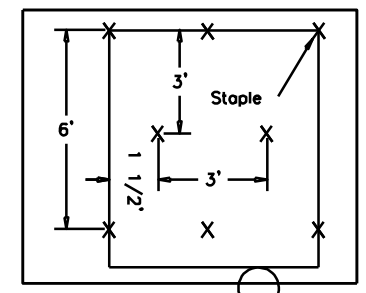

DIAGRAM (B)

Staple Check Pattern

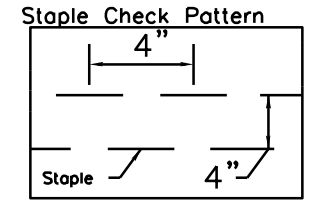

DIAGRAM (C)

NOTES:

THIS DETAIL APPLIES TO STRAW, EXCELSIOR, AND PERMANENT SOIL REINFORCEMENT MAT (PSRM) INSTALLATION.

STAPLES SHALL BE NO. 11 GAUGE STEEL WIRE FORMED INTO A "U" SHAPE WITH A MINIMUM THROAT WIDTH OF 1 INCH AND NOT LESS THAN 6 INCHES IN LENGTH.

NOT TO SCALE

STATE OF NORTH CAROLINA
DEPT. OF TRANSPORTATION
DIVISION OF HIGHWAYS
RALEIGH, N.C.

ENGLISH STANDARD DRAWING FOR
SPECIAL SEDIMENT CONTROL FENCE

SHEET 1 OF 1
1606.01

GENERAL NOTES:

USE NO. 5 OR NO. 57 STONE FOR SEDIMENT CONTROL STONE.

USE HARDWARE CLOTH 24 GAUGE WIRE MESH WITH 1/4 INCH MESH OPENINGS.

INSTALL 5 FT. SELF FASTENER ANGLE STEEL POST 2 FT. DEEP MINIMUM.

SPACE POST A MAXIMUM OF 3 FT.

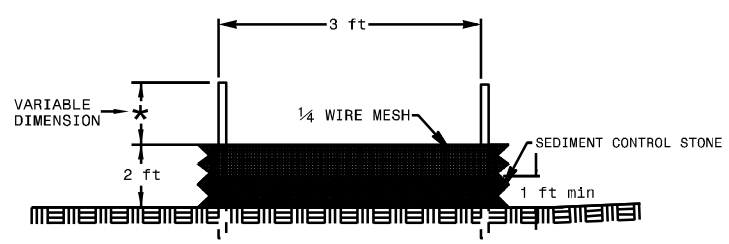

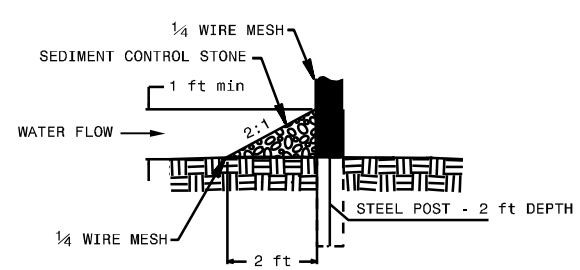

STATE OF NORTH CAROLINA
DEPT. OF TRANSPORTATION
DIVISION OF HIGHWAYS
RALEIGH, N.C.

ENGLISH STANDARD DRAWING FOR
SPECIAL SEDIMENT CONTROL FENCE

SHEET 1 OF 1
1606.01

STATE OF NORTH CAROLINA
DEPT. OF TRANSPORTATION
DIVISION OF HIGHWAYS
RALEIGH, N.C.

ENGLISH STANDARD DRAWING FOR
TEMPORARY SILT FENCE

SHEET 1 OF 1
1605.01

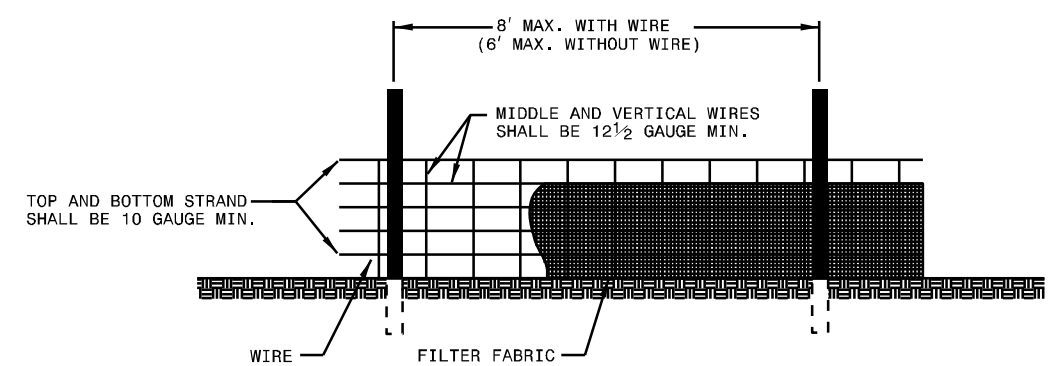

NOTES
USE WIRE A MINIMUM OF 32" IN WIDTH AND WITH A MINIMUM OF 6 LINE WIRES WITH 12" STAY SPACING.
USE FILTER FABRIC A MINIMUM OF 36" IN WIDTH AND FASTEN ADEQUATELY TO THE WIRE AS DIRECTED BY THE ENGINEER.
PROVIDE 5'-0" STEEL POST OF THE SELF-FASTENER ANGLE STEEL TYPE.

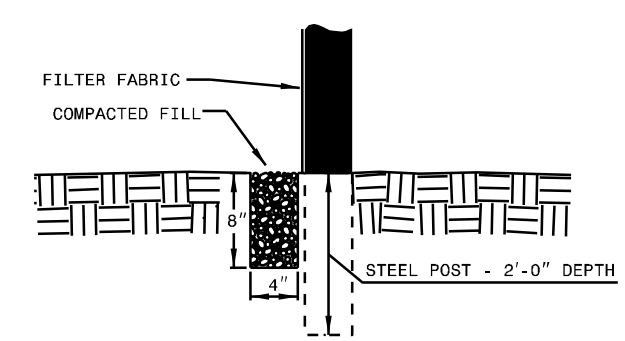

STATE OF NORTH CAROLINA
DEPT. OF TRANSPORTATION
DIVISION OF HIGHWAYS
RALEIGH, N.C.

ENGLISH STANDARD DRAWING FOR
TEMPORARY SILT FENCE

SHEET 1 OF 1
1605.01