09/08/99

See Sheet 1-A For Index of Sheets

STATE OF NORTH CAROLINA
DIVISION OF HIGHWAYS

Haywood County

STATE	STATE PROJECT REFERENCE NO.	SHEET NO.	TOTAL SHEETS
N.C.	112.104401	1	

STATE PROJ. NO.	F.A. PROJ. NO.	DESCRIPTION
112.104401	ER-NC05(2)	PE, CONST.

LOCATION: I-40 Between Mile Markers 3 and 4

TYPE OF WORK: Grading, Drainage, Paving, and Retaining Walls

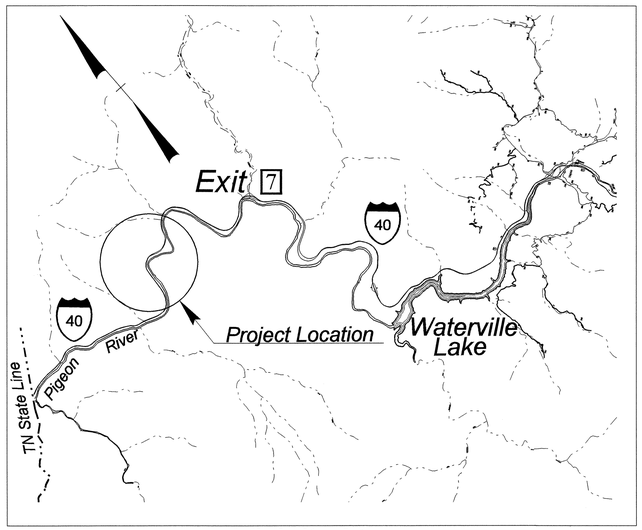

Vicinity Map

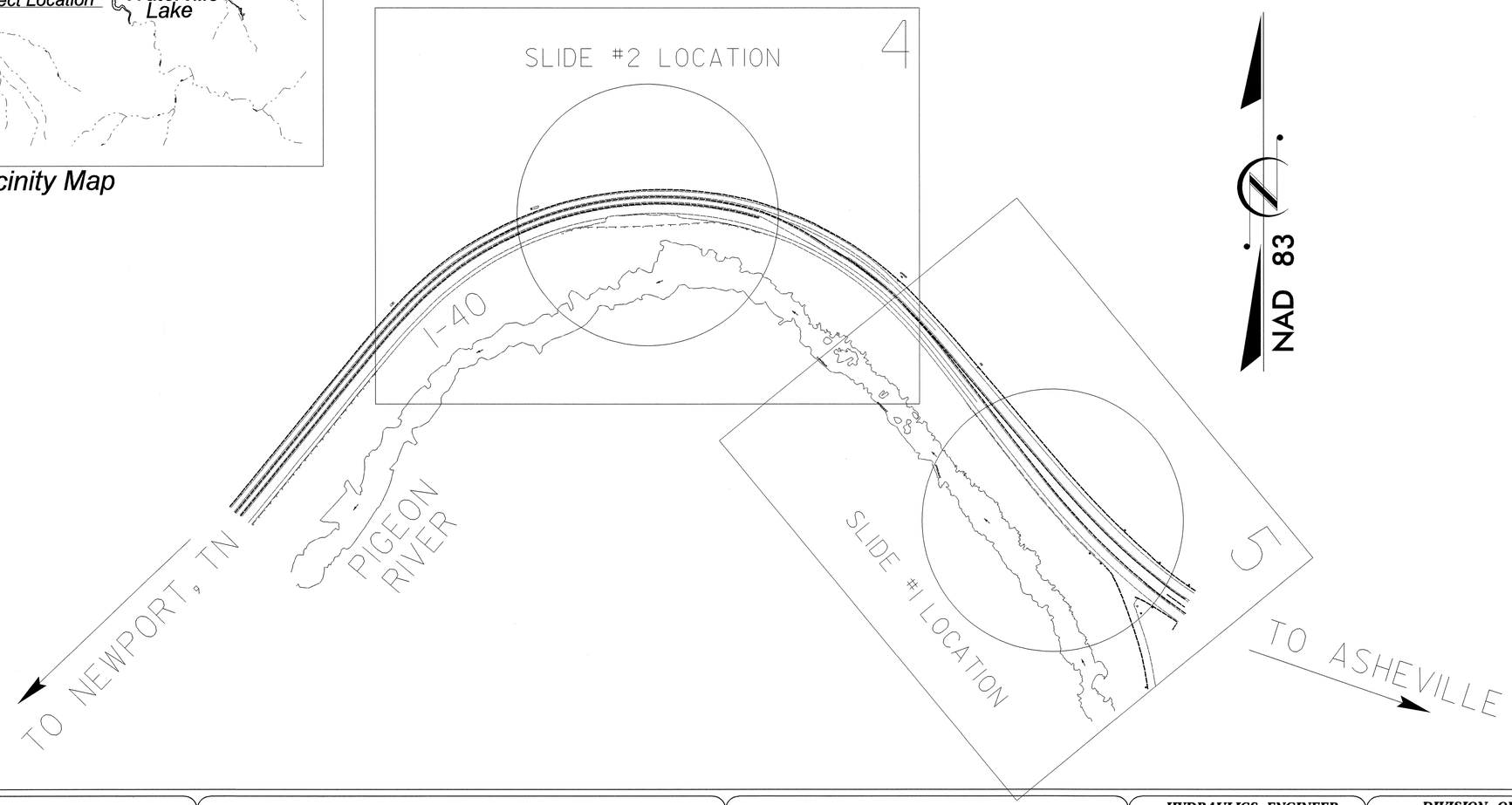

CONTRACT: C201320

13-OCT-2004 09:15
R:\Roadway\Proj\I40_rdy_tsh.dgn
JBMauney AT RD203033

GRAPHIC SCALES

50 25 0 50 100
PLANS

0
PROFILE (HORIZONTAL)

0
PROFILE (VERTICAL)

DESIGN DATA

ADT 2002 = 24,000 vpd
ADT =
DHV = 12 %
D = 60 %
T = 45 %
V = 60 MPH

PROJECT LENGTH

LENGTH PROJECT 112.104401 = 0.223 MILES

Prepared in the Office of:
DIVISION OF HIGHWAYS
1000 Birch Ridge Dr., Raleigh NC, 27610

2002 STANDARD SPECIFICATIONS

RIGHT OF WAY DATE: N/A

LETTING DATE: OCTOBER 25, 2004

James Speer, PE
PROJECT ENGINEER

John Lansford, PE
PROJECT DESIGN ENGINEER

HYDRAULICS ENGINEER

SIGNATURE: P.E.

ROADWAY DESIGN ENGINEER

NORTH CAROLINA PROFESSIONAL SEAL 15435 ENGINEER JOHN C. LANSFORD 10/13/04

SIGNATURE: P.E.

DIVISION OF HIGHWAYS STATE OF NORTH CAROLINA

STATE DESIGN ENGINEER P.E.

DEPARTMENT OF TRANSPORTATION FEDERAL HIGHWAY ADMINISTRATION

APPROVED
DIVISION ADMINISTRATOR DATE

PROJECT REFERENCE NO.	SHEET NO.
112J04401	1A

ROADWAY DESIGN ENGINEER

NORTH CAROLINA PROFESSIONAL SEAL 15432 ENGINEER JOHN C. LANSFORD
10/13/04

STATE OF NORTH CAROLINA
DIVISION OF HIGHWAYS

C201320
HAYWOOD COUNTY

INDEX OF SHEETS

SHEET NUMBER	SHEET
1	TITLE SHEET
1-A	INDEX OF SHEETS, GENERAL NOTES, AND LIST OF STANDARDS
1-B	CONVENTIONAL SYMBOLS
2 THRU 2-A	PAVEMENT SCHEDULE & TYPICAL SECTIONS
2-B	DETAIL FOR GRADING SUBGRADE
2-C THRU 2-F	DETAIL FOR PRECAST REINFORCED CONCRETE BARRIER
2-G	DETAIL FOR GRAU B-77
2-H THRU 2-K	DETAIL FOR GUARDRAIL INSTALLATION
2-L	DETAIL OF TRAFFIC BEARING JUNCTION BOX WITH MANHOLE STRUCTURE #7
2-M	DETAIL OF TRAFFIC BEARING JUINCTION BOX WITH MANHOLE STRUCTURE #9
2-N	DETAIL FOR TRAFFIC DRUMS
2-O THRU 2-P	DETAIL FOR PERMANENT ANCHOR TIEBACK RETAINING WALL AT SLIDE #1
2-Q THRU 2-R	DETAIL FOR PERMANENT ANCHOR TIEBACK RETAINING WALL AT SLIDE #2
2-S THRU 2-V	DETAIL FOR TOE SCOUR PROTECTION
3	SUMMARY OF QUANTITIES
3-A	EARTHWORK SUMMARY
4 THRU 5	PLAN SHEET
6 THRU 7	WALL AND TOE SCOUR ENVELOPES
X-1 THRU X-64	CROSS SECTIONS

GENERAL NOTES: 2002 SPECIFICATIONS
EFFECTIVE: 01-15-02

GRADE LINE:
GRADING AND SURFACING OR RESURFACING AND WIDENING:

THE GRADE LINES SHOWN DENOTE THE FINISHED ELEVATION OF THE PROPOSED SURFACING AT GRADE POINTS SHOWN ON THE TYPICAL SECTIONS. WHERE NO GRADE LINES ARE SHOWN, THE PROFILES SHOWN DENOTE THE TOP ELEVATION OF THE EXISTING PAVEMENT ALONG THE CENTER LINE OF SURVEY ON WHICH THE PROPOSED RESURFACING WILL BE PLACED. GRADE LINES MAY BE ADJUSTED BY THE ENGINEER IN ORDER TO SECURE A PROPER TIE-IN.

CLEARING:

CLEARING ON THIS PROJECT SHALL BE PERFORMED TO THE LIMITS ESTABLISHED BY METHOD **II**.

SUPERELEVATION:

ALL CURVES ON THIS PROJECT SHALL BE SUPERELEVATED IN ACCORDANCE WITH **STD. NO. 225.05** USING THE RATE OF SUPERELEVATION AND RUNOFF SHOWN ON THE PLANS. SUPERELEVATION IS TO BE REVOLVED ABOUT THE GRADE POINTS SHOWN ON THE TYPICAL SECTIONS.

SHOULDER CONSTRUCTION:

ASPHALT AND EARTH SHOULDER CONSTRUCTION ON HIGH SIDE OF SUPERELEVATED CURVES SHALL BE IN ACCORDANCE WITH **STD. NO. 560.02.**

GUARDRAIL:

THE GUARDRAIL LOCATIONS SHOWN ON THE PLANS MAY BE ADJUSTED DURING CONSTRUCTION AS DIRECTED BY THE ENGINEER. THE CONTRACTOR SHOULD CONSULT WITH THE ENGINEER PRIOR TO ORDERING GUARDRAIL MATERIAL.

TEMPORARY SHORING:

SHORING REQUIRED FOR THE MAINTENANCE OF TRAFFIC WILL BE PAID FOR AS "EXTRA WORK" IN ACCORDANCE WITH SECTION 104-7.

EFF. 01-15-02

ROADWAY ENGLISH STANDARD DRAWINGS

The following Roadway Standards as they appear in "Roadway Standard Drawings" Highway Design Branch - N. C. Department of Transportation - Raleigh, N. C., Dated January 15, 2002 are applicable to this project and by reference hereby are considered a part of these plans:

STD.NO.	TITLE
	DIVISION 2 - EARTHWORK
200.02	Method of Clearing - Method II
225.05	Method of Obtaining Superelevation - Divided Highways
	DIVISION 3 - PIPE CULVERTS
300.01	Method of Pipe Installation - Method `A'
	DIVISION 5 - SUBGRADE, BASES AND SHOULDERS
560.02	Method of Shoulder Construction - High Side of Superelevated Curve - Method II
	DIVISION 6 - ASPHALT BASES AND PAVEMENTS
665.01	Milled Rumble Strips - Asphalt Pavements
	DIVISION 8 - INCIDENTALS
816.04	Markers for Drainage Structure and Concrete Pad
840.00	Concrete Base Pad for Drainage Structures
840.18	Concrete Median Drop Inlet Type `B' - 12" thru 36" Pipe
840.27	Brick Median Drop Inlet Type `B' - 12" thru 36" Pipe
840.31	Concrete Junction Box - 12" thru 66" Pipe
840.32	Brick Junction Box - 12" thru 66" Pipe
840.34	Traffic Bearing Junction Box - for Use with Pipes 42" and Under
840.37	Steel Grate and Frame
840.54	Manhole Frame and Cover
840.66	Drainage Structure Steps
840.72	Pipe Collar
846.01	Concrete Curb, Gutter and Curb & Gutter
862.01	Guardrail Placement
876.02	Guide for Rip Rap at Pipe Outlets

5/28/99
13-OCT-2004 09:22
R:\Roadway\Proj\440_rdy_tsh.dgn
JBMauney AT RD203033

PROJECT REFERENCE NO.	SHEET NO.
112J04401	1B

Note: Not to Scale

S.U.E. = Subsurface Utility Engineering

STATE OF NORTH CAROLINA
DIVISION OF HIGHWAYS

CONVENTIONAL PLAN SHEET SYMBOLS

BOUNDARIES AND PROPERTY:

- State Line
- County Line
- Township Line
- City Line
- Reservation Line
- Property Line
- Existing Iron Pin — EIP
- Property Corner
- Property Monument — ECM
- Parcel/Sequence Number — 123
- Existing Fence Line
- Proposed Woven Wire Fence
- Proposed Chain Link Fence
- Proposed Barbed Wire Fence
- Existing Wetland Boundary — WLB
- Proposed Wetland Boundary — WLB
- Existing High Quality Wetland Boundary — HQ WLB
- Existing Endangered Animal Boundary — EAB
- Existing Endangered Plant Boundary — EPB

BUILDINGS AND OTHER CULTURE:

- Gas Pump Vent or U/G Tank Cap
- Sign — S
- Well — W
- Small Mine
- Foundation
- Area Outline
- Cemetery
- Building
- School
- Church
- Dam

HYDROLOGY:

- Stream or Body of Water
- Hydro, Pool or Reservoir
- River Basin Buffer — RBB
- Flow Arrow
- Disappearing Stream
- Spring
- Swamp Marsh
- Proposed Lateral, Tail, Head Ditch — FLOW
- False Sump

RAILROADS:

- Standard Guage — CSX TRANSPORTATION
- RR Signal Milepost — MILEPOST 35
- Switch — SWITCH
- RR Abandoned
- RR Dismantled

RIGHT OF WAY:

- Baseline Control Point
- Existing Right of Way Marker
- Existing Right of Way Line
- Proposed Right of Way Line — RW
- Proposed Right of Way Line with Iron Pin and Cap Marker — RW
- Proposed Right of Way Line with Concrete or Granite Marker — RW
- Existing Control of Access — CA
- Proposed Control of Access — CA
- Existing Easement Line — E
- Proposed Temporary Construction Easement — E
- Proposed Temporary Drainage Easement — TDE
- Proposed Permanent Drainage Easement — PDE
- Proposed Permanent Utility Easement — PUE

ROADS AND RELATED FEATURES:

- Existing Edge of Pavement
- Existing Curb
- Proposed Slope Stakes Cut — C
- Proposed Slope Stakes Fill — F
- Proposed Wheel Chair Ramp — WCR
- Curb Cut for Future Wheel Chair Ramp — CCFR
- Existing Metal Guardrail
- Proposed Guardrail
- Existing Cable Guiderail
- Proposed Cable Guiderail
- Equaility Symbol
- Pavement Removal

VEGETATION:

- Single Tree
- Single Shrub
- Hedge
- Woods Line
- Orchard
- Vineyard — Vineyard

EXISTING STRUCTURES:

MAJOR:

- Bridge, Tunnel or Box Culvert — CONC
- Bridge Wing Wall, Head Wall and End Wall — CONC WW

MINOR:

- Head and End Wall — CONC HW
- Pipe Culvert
- Footbridge
- Drainage Box: Catch Basin, DI or JB — CB
- Paved Ditch Gutter
- Storm Sewer Manhole — S
- Storm Sewer — S

UTILITIES:

POWER:

- Existing Power Pole
- Proposed Power Pole
- Existing Joint Use Pole
- Proposed Joint Use Pole
- Power Manhole — P
- Power Line Tower
- Power Transformer
- U/G Power Cable Hand Hole — HH
- H-Frame Pole
- Recorded U/G Power Line — P
- Designated U/G Power Line (S.U.E.*) — P

TELEPHONE:

- Existing Telephone Pole
- Proposed Telephone Pole
- Telephone Manhole — T
- Telephone Booth
- Telephone Pedestal — T
- Telephone Cell Tower
- U/G Telephone Cable Hand Hole — HH
- Recorded U/G Telephone Cable — T
- Designated U/G Telephone Cable (S.U.E.*) — T
- Recorded U/G Telephone Conduit — TC
- Designated U/G Telephone Conduit (S.U.E.*) — TC
- Recorded U/G Fiber Optics Cable — T FO
- Designated U/G Fiber Optics Cable (S.U.E.*) — T FO

WATER:

- Water Manhole — W
- Water Meter
- Water Valve
- Water Hydrant
- Recorded U/G Water Line — W
- Designated U/G Water Line (S.U.E.*) — W
- Above Ground Water Line — A/G Water

TV:

- TV Satellite Dish
- TV Pedestal — C
- TV Tower
- U/G TV Cable Hand Hole — HH
- Recorded U/G TV Cable — TV
- Designated U/G TV Cable (S.U.E.*) — TV
- Recorded U/G Fiber Optic Cable — TV FO
- Designated U/G Fiber Optic Cable (S.U.E.*) — TV FO

GAS:

- Gas Valve
- Gas Meter
- Recorded U/G Gas Line — G
- Designated U/G Gas Line (S.U.E.*) — G
- Above Ground Gas Line — A/G Gas

SANITARY SEWER:

- Sanitary Sewer Manhole
- Sanitary Sewer Cleanout
- U/G Sanitary Sewer Line — SS
- Above Ground Sanitary Sewer — A/G Sanitary Sewer
- Recorded SS Forced Main Line — FSS
- Designated SS Forced Main Line (S.U.E.*) — FSS

MISCELLANEOUS:

- Utility Pole
- Utility Pole with Base
- Utility Located Object
- Utility Traffic Signal Box — S
- Utility Unknown U/G Line — ?UTL
- U/G Tank; Water, Gas, Oil
- A/G Tank; Water, Gas, Oil
- U/G Test Hole (S.U.E.*)
- Abandoned According to Utility Records — AATUR
- End of Information — E.O.I.

PROJECT REFERENCE NO.	SHEET NO.
112104401	2
ROADWAY DESIGN ENGINEER	PAVEMENT DESIGN ENGINEER

NORTH CAROLINA PROFESSIONAL SEAL 15485 ENGINEER JOHN C. LANSFORD 10/13/04

NORTH CAROLINA PROFESSIONAL SEAL 13369 ENGINEER JOHN-CHI CHEN 10/13/04

PAVEMENT SCHEDULE

A	PROP. 9" UNREINFORCED CONCRETE
C1	PROP. APPROX. 2" ASPHALT CONC. SURF. COURSE, TYPE S12.5D, AT AN AVERAGE RATE OF 224 LBS. PER SQ. YD.
C2	PROP. APPROX. 4" ASPHALT CONC. SURF. COURSE, TYPE S12.5D, AT AN AVERAGE RATE OF 224 LBS. PER SQ. YD., IN EACH OF TWO LAYERS
D	PROP. APPROX. 3" ASPHALT CONC. INTERMEDIATE COURSE, TYPE I19.0D, AT AN AVERAGE RATE OF 342 LBS. PER SQ. YD.
E1	PROP. APPROX. 13.5" ASPHALT CONC. BASE COURSE, TYPE B25.0C, AT AN AVERAGE RATE OF 513 LBS. PER SQ. YD., IN EACH OF THREE LAYERS
E2	PROP. APPROX. 11.5" ASPHALT CONC. BASE COURSE, TYPE B25.0C, AT AN AVERAGE RATE OF 437 LBS. PER SQ. YD., IN EACH OF THREE LAYERS
E3	PROP. VAR. DEPTH ASPHALT CONCRETE BASE COURSE, TYPE B25.0C, AT AN AVERAGE RATE OF 114 LBS PER SQ. YD. PER 1" IN DEPTH, TO BE PLACED IN LAYERS NOT GREATER THAN 5.5" OR LESS THAN 3" IN DEPTH.
R1	PROPOSED SINGLE FACED CONCRETE BARRIER
R2	EXISTING CONCRETE MEDIAN BARRIER
R3	PROPOSED CONCRETE SHOULDER BERM GUTTER
T	EARTH MATERIAL
U	EXISTING PAVEMENT
V	MILLING OF EXISTING ASPHALT PAVEMENT TO A DEPTH OF 2"

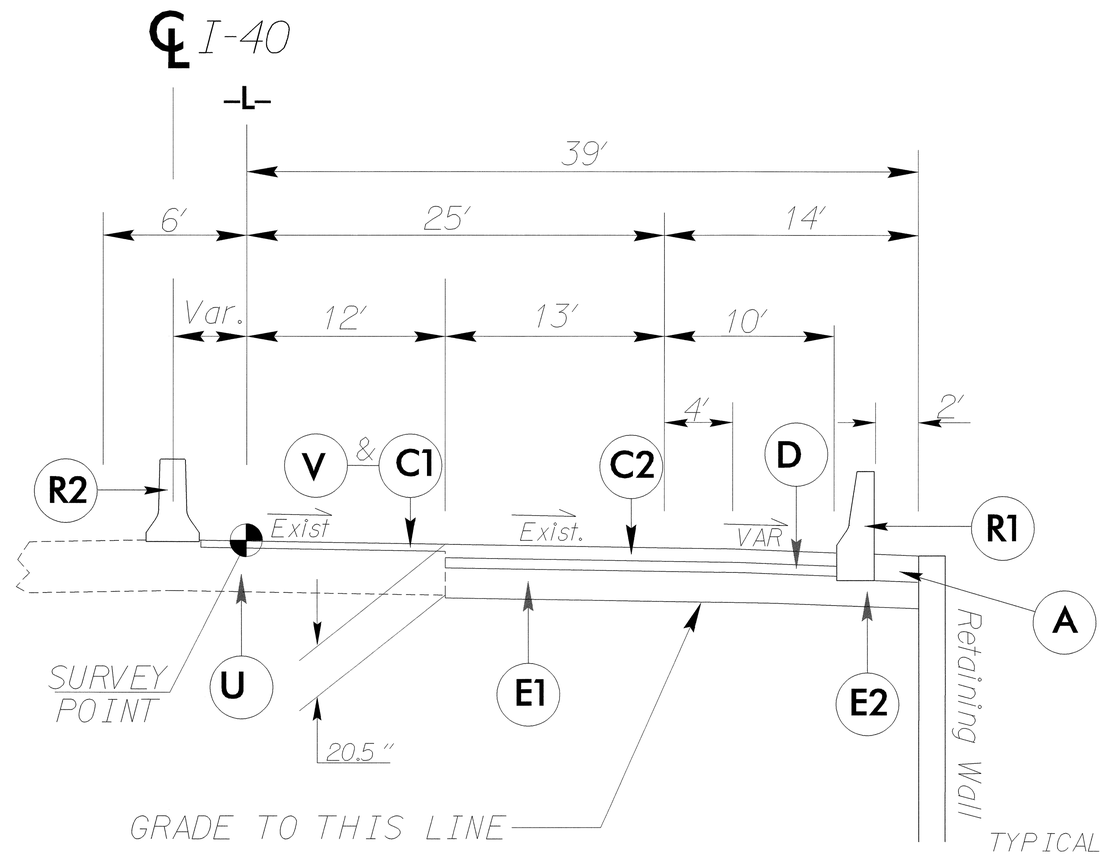

TYPICAL SECTION NO. 1

STA. 17+00 to 22+25 -L-

TYPICAL SECTION NO. 1

6/2/99

13-OCT-2004 07:51
R:\Roadway\Proj\i40_rdy_typ.dgn
JBMauney AT

PROJECT REFERENCE NO.	SHEET NO.
112J04401	2-A

ROADWAY DESIGN ENGINEER: NORTH CAROLINA PROFESSIONAL SEAL 18439 ENGINEER JOHN C. LANSFORD 10/13/04

PAVEMENT DESIGN ENGINEER: NORTH CAROLINA PROFESSIONAL SEAL 13368 ENGINEER JOHN-CHI CHEN 10/13/04

PAVEMENT SCHEDULE

A	PROP. 9" UNREINFORCED CONCRETE
C1	PROP. 2" TYPE S12.5D
C2	PROP. 4" TYPE S12.5D
D	PROP. 3" TYPE I19.0D
E1	PROP. 13.5" TYPE B25.0C
E2	PROP. 11.5" TYPE B25.0C
E3	VAR. DEPTH TYPE B25.0C
R1	PROPOSED SINGLE FACED CONCRETE BARRIER
R2	EXISTING CONCRETE MEDIAN BARRIER
R3	PROPOSED SHOULDER BERM GUTTER
T	EARTH MATERIAL
U	EXISTING PAVEMENT
V	2" ASPHALT PAVEMENT MILLING

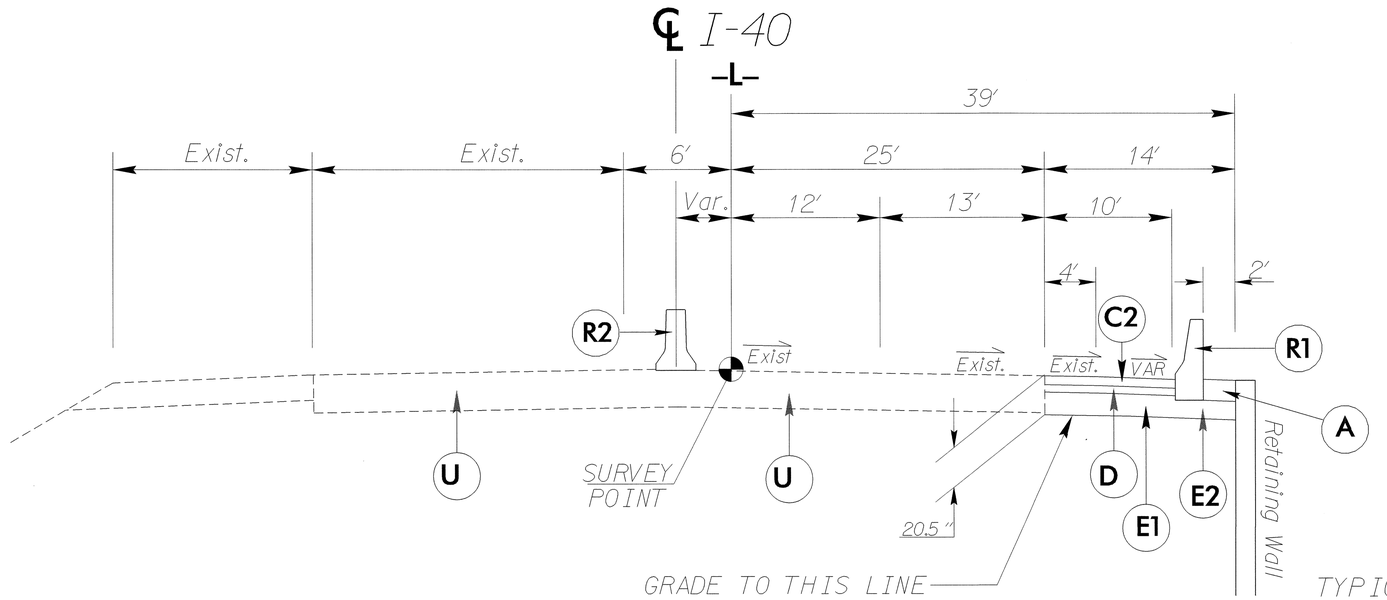

TYPICAL SECTION NO.2

TYPICAL SECTION NO.2

STA. 33+00 to 35+00 -L-

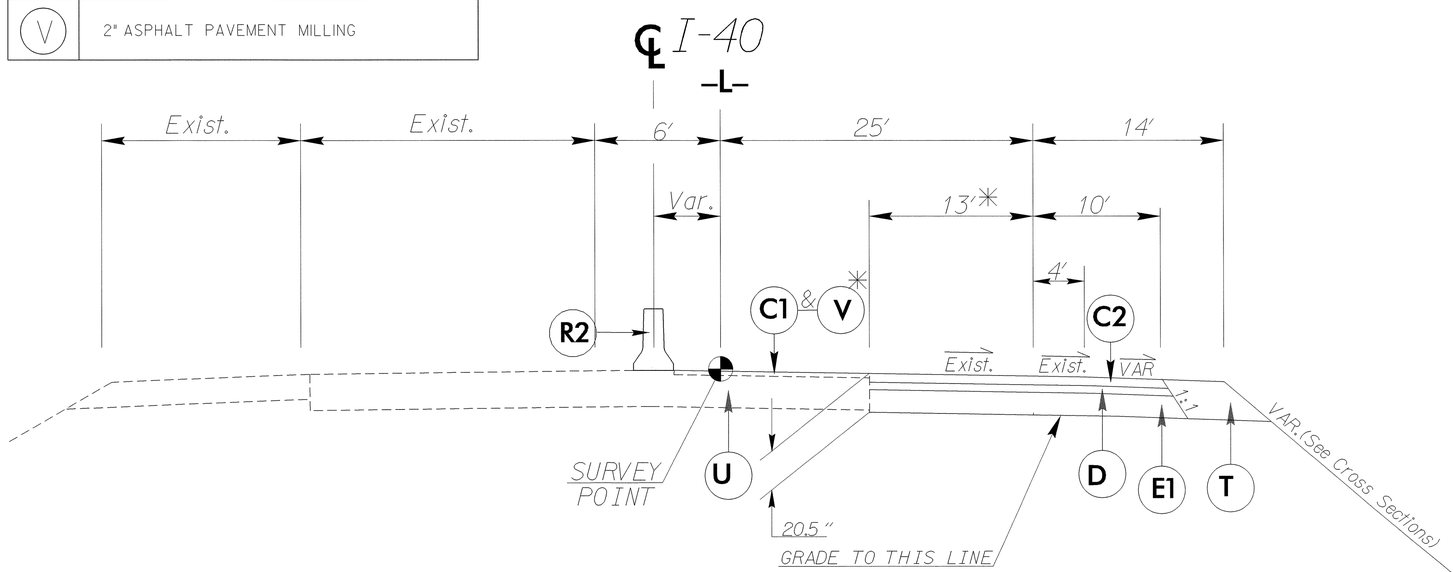

TYPICAL SECTION NO.3

TYPICAL SECTION NO.3

✳ Sta. 14+25 to 17+00 -L-
✳ Sta. 22+25 to 22+75 -L-
Sta. 32+25 to 33+00 -L-
Sta. 35+00 to 35+50 -L-

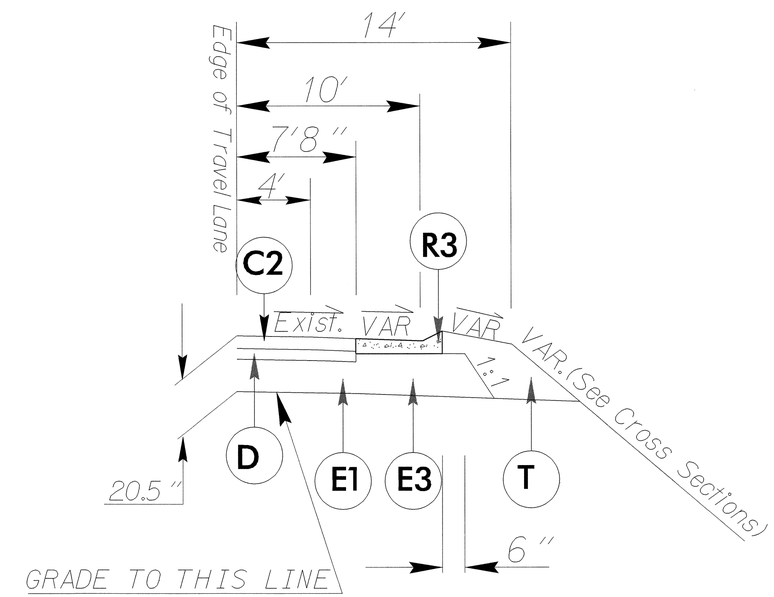

USE WITH TYPICAL SECTION NO.3

Sta. 16+25 to 17+00 -L-

6/2/99

3-OCT-2004 07:51
R:\Roadway\Proj\u140_rdy_typ.dgn
JBMauney AT RD203033

PROJECT REFERENCE NO.	SHEET NO.
112104401	5
R/W SHEET NO.	
ROADWAY DESIGN ENGINEER	HYDRAULICS ENGINEER

NORTH CAROLINA PROFESSIONAL SEAL 15473 ENGINEER JOHN C. LANSFORD
10/13/04

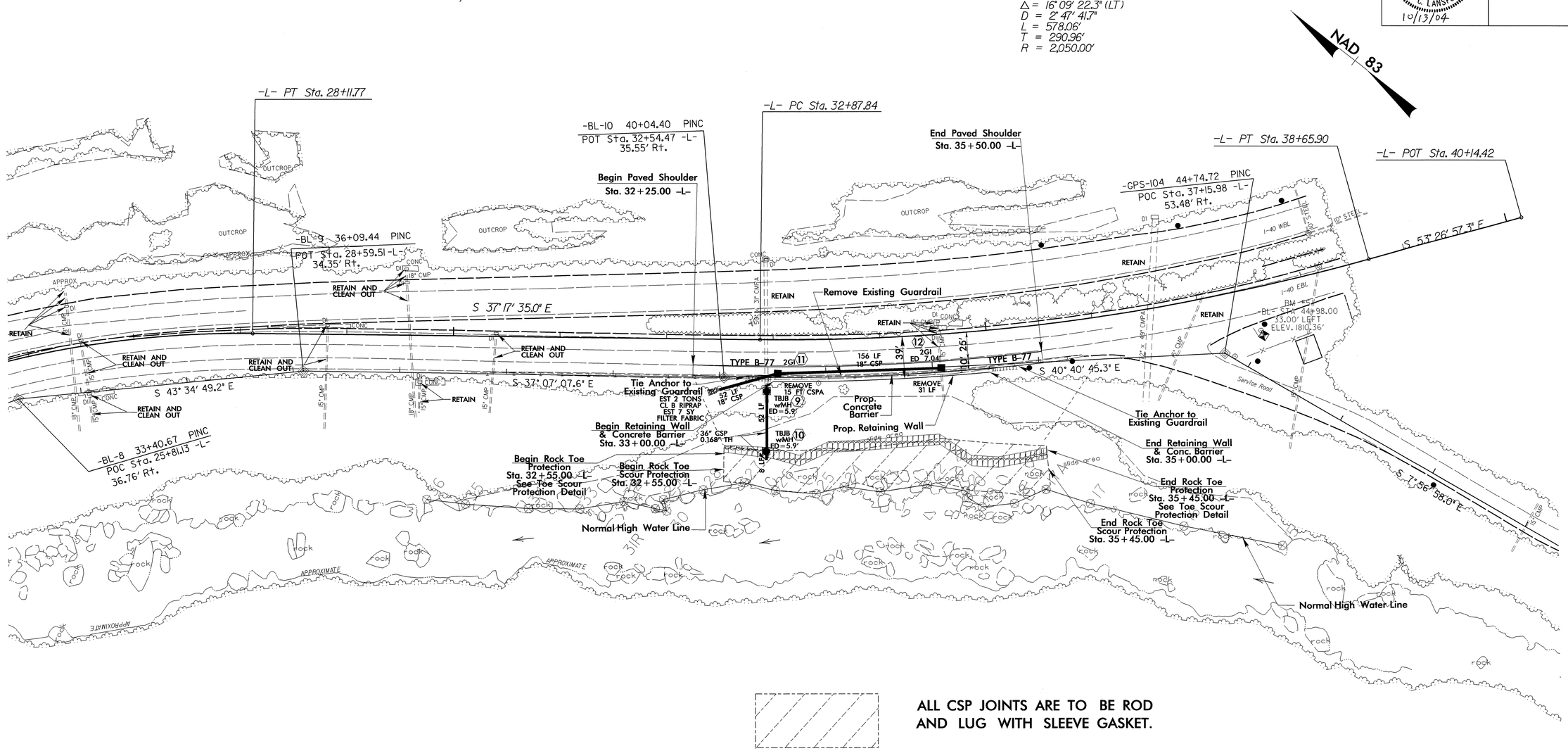

ALL CSP JOINTS ARE TO BE ROD AND LUG WITH SLEEVE GASKET.

Proposed Toe Scour Protection

SEE DETAIL SHEET 2-M FOR STRUCTURE #9

5/14/99

13-OCT-2004 08:53
R:\Roadway\Proj\140_rdy_psh05.dgn
JBMauney AT RD203033

RD203033 Wednesday October 13 2004 psh05 JBMauney rd-07oce34

2-T

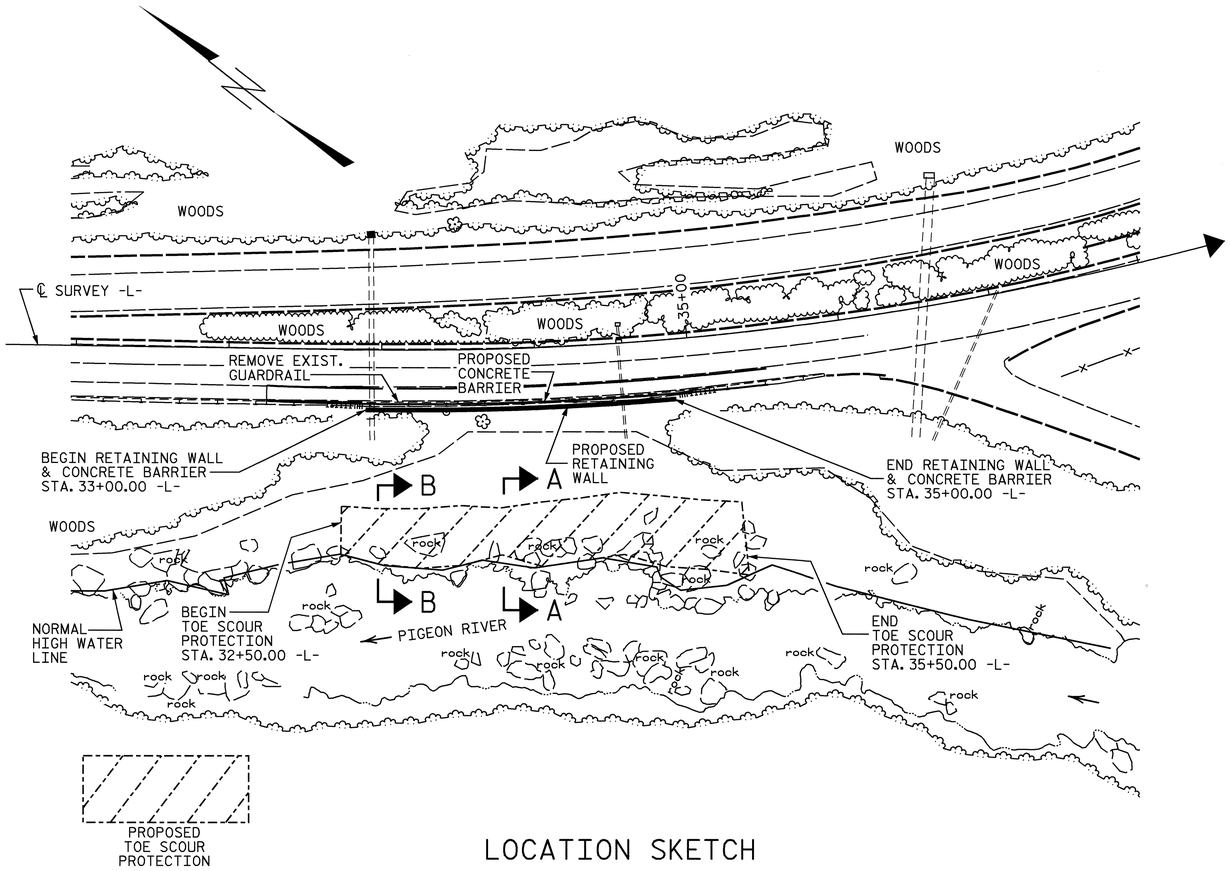

LOCATION SKETCH

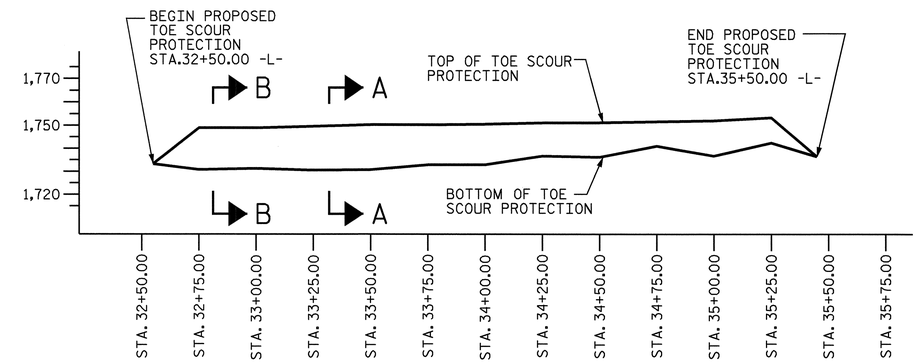

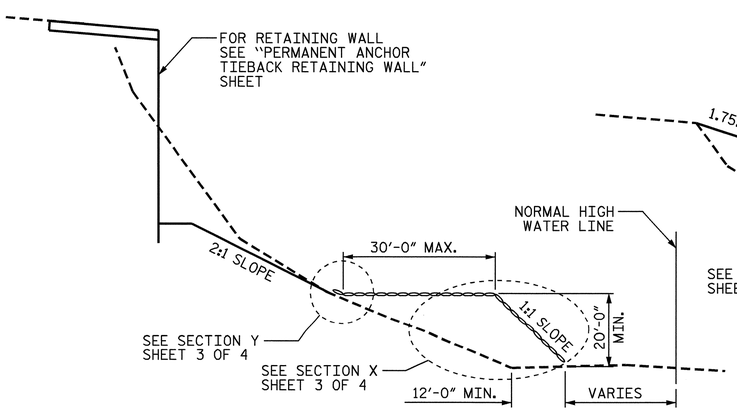

SECTION A-A

N.T.S.

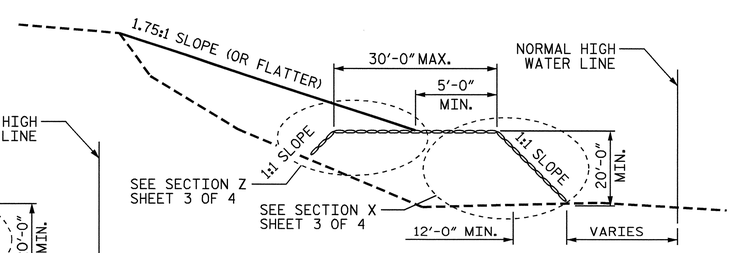

SECTION B-B

N.T.S.

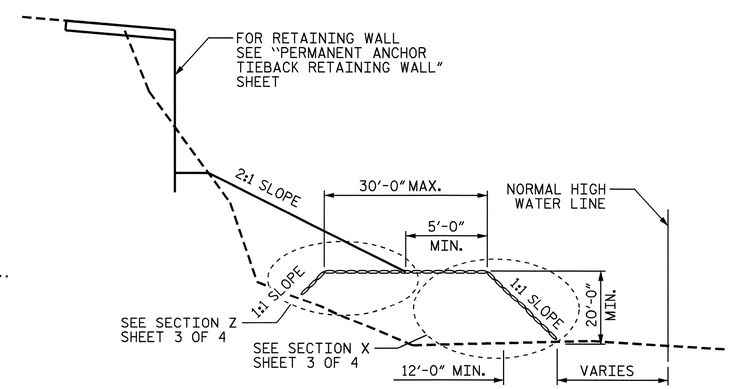

SECTION C-C

N.T.S.

NORTH CAROLINA PROFESSIONAL SEAL 023480 10-15-04 ENGINEER JOHN S. W. FARGHER

PROJECT NO. 112.104401

HAYWOOD COUNTY

STATION: 32+50 TO 35+50

SHEET 2 OF 4

STATE OF NORTH CAROLINA
DEPARTMENT OF TRANSPORTATION
RALEIGH

TOE SCOUR PROTECTION

REVISIONS						SHEET NO.
NO.	BY:	DATE:	NO.	BY:	DATE:	
1			3			TOTAL SHEETS
2			4			

DRAWN BY : M.A. ALLEN DATE : 10-04
CHECKED BY : J.S. FARGHER DATE : 10-04

13-OCT-2004 08:40
W:\landslide\140slide_sd_TSP.dgn
mallen

NC005

2-U

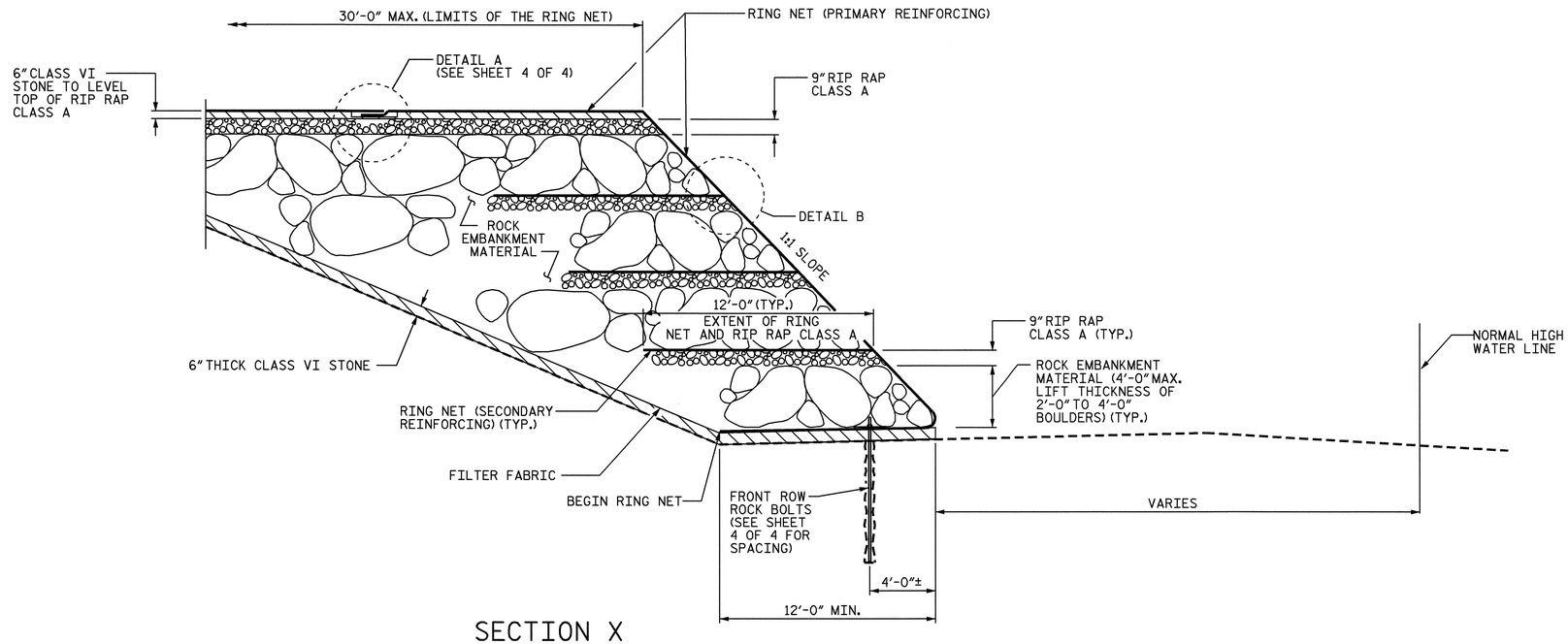

SECTION X

N.T.S.

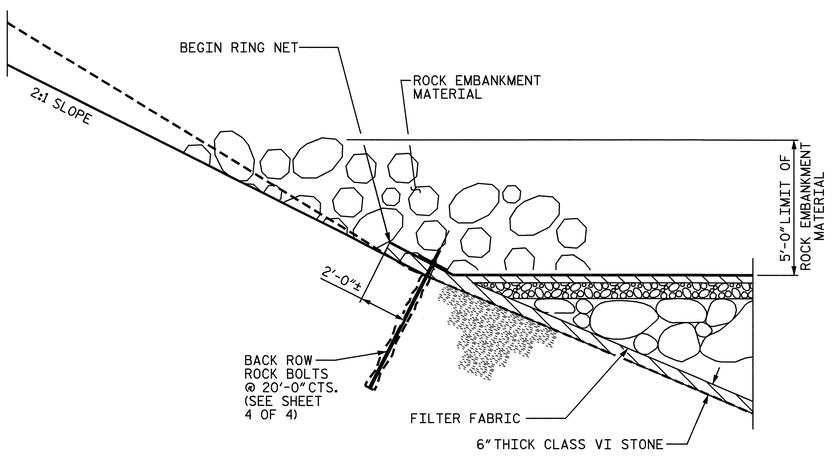

SECTION Y

N.T.S.

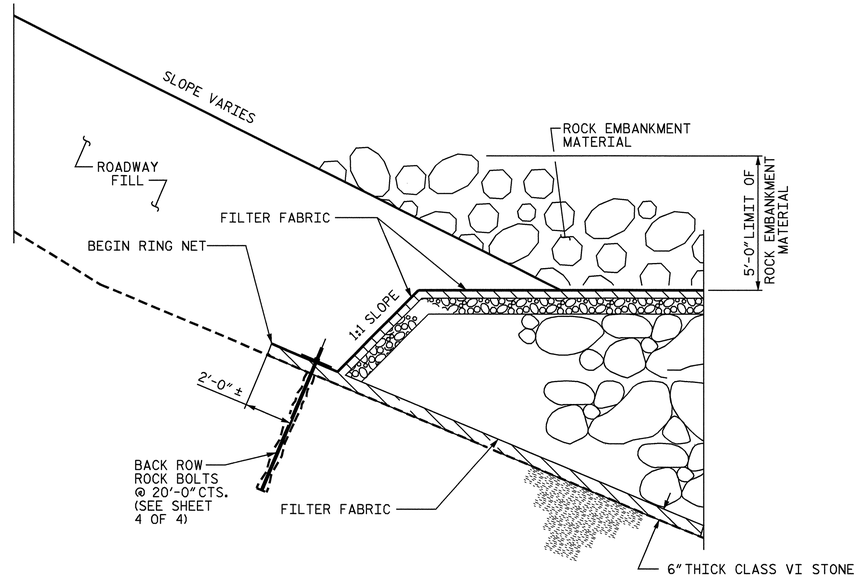

SECTION Z

N.T.S.

PROJECT NO. 112.104401

HAYWOOD COUNTY

STATION: 14+75 TO 35+50

SHEET 3 OF 4

STATE OF NORTH CAROLINA
DEPARTMENT OF TRANSPORTATION
RALEIGH

TOE SCOUR PROTECTION

REVISIONS						SHEET NO.
NO.	BY:	DATE:	NO.	BY:	DATE:	
1			3			TOTAL SHEETS
2			4			

DRAWN BY : M.A. ALLEN DATE : 10-04
CHECKED BY : J.S. FARGHER DATE : 10-04

13-OCT-2004 08:41
W:\landslide\140slide_sd_TSP.dgn
maallen

2-V

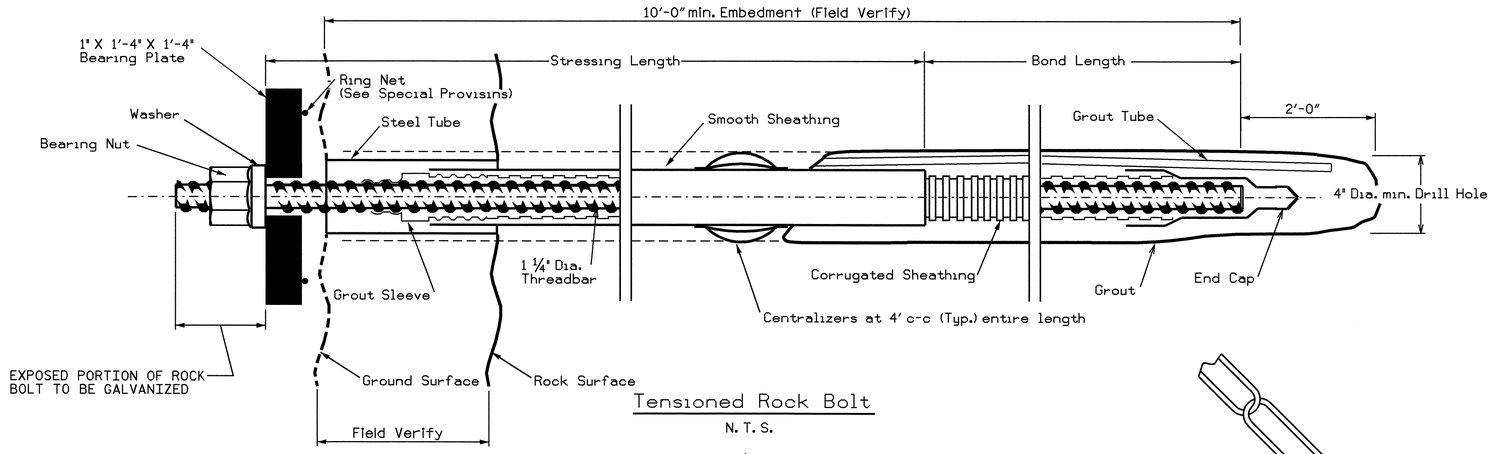

Tensioned Rock Bolt

N. T. S.

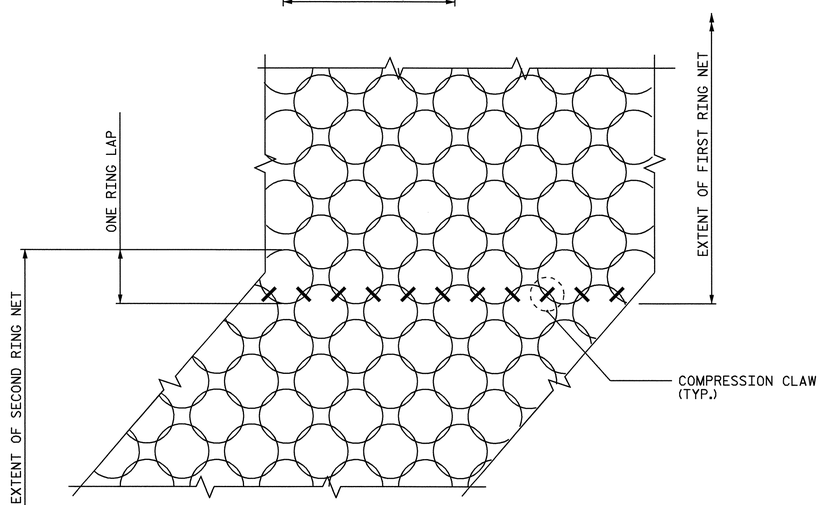

DETAIL A

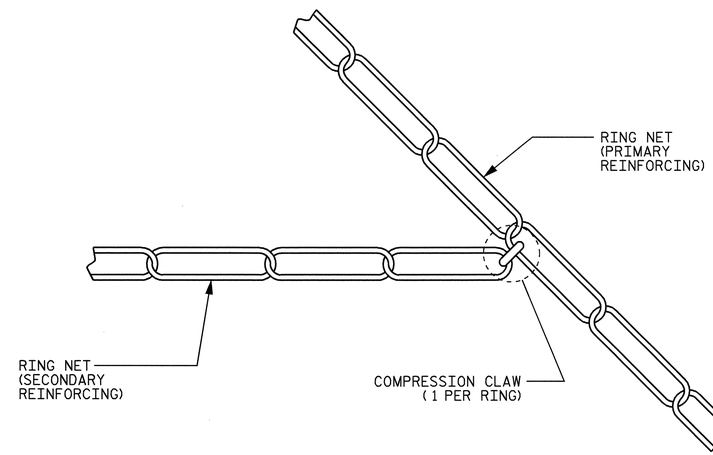

DETAIL B

NOTES:

STABILIZE UPPER SLOPE BEFORE BEGINNING WORK ON THE TOE SCOUR PROTECTION.

CONSTRUCT TOE SCOUR PROTECTION ACCORDING TO THE SPECIAL PROVISIONS, DETAILS, PLANS, AND AS DIRECTED BY THE ENGINEER.

SEE SPECIAL PROVISIONS FOR TOE SCOUR PROTECTION.

SEE SPECIAL PROVISIONS FOR TENSIONED ROCK BOLTS.

PAYMENT FOR THE COMPRESSION CLAWS WILL BE INCLUDED IN THE COST OF THE RING NET.

USE 10'-0" SPACING FOR FRONT ROW ROCK BOLTS FROM STA. 21+75 TO 22+25 AND STA. 35+00 TO 35.50.

USE 20'-0" SPACING FOR FRONT ROW ROCK BOLTS FROM STA. 17+75 TO 21+75 AND STA. 32+50 TO 35.00.

CONSTRUCTION SEQUENCE:

1. CLEAR AREA OF DEBRIS. LEVEL LOCATION OF THE RING NETS.
2. INSTALL FRONT ROW TENSIONED ROCK BOLTS AS SHOWN ON THE PLANS. DO NOT INSTALL BEARING PLATE ASSEMBLY OR TENSION THE ROCK BOLTS.
3. PLACE 6 INCH LAYER OF SELECT MATERIAL, CLASS VI (#57 STONE).
4. PLACE FILTER FABRIC AS SHOWN ON THE PLANS.
5. PLACE RING NET FOR PRIMARY REINFORCEMENT.
6. INSTALL BEARING PLATE ASSEMBLY AND TENSION ROCK BOLTS.
7. PLACE ROCK EMBANKMENT MATERIAL IN 4 FOOT THICK LIFTS. END DUMPING ON RING NETS WILL NOT BE ALLOWED.
8. PLACE RIP RAP, CLASS A MATERIAL ON TOP OF LIFT TO LEVEL.
9. PLACE RING NET FOR SECONDARY REINFORCEMENT AND CONNECT TO FACE.
10. REPEAT STEPS 7 THROUGH 9, AS NECESSARY, TO THE TOP OF THE TOE SCOUR PROTECTION STAGGERING THE FACE AT A BATTER OF 1:1 (H:V).
11. INSTALL TOP LAYER OF RING NETS.
12. INSTALL BACK ROW TENSIONED ROCK BOLTS AS SHOWN ON THE PLANS.
13. PLACE SELECT MATERIAL, CLASS VI (#57 STONE) TO LEVEL UPPER LAYER.
14. PLACE ADDITIONAL FILTER FABRIC AS SHOWN ON THE PLANS.

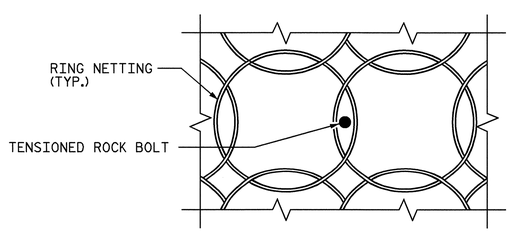

ROCK BOLT PLACEMENT

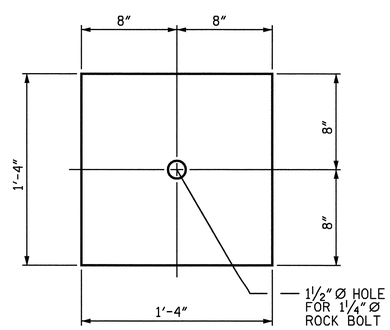

BEARING PLATE

(1" X 1'-4" X 1'-4" GALVANIZED PLATE)

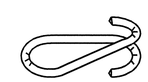

TECCO COMPRESSION CLAW

PROJECT NO. 112.104401

HAYWOOD COUNTY

STATION: 14+75 TO 35+50

SHEET 4 OF 4

STATE OF NORTH CAROLINA
DEPARTMENT OF TRANSPORTATION
RALEIGH

TOE SCOUR PROTECTION

REVISIONS						SHEET NO.
NO.	BY:	DATE:	NO.	BY:	DATE:	
1			3			TOTAL SHEETS
2			4			

DRAWN BY : M.A. ALLEN DATE : 10-04
CHECKED BY : J.S. FARGHER DATE : 10-04

13-OCT-2004 08:41
W:\landslide\140slide_sd_TSP.dgn
maallen

NCBDS

PROJECT REFERENCE NO.	SHEET NO.
112104401	4
R/W SHEET NO.	
ROADWAY DESIGN ENGINEER	HYDRAULICS ENGINEER

NORTH CAROLINA PROFESSIONAL SEAL 15035 ENGINEER JOHN C. LANSFORD 10/13/04

ALL CSP JOINTS ARE TO BE ROD AND LUG WITH SLEEVE GASKET.

SEE DETAIL SHEET 2-L FOR STRUCTURE #7

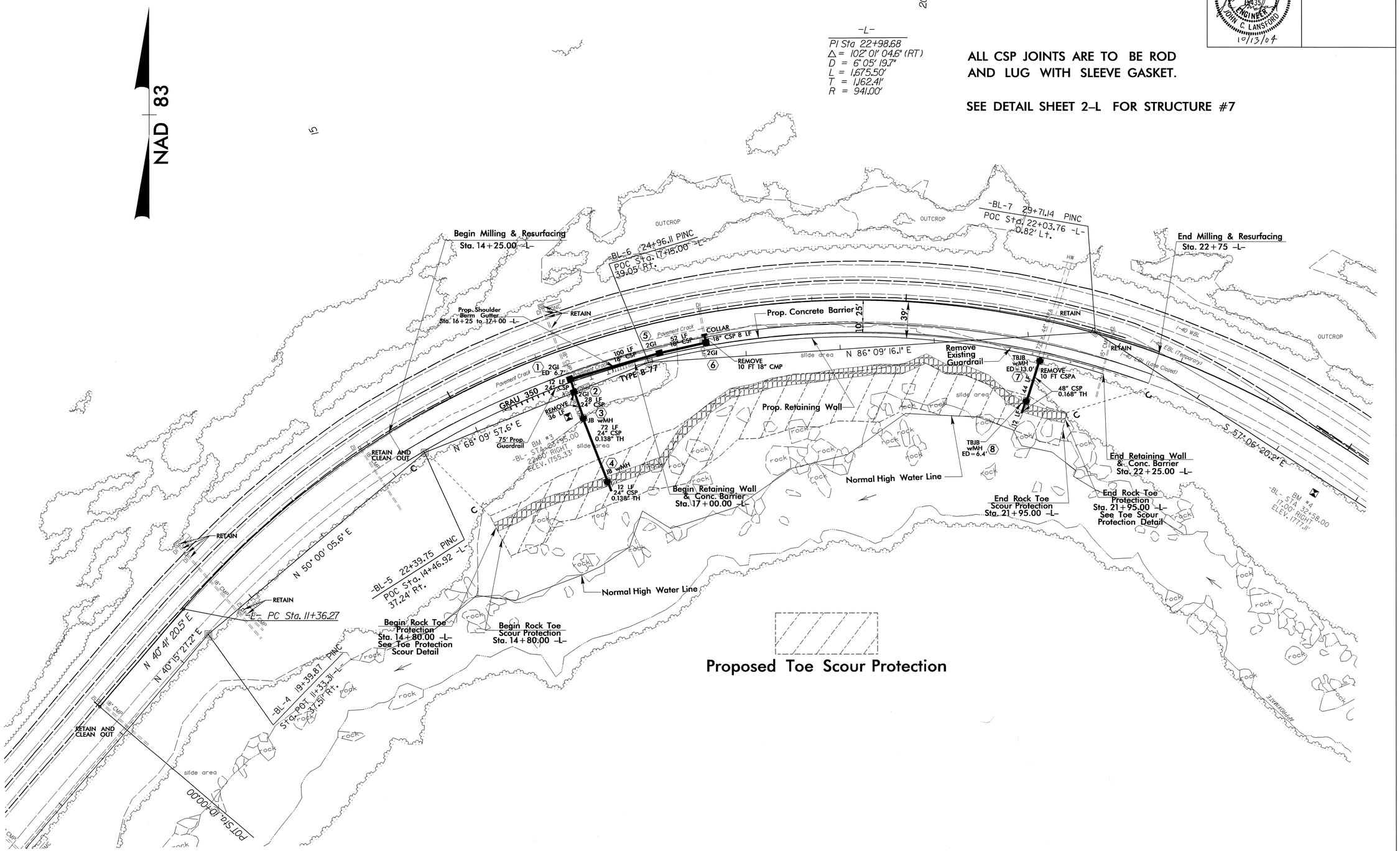

13-OCT-2004 08:53
R:\Roadway\Proj\40_rdy_psh04.dgn
JBMauney AT RD203033

RD203033 Wednesday October 13 2004 psh04 JBMauney rd-07oce34

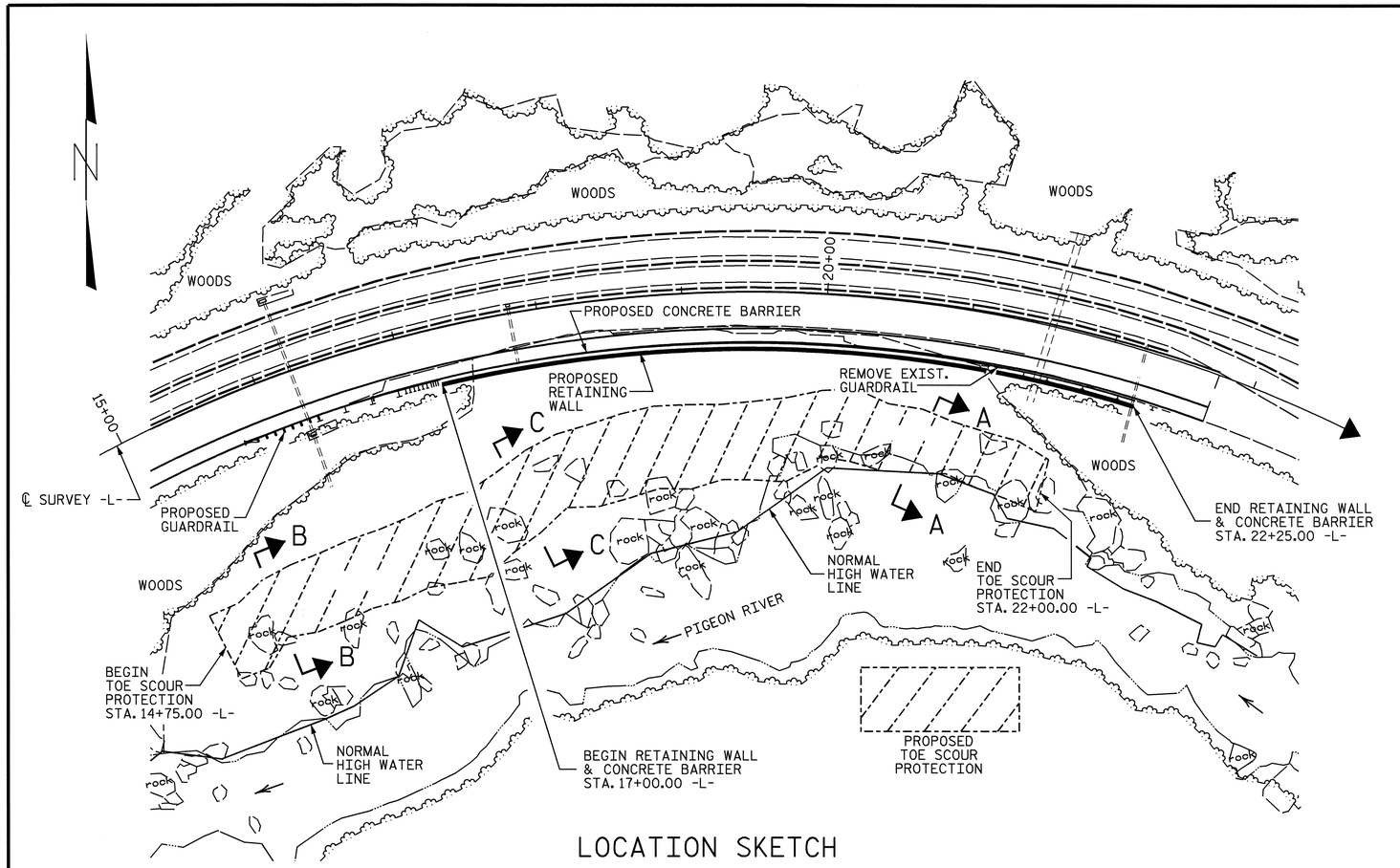

LOCATION SKETCH

ESTIMATED QUANTITIES	
DESCRIPTION	QUANTITY
ROCK EMBANKMENT MATERIAL	14,000 TONS
RIP RAP, CLASS A	3,000 TONS
SELECT MATERIAL, CLASS VI	1,500 TONS
FILTER FABRIC	5,500 SQUARE YARDS
RING NET	12,000 SQUARE YARDS
TENSIONED ROCK BOLT	2,000 LINEAR FEET

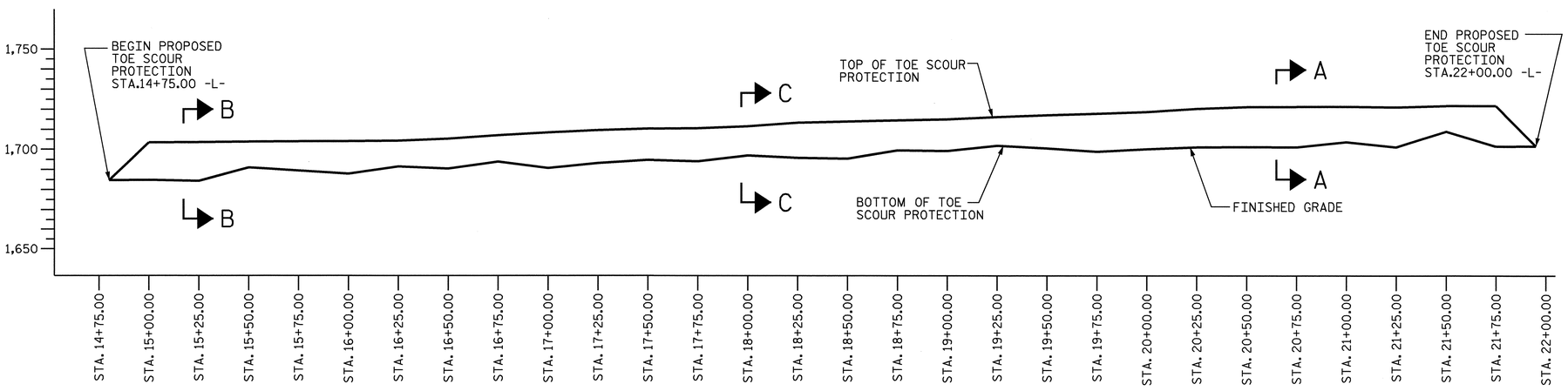

FOR SECTIONS A-A, B-B & C-C SEE SHEET 2 OF 4

NORTH CAROLINA PROFESSIONAL ENGINEER SEAL 025786 10-18-04 JOHN S. W. FARGHER

PROJECT NO. 112.104401
HAYWOOD COUNTY
STATION: 14+75 TO 22+00

SHEET 1 OF 4

STATE OF NORTH CAROLINA
DEPARTMENT OF TRANSPORTATION
RALEIGH

TOE SCOUR PROTECTION

REVISIONS						SHEET NO.
NO.	BY:	DATE:	NO.	BY:	DATE:	
1			3			TOTAL SHEETS
2			4			

DRAWN BY : M.A. ALLEN DATE : 10-04
CHECKED BY : J.S. FARGHER DATE : 10-04

13-OCT-2004 08:40
W:\landslide\140slide_sd_TSP.dgn
mallen

NCDDS

PROJECT REFERENCE NO.	SHEET NO.
112J04401	7
ROADWAY DESIGN ENGINEER	HYDRAULICS ENGINEER

NORTH CAROLINA PROFESSIONAL SEAL 15635 ENGINEER JOHN C. LANSFORD 10/13/04

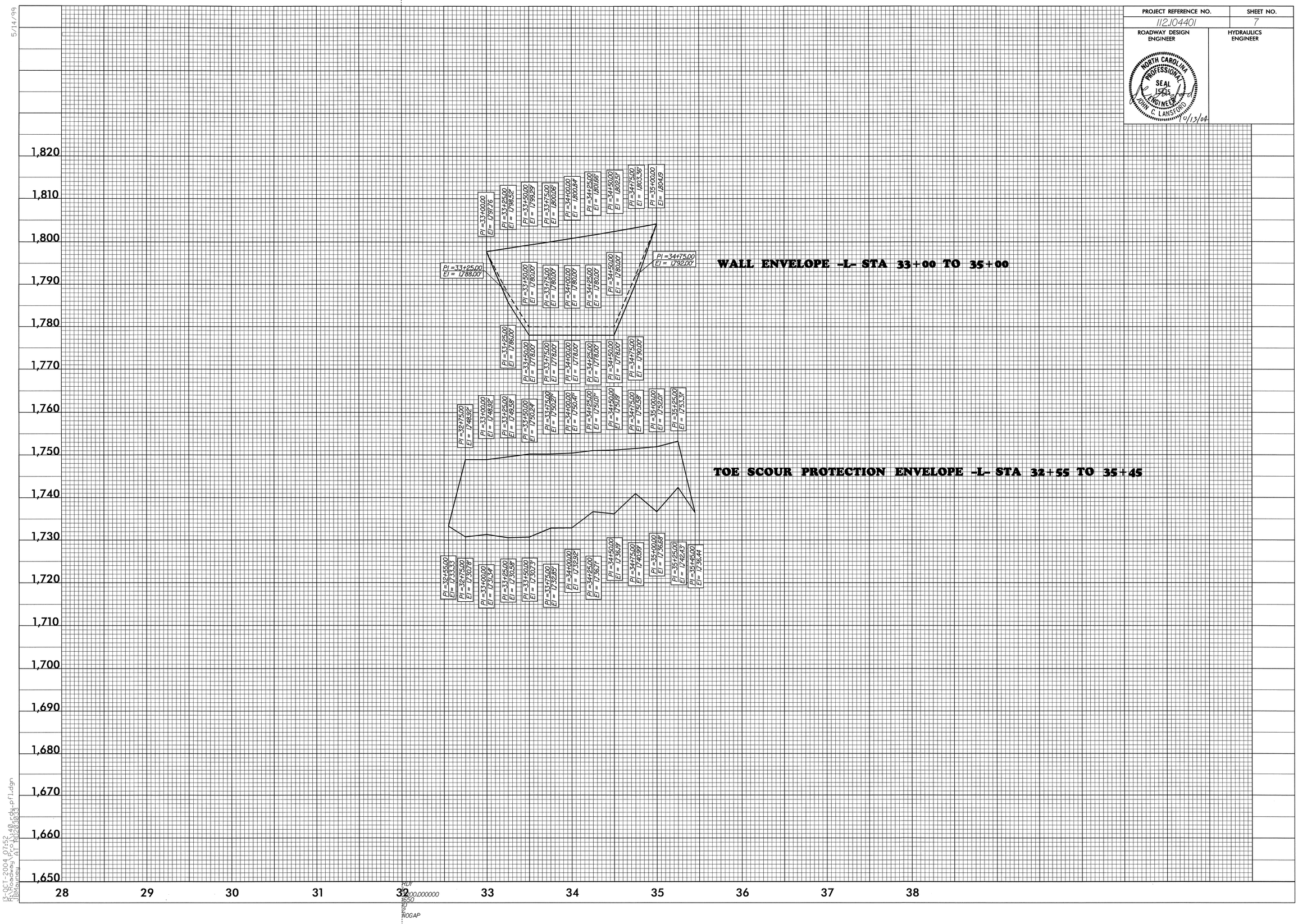

13-OCT-2004 07:52
R:\Roadway\Proj\40rdy_pfl.dgn
JBMauney A1 RD203033

5/14/99

RD203033 Wednesday October 13 2004 SH7_pfl JBMauney rd-07oce34

PROJECT REFERENCE NO.	SHEET NO.
112104401	6
ROADWAY DESIGN ENGINEER	HYDRAULICS ENGINEER

NORTH CAROLINA PROFESSIONAL SEAL 16435 ENGINEER JOHN C. LANSFORD 10/13/04

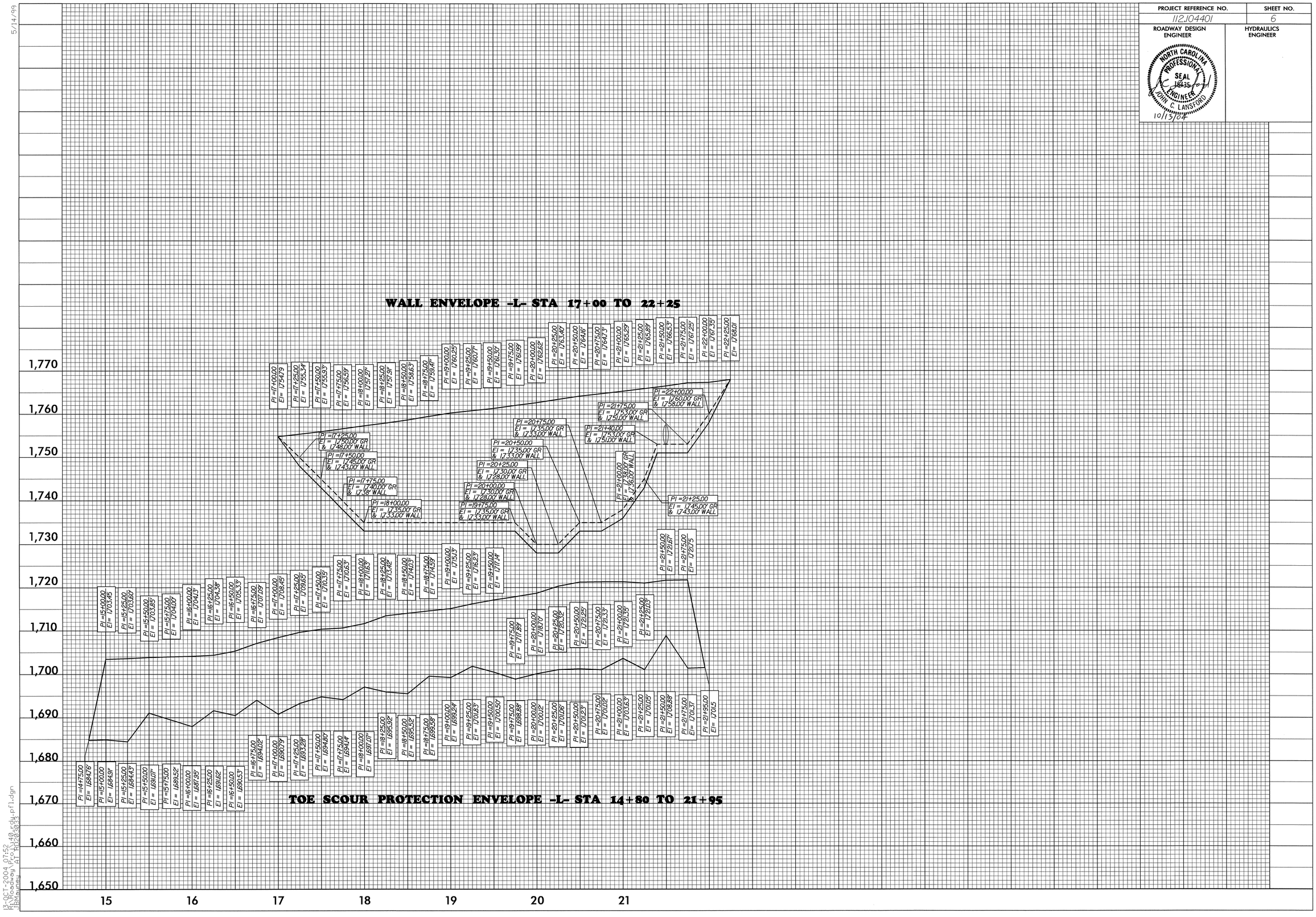

5/14/99

13-OCT-2004 07:52
R:\Roadway\Proj\40_rdy_pfl.dgn
JBMauney
AT RD203033

2-R

NOTES :

WALL DESIGN MUST BE IN ACCORDANCE WITH THE CRITERIA SET FORTH IN THE AASHTO SPECIFICATIONS FOR HIGHWAY BRIDGES AND THE FHWA MANUAL "GROUND ANCHORS AND ANCHORED SYSTEMS MANUAL", PUBLICATION No. FHWA-IF-99-015.

FOR TIEBACK RETAINING WALL, SEE "PERMANENT ANCHOR TIEBACK RETAINING WALL" SPECIAL PROVISION.

DESIGN FOR SERVICE LIFE OF 100 YEARS.

SUBMIT COMPLETE WORKING DRAWINGS AND DESIGN CALCULATIONS FOR THE TIEBACK WALL TO THE STATE BRIDGE DESIGN ENGINEER FOR REVIEW AND APPROVAL PRIOR TO EXCAVATION FOR THE WALL.

USE THE FOLLOWING SOIL PARAMETERS FOR WALL DESIGN :

ROADWAY EMBANKMENT

COHESION = 0 psf
EFFECTIVE FRICTION ANGLE = 34°
EFFECTIVE UNIT WT. = 130 pcf

EMBED PRECAST CONCRETE PANELS A MINIMUM OF 2'-0" BELOW FINISHED GRADE.

PROVIDE PRECAST CONCRETE PANELS WITH CONNECTION DETAILS.

SUBMIT COMPLETE WORKING DRAWINGS AND DESIGN CALCULATIONS FOR ALL SYSTEM COMPONENTS AND CONNECTIONS.

EXTEND TIEBACK ANCHORS THRU BOULDER FILL INTO BEDROCK.

TIEBACK RETAINING WALL MUST BE INSTALLED PRIOR TO CONSTRUCTION OF TOE SCOUR PROTECTION.

DESIGN ALL TIMBER LAGGING IN ACCORDANCE WITH SECTION 1082-1 OF THE STANDARD SPECIFICATIONS AND TABLE 16 ENTITLED RECOMMENDED THICKNESSES OF WOOD LAGGING IN APPENDIX C OF THE AASHTO "CONSTRUCTION HANDBOOK FOR BRIDGE TEMPORARY WORKS" OR PAGE 82 OF FHWA MANUAL "GROUND ANCHORS AND ANCHORED SYSTEMS MANUAL", PUBLICATION No. FHWA-IF-99-015.

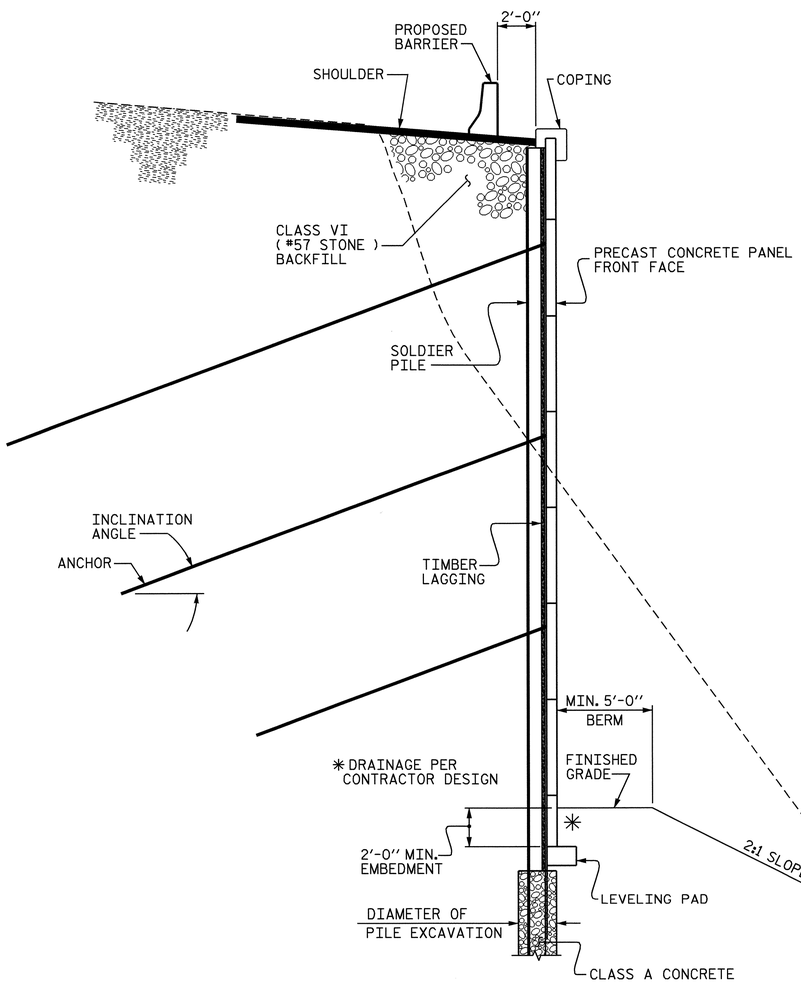

SECTION THROUGH WALL

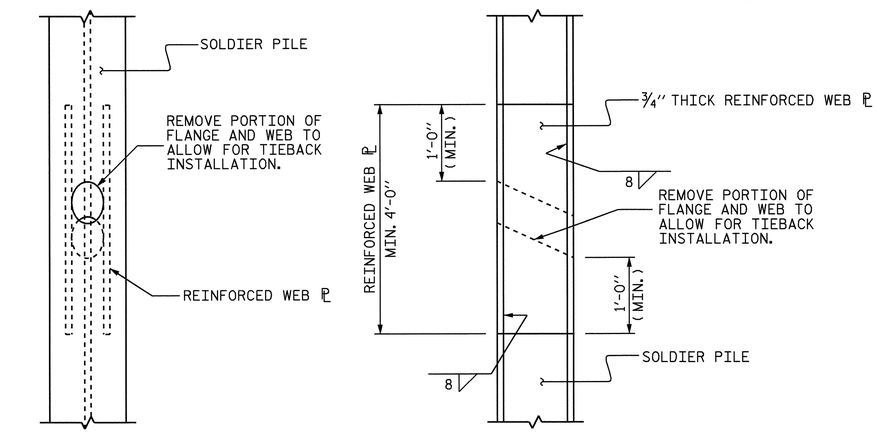

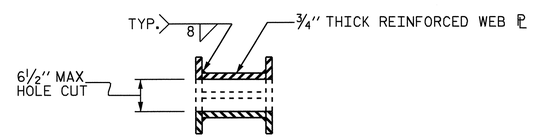

THROUGH PILE DETAILS

(FOR TIEBACK INSTALLATION)

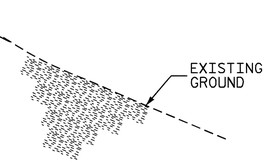

PROJECT NO. C201320
HAYWOOD COUNTY
STATION: 17+00.00 -L- TO 22+25.00 -L-
SHEET 2 OF 2

STATE OF NORTH CAROLINA
DEPARTMENT OF TRANSPORTATION
RALEIGH

PERMANENT ANCHOR TIEBACK RETAINING WALL AT SLIDE #2

REVISIONS						SHEET NO.
NO.	BY:	DATE:	NO.	BY:	DATE:	
1			3			TOTAL SHEETS
2			4			

DRAWN BY : MIKE BRITT DATE : 10-6-04
CHECKED BY : N. SURTI DATE : 10-14-04

13-OCT-2004 08:47
W:\squadv\mbritt\Slide\I-40SL01.DGN
mbritt

2-P

NOTES :

WALL DESIGN MUST BE IN ACCORDANCE WITH THE CRITERIA SET FORTH IN THE AASHTO SPECIFICATIONS FOR HIGHWAY BRIDGES AND THE FHWA MANUAL "GROUND ANCHORS AND ANCHORED SYSTEMS MANUAL", PUBLICATION No. FHWA-IF-99-015.

FOR TIEBACK RETAINING WALL, SEE "PERMANENT ANCHOR TIEBACK RETAINING WALL" SPECIAL PROVISION.

DESIGN FOR SERVICE LIFE OF 100 YEARS.

SUBMIT COMPLETE WORKING DRAWINGS AND DESIGN CALCULATIONS FOR THE TIEBACK WALL TO THE STATE BRIDGE DESIGN ENGINEER FOR REVIEW AND APPROVAL PRIOR TO EXCAVATION FOR THE WALL.

USE THE FOLLOWING SOIL PARAMETERS FOR WALL DESIGN :

ROADWAY EMBANKMENT

COHESION = 0 psf
EFFECTIVE FRICTION ANGLE = 34°
EFFECTIVE UNIT WT. = 130 pcf

EMBED PRECAST CONCRETE PANELS A MINIMUM OF 2'-0" BELOW FINISHED GRADE.

PROVIDE PRECAST CONCRETE PANELS WITH CONNECTION DETAILS.

SUBMIT COMPLETE WORKING DRAWINGS AND DESIGN CALCULATIONS FOR ALL SYSTEM COMPONENTS AND CONNECTIONS.

EXTEND TIEBACK ANCHORS THRU BOULDER FILL INTO BEDROCK.

TIEBACK RETAINING WALL MUST BE INSTALLED PRIOR TO CONSTRUCTION OF TOE SCOUR PROTECTION.

DESIGN ALL TIMBER LAGGING IN ACCORDANCE WITH SECTION 1082-1 OF THE STANDARD SPECIFICATIONS AND TABLE 16 ENTITLED RECOMMENDED THICKNESSES OF WOOD LAGGING IN APPENDIX C OF THE AASHTO "CONSTRUCTION HANDBOOK FOR BRIDGE TEMPORARY WORKS" OR PAGE 82 OF FHWA MANUAL "GROUND ANCHORS AND ANCHORED SYSTEMS MANUAL", PUBLICATION No. FHWA-IF-99-015.

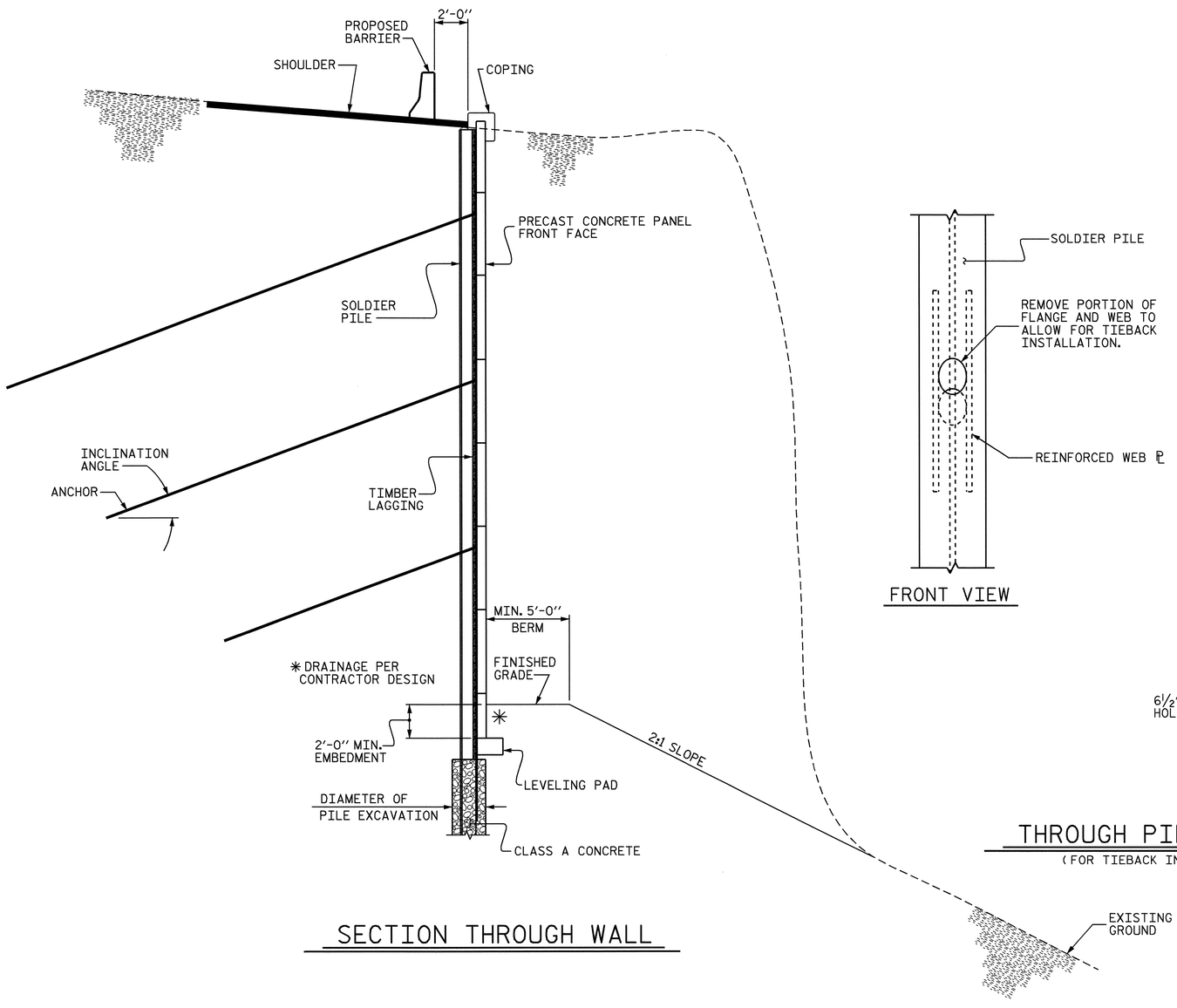

SECTION THROUGH WALL

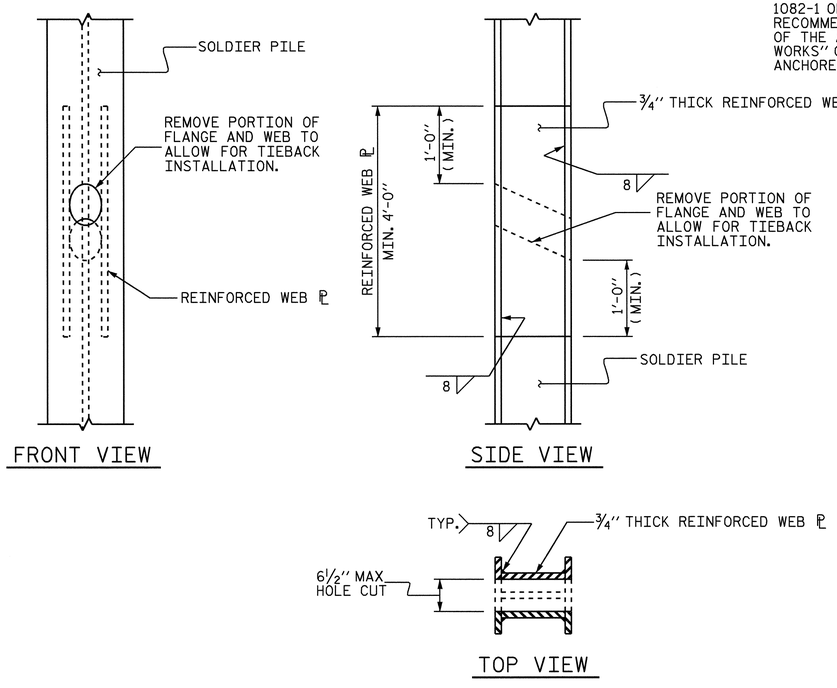

THROUGH PILE DETAILS

(FOR TIEBACK INSTALLATION)

PROJECT NO. C201320

HAYWOOD COUNTY

STATION: 33+00.00 -L- TO 35+00.00 -L-

SHEET 2 OF 2

STATE OF NORTH CAROLINA
DEPARTMENT OF TRANSPORTATION
RALEIGH

PERMANENT ANCHOR TIEBACK RETAINING WALL AT SLIDE #1

REVISIONS						SHEET NO.
NO.	BY:	DATE:	NO.	BY:	DATE:	
1			3			TOTAL SHEETS
2			4			

DRAWN BY : MIKE BRITT DATE : 10-6-04
CHECKED BY : N. SURTI DATE : 10-14-04

13-OCT-2004 08:47
W:\squadv\mbritt\Slide\I-40SL01.DGN
mbritt

2-Q

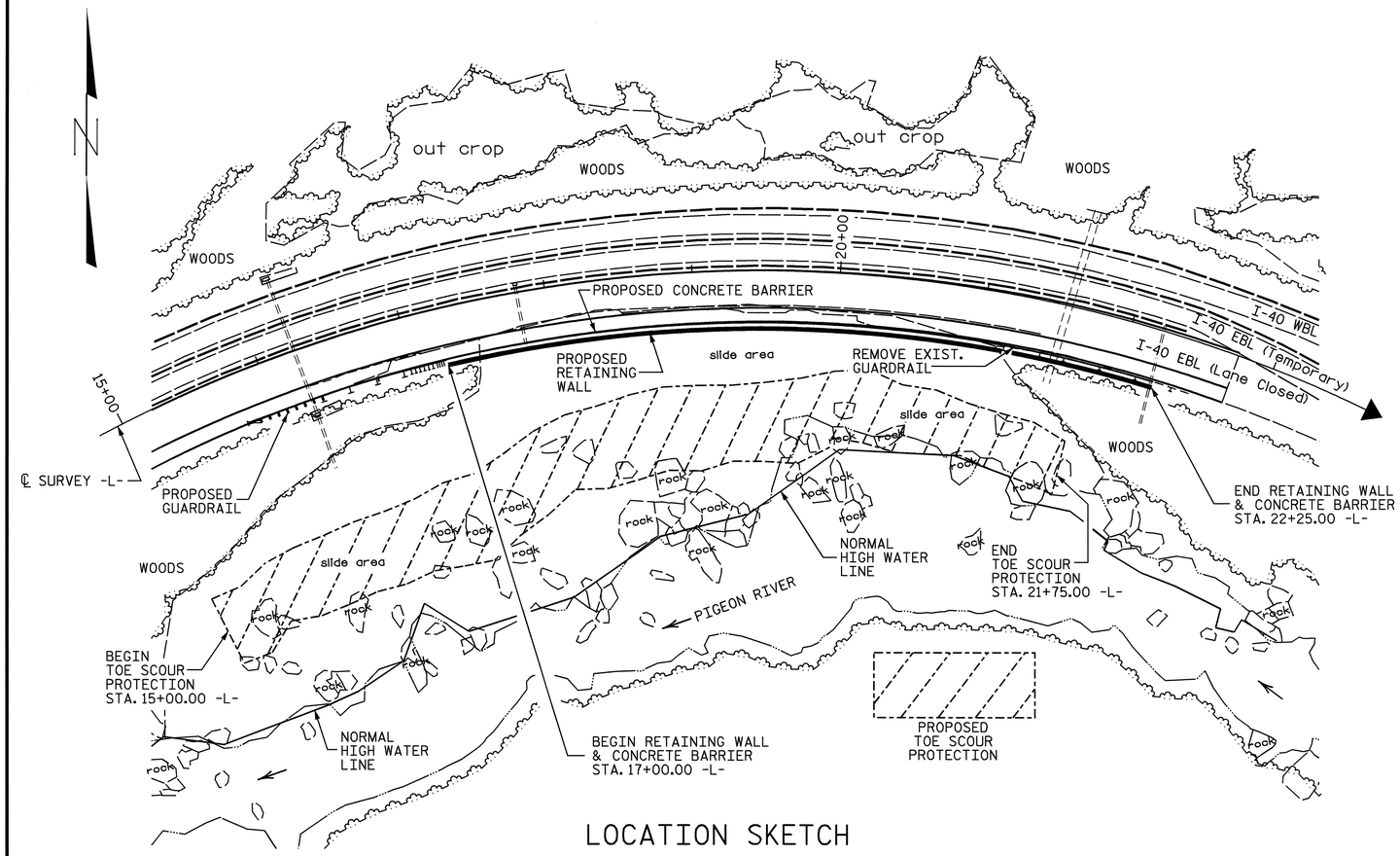

LOCATION SKETCH

RETAINING WALL AT SLIDE #2 ELEVATIONS -L- STATION 17+00.00 TO 22+25.00

-L- STATION	OFFSET FROM ℄	ELEVATION @ TOP OF WALL	ELEVATION @ BOTTOM OF WALL	ELEVATION @ FINISHED GRADE	WALL HEIGHT
17+00.00	39.00′	1754.79′	1754.79′	1754.79′	0
17+25.00	39.00′	1755.34′	1748.00′	1750.00′	7.34′
17+50.00	39.00′	1755.93′	1743.00′	1745.00′	12.93′
17+75.00	39.00′	1756.59′	1738.00′	1740.00′	18.59′
18+00.00	39.00′	1757.27′	1733.00′	1735.00′	19.27′
18+25.00	39.00′	1757.91′	1733.00′	1735.00′	24.91′
18+50.00	39.00′	1758.63′	1733.00′	1735.00′	25.63′
18+75.00	39.00′	1759.47′	1733.00′	1735.00′	26.47′
19+00.00	39.00′	1760.25′	1733.00′	1735.00′	27.25′
19+25.00	39.00′	1760.77′	1733.00′	1735.00′	27.77′
19+50.00	39.00′	1761.30′	1733.00′	1735.00′	28.30′
19+75.00	39.00′	1761.99′	1733.00′	1735.00′	28.99′
20+00.00	39.00′	1762.62′	1728.00′	1730.00′	34.62′
20+25.00	39.00′	1763.40′	1728.00′	1730.00′	35.40′
20+50.00	39.00′	1764.16′	1733.00′	1735.00′	31.16′
20+75.00	39.00′	1764.73′	1733.00′	1735.00′	31.73′
21+00.00	39.00′	1765.29′	1736.00′	1738.00′	29.29′
21+25.00	39.00′	1765.89′	1743.00′	1745.00′	22.89′
21+50.00	39.00′	1766.53′	1751.00′	1753.00′	15.53′
21+75.00	39.00′	1767.25′	1751.00′	1753.00′	16.25′
22+00.00	39.00′	1767.35′	1758.00′	1760.00′	9.35′
22+25.00	39.00′	1768.01′	1768.01′	1768.01′	0

ESTIMATED QUANTITIES

PERMANENT ANCHOR TIEBACK WALL AT SLIDE #2 -L- STA. 17+00.00 TO 22+25.00	11,000 SQ. FT.
GROUT FOR TIEBACK ANCHORS AT WALL AT SLIDE #2 -L- STA. 17+00.00 TO 22+25.00	250 CU. YD.
CLASS VI SELECT MATERIAL FOR WALL AT SLIDE #2 -L- STA. 17+00.00 TO 22+25.00	2,000 TONS

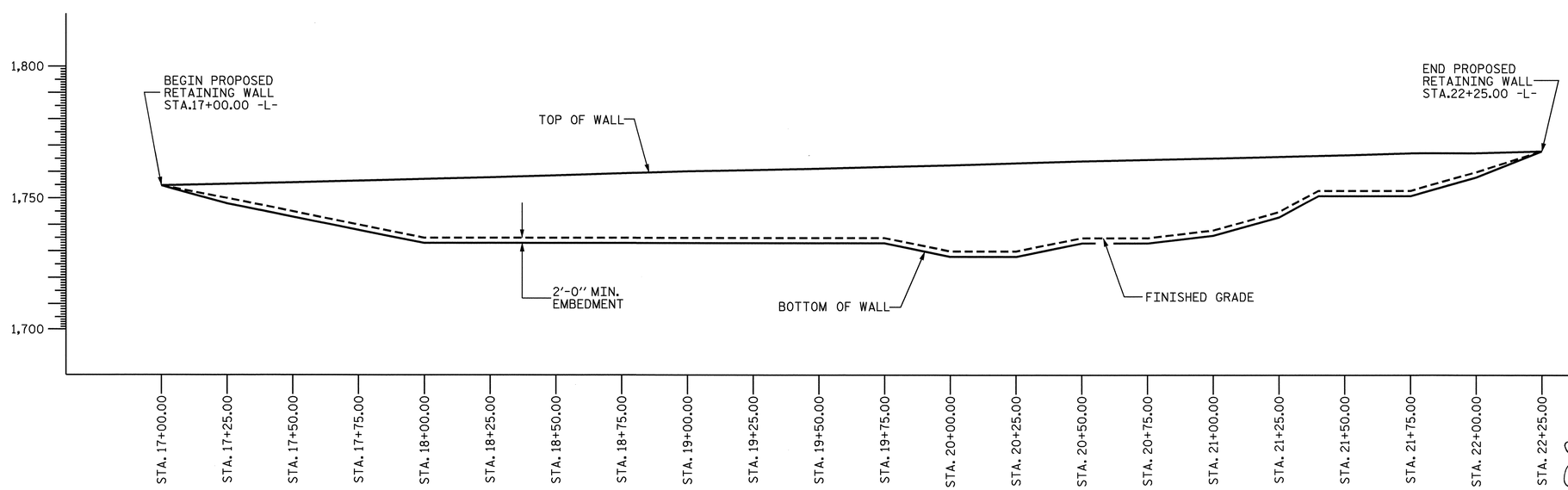

PROJECT NO. C201320
HAYWOOD COUNTY
STATION: 17+00.00 -L- TO 22+25.00 -L-
SHEET 1 OF 2

STATE OF NORTH CAROLINA
DEPARTMENT OF TRANSPORTATION
RALEIGH

PERMANENT ANCHOR TIEBACK RETAINING WALL AT SLIDE #2

REVISIONS						SHEET NO.
NO.	BY:	DATE:	NO.	BY:	DATE:	
1			3			TOTAL SHEETS
2			4			

DRAWN BY : MIKE BRITT DATE : 10-8-04
CHECKED BY : N. SURTI DATE : 10-14-04

13-OCT-2004 08:47
W:\squadv\mbritt\Slide\I-40SL01.DGN
mbritt

2-0

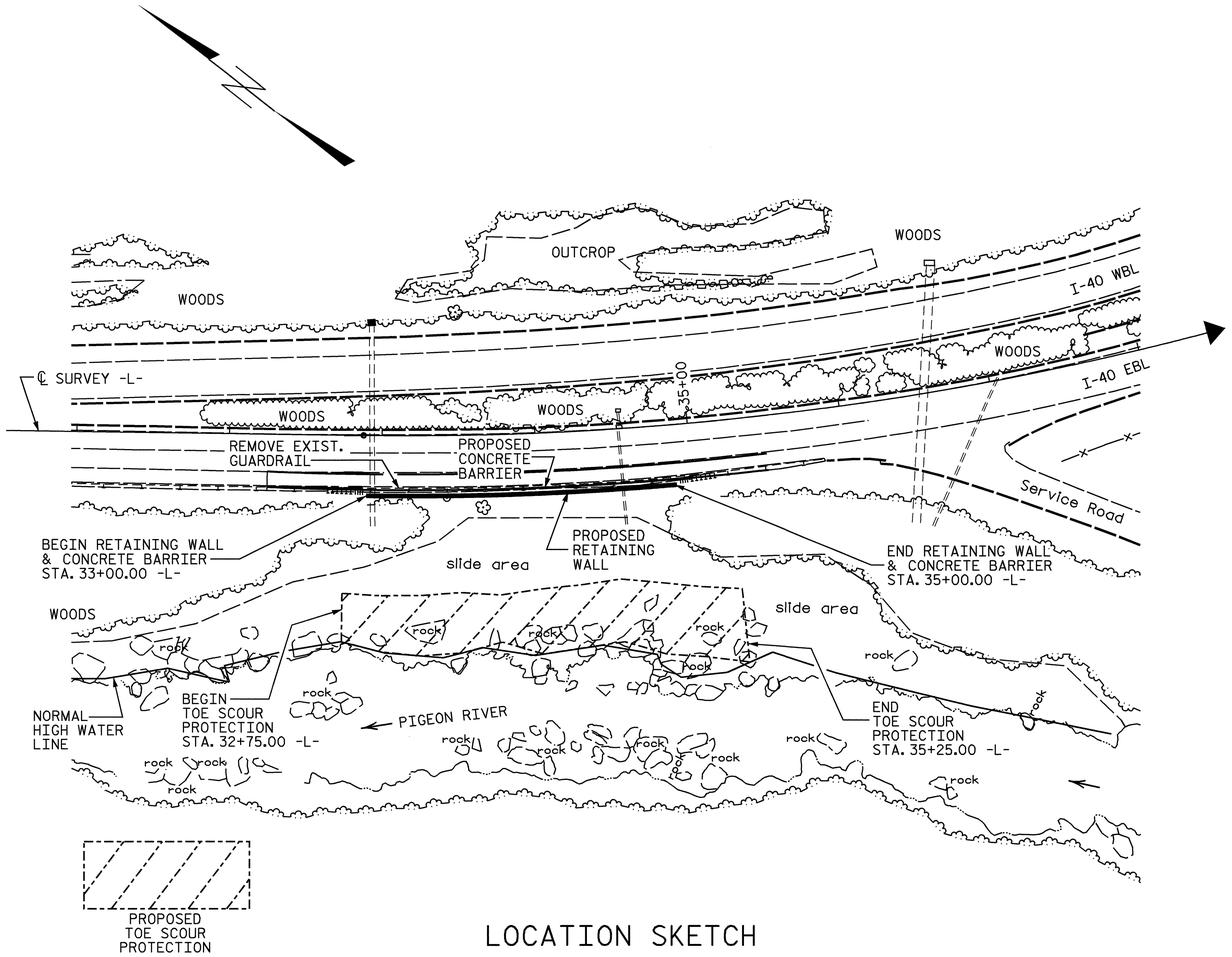

LOCATION SKETCH

RETAINING WALL AT SLIDE #1 ELEVATIONS -L- STATION 33+00.00 TO 35+00.00					
-L- STATION	OFFSET FROM ℄	ELEVATION @ TOP OF WALL	ELEVATION @ BOTTOM OF WALL	ELEVATION @ FINISHED GRADE	WALL HEIGHT
33+00.00	39.00′	1797.76′	1797.76′	1797.76′	0
33+25.00	39.00′	1798.52′	1786.00′	1788.00′	12.52′
33+50.00	39.00′	1799.29′	1778.00′	1780.00′	21.29′
33+75.00	39.00′	1800.06′	1778.00′	1780.00′	22.06′
34+00.00	39.00′	1800.84′	1778.00′	1780.00′	22.84′
34+25.00	39.00′	1801.66′	1778.00′	1780.00′	23.66′
34+50.00	39.00′	1802.51′	1778.00′	1780.00′	24.51′
34+75.00	39.00′	1803.36′	1790.00′	1792.00′	13.36′
35+00.00	39.00′	1804.19′	1804.19′	1804.19′	0

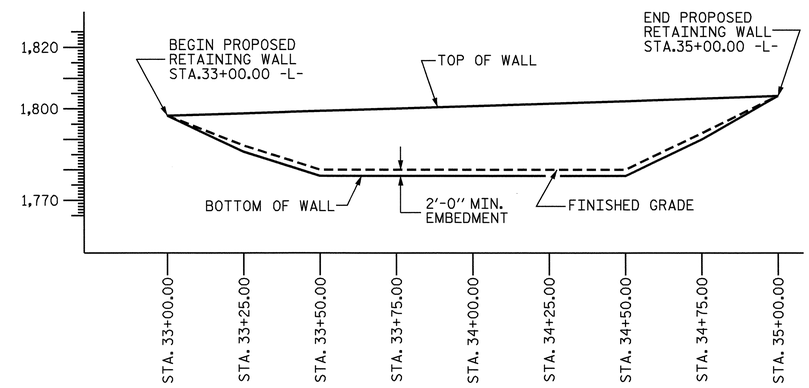

ESTIMATED QUANTITIES	
PERMANENT ANCHOR TIEBACK WALL AT SLIDE #1 -L- STA. 33+00.00 TO 35+00.00	3,200 SQ. FT.
GROUT FOR TIEBACK ANCHORS AT WALL AT SLIDE #1 -L- STA. 33+00.00 TO 35+00.00	100. CU. YD.

NORTH CAROLINA PROFESSIONAL SEAL 10-13-04 ENGINEER JOHN S. W. FARGHER

PROJECT NO. C201320

HAYWOOD COUNTY

STATION: 33+00.00 -L- TO 35+00.00 -L-

SHEET 1 OF 2

STATE OF NORTH CAROLINA
DEPARTMENT OF TRANSPORTATION
RALEIGH

PERMANENT ANCHOR TIEBACK RETAINING WALL AT SLIDE #1

REVISIONS						SHEET NO.
NO.	BY:	DATE:	NO.	BY:	DATE:	
1			3			TOTAL SHEETS
2			4			

DRAWN BY : MIKE BRITT DATE : 10-8-04
CHECKED BY : N. SURTI DATE : 10-14-04

13-OCT-2004 08:47
W:\squadv\mbritt\Slide\I-40SL01.DGN
mbritt

PROJ. REFERENCE NO.	SHEET NO.
112.104401	2-N

STATE OF
NORTH CAROLINA
DEPT. OF TRANSPORTATION
DIVISION OF HIGHWAYS
RALEIGH, N.C.

ENGLISH STANDARD DRAWING FOR

DRUMS

SHEET 1 OF 1

1130D01

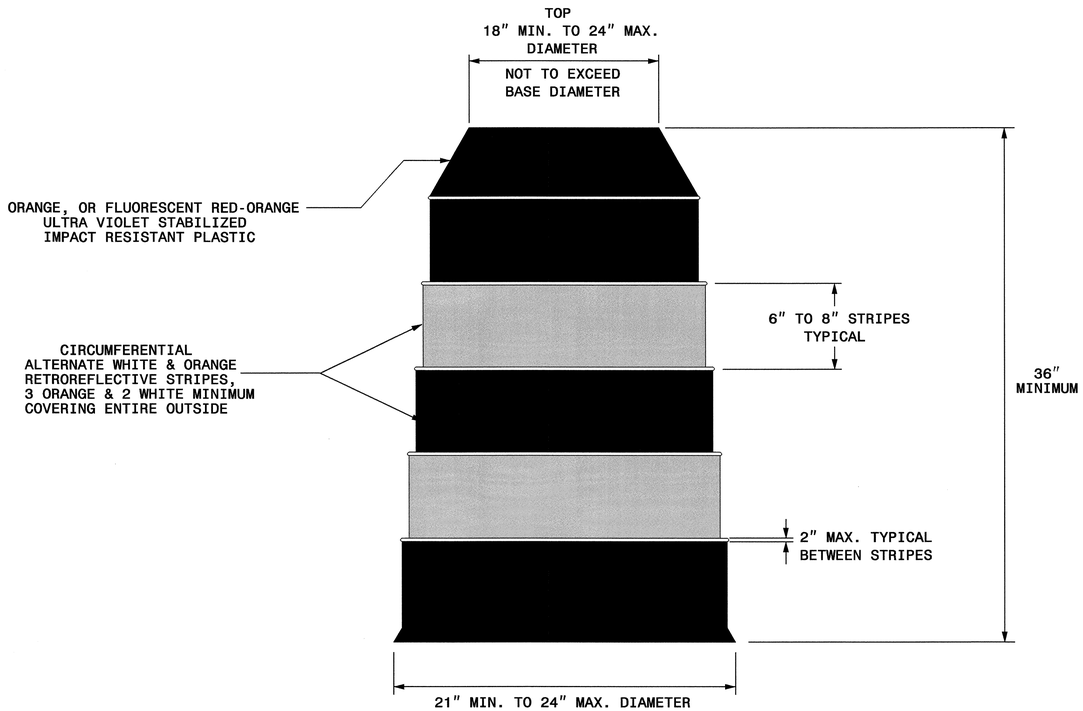

GENERAL NOTES

-BALLASTING SHALL BE ACHIEVED BY THE SAND BAG, TIRE-SIDEWALL BALLAST, OR PREFORMED WEIGHTED BASE BALLASTING METHODS. DO NOT PLACE BALLAST ON TOP OF THE DRUM, NOR AS TO PRESENT A HAZARD WHEN STRUCK.

-IF NECESSARY PLACE THE NAME OF THE AGENCY, CONTRACTOR, OR SUPPLIER ON NON-RETROREFLECTIVE DRUM SURFACES. SHOW THE LETTERS AND NUMBERS USING A NON-RETROREFLECTIVE COLOR AND NOT OVER 2" IN HEIGHT.

STATE OF
NORTH CAROLINA
DEPT. OF TRANSPORTATION
DIVISION OF HIGHWAYS
RALEIGH, N.C.

ENGLISH STANDARD DRAWING FOR

DRUMS

SHEET 1 OF 1

1130D01

APPROVED: _____ DATE: _____

SEAL

REPLACEMENT DETAIL FOR
RSD 1130.01

SCALE:	NONE
DATE:	8/02
DWG. BY:	MMM
DESIGN BY:	MMM
REVIEWED BY:	MMM

REVISIONS

CADD FILE

12-OCT-2004 10:57
D:\PROJECT.INFO\Drums_english.dgn
w:\ccas
AT TETC193479

12-APR-2004 08:22
W:\Special Details\ericward\stds\02' Stds to Special Details\english\85701\857d01.dgn
.ericward AT DS212260

5/14/99

STATE OF
NORTH CAROLINA
DEPT. OF TRANSPORTATION
DIVISION OF HIGHWAYS
RALEIGH, N.C.

ENGLISH DETAIL DRAWING FOR
PRECAST REINFORCED CONCRETE BARRIER
41" SINGLE FACED

SHEET 1 OF 8
857D01

NOTE:
1) THIS DRAWING IS NOT INTENDED TO SHOW TYPICAL BARRIER AND GUARDRAIL INSTALLATION. IT DETAILS POSSIBLE BARRIER AND STRUCTURE ANCHOR COMBINATIONS FOR THIS TYPE FACILITY.

2) USE TRAILING END GUARDRAIL IF WARRANTED

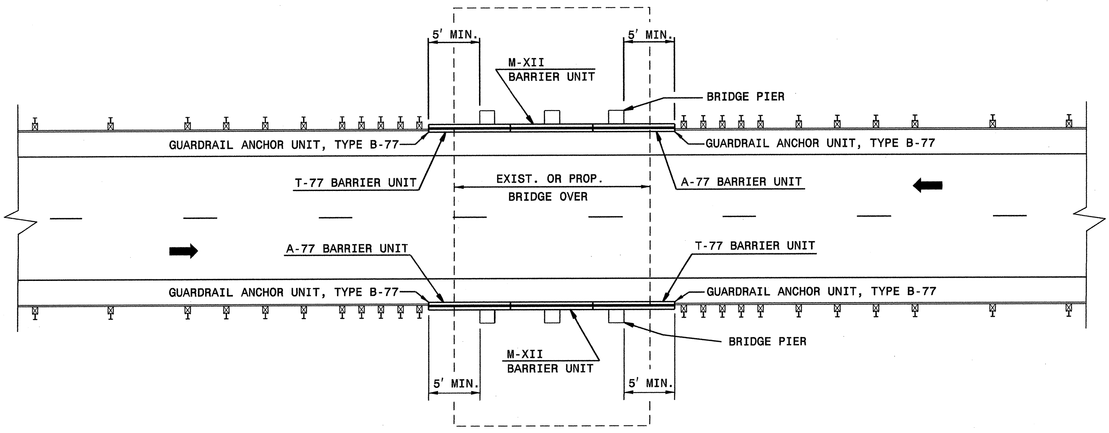

GUARDRAIL AND BARRIER AT UNDIVIDED HIGHWAY BRIDGE UNDERPASS

STATE OF
NORTH CAROLINA
DEPT. OF TRANSPORTATION
DIVISION OF HIGHWAYS
RALEIGH, N.C.

ENGLISH DETAIL DRAWING FOR
PRECAST REINFORCED CONCRETE BARRIER
41" SINGLE FACED

SHEET 1 OF 8
857D01

STATE OF
NORTH CAROLINA
DEPT. OF TRANSPORTATION
DIVISION OF HIGHWAYS
RALEIGH, N.C.

ENGLISH DETAIL DRAWING FOR
PRECAST REINFORCED CONCRETE BARRIER
41" SINGLE FACED

SHEET 2 OF 8
857D01

NOTE:
1) THIS DRAWING IS NOT INTENDED TO SHOW TYPICAL BARRIER AND GUARDRAIL INSTALLATION. IT DETAILS POSSIBLE BARRIER AND STRUCTURE ANCHOR COMBINATIONS FOR THIS TYPE FACILITY.
2) USE TRAILING END GUARDRAIL IF WARRANTED

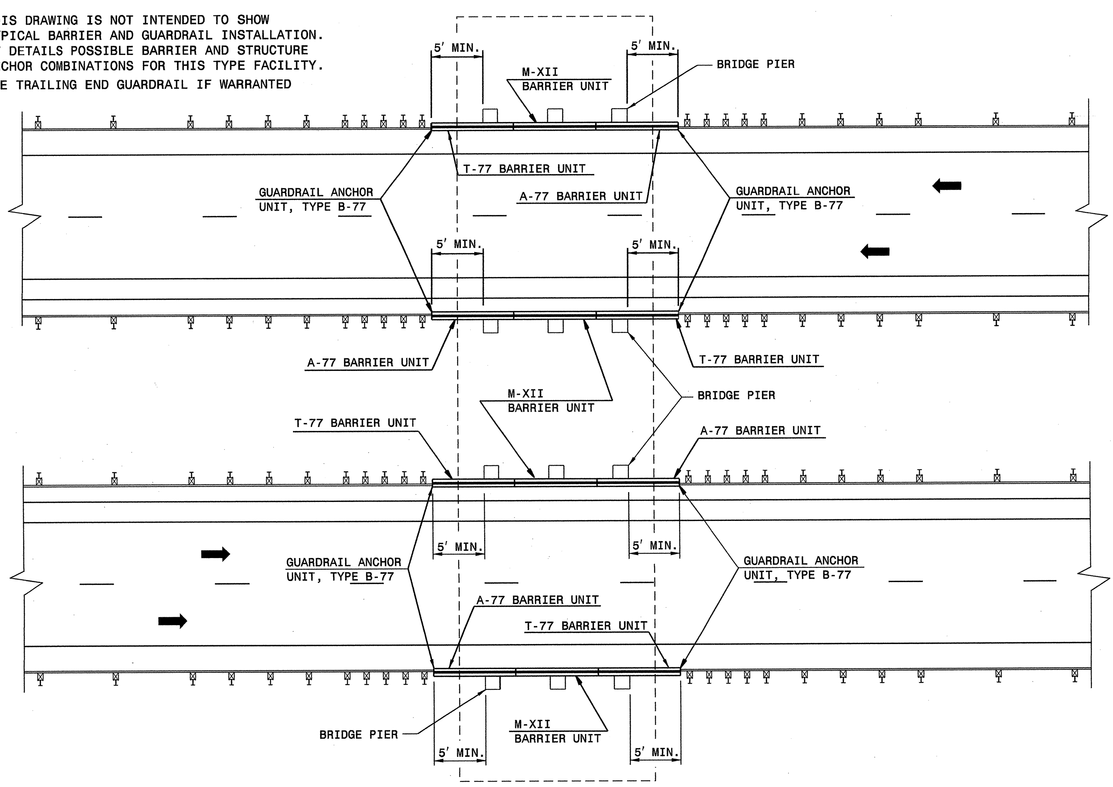

GUARDRAIL AND BARRIER AT DIVIDED HIGHWAY BRIDGE UNDERPASS

STATE OF
NORTH CAROLINA
DEPT. OF TRANSPORTATION
DIVISION OF HIGHWAYS
RALEIGH, N.C.

ENGLISH DETAIL DRAWING FOR
PRECAST REINFORCED CONCRETE BARRIER
41" SINGLE FACED

SHEET 2 OF 8
857D01

ORIGINAL BY: 2002 STD. 857.01 DATE:
MODIFIED BY: E.E. WARD DATE: 6-12-03
CHECKED BY: C.W. Lynn DATE: 4/12/04
FILE SPEC.: /usr/stds/02stdetail/english/85701/857d01.dgn

SEE PLATE FOR TITLE

DESIGN SERVICES UNIT
STANDARDS AND SPECIAL DESIGN
Office 919-250-4128 FAX 919-250-4119

NORTH CAROLINA PROFESSIONAL SEAL 022586 ENGINEER JOCELYN S. HOWARD
10/13/04

PROJECT REFERENCE NO. 112.104401
SHEET NO. 2-C

PROJECT REFERENCE NO.	SHEET NO.
112.104401	2-D

STATE OF NORTH CAROLINA DEPT. OF TRANSPORTATION DIVISION OF HIGHWAYS RALEIGH, N.C.

ENGLISH DETAIL DRAWING FOR
PRECAST REINFORCED CONCRETE BARRIER
41" SINGLE FACED

SHEET 3 OF 8 **857D01**

STATE OF NORTH CAROLINA DEPT. OF TRANSPORTATION DIVISION OF HIGHWAYS RALEIGH, N.C.

ENGLISH DETAIL DRAWING FOR
PRECAST REINFORCED CONCRETE BARRIER
41" SINGLE FACED

SHEET 4 OF 8 **857D01**

STATE OF NORTH CAROLINA DEPT. OF TRANSPORTATION DIVISION OF HIGHWAYS RALEIGH, N.C.

ENGLISH DETAIL DRAWING FOR
PRECAST REINFORCED CONCRETE BARRIER
41" SINGLE FACED

SHEET 3 OF 8 **857D01**

STATE OF NORTH CAROLINA DEPT. OF TRANSPORTATION DIVISION OF HIGHWAYS RALEIGH, N.C.

ENGLISH DETAIL DRAWING FOR
PRECAST REINFORCED CONCRETE BARRIER
41" SINGLE FACED

SHEET 4 OF 8 **857D01**

NORTH CAROLINA PROFESSIONAL SEAL 022966 ENGINEER JOEL E. HOUPTON
10/12/04

DESIGN SERVICES UNIT
STANDARDS AND SPECIAL DESIGN
Office 919-250-4128 FAX 919-250-4119

SEE PLATE FOR TITLE

ORIGINAL BY: 2002 STD.857.01 DATE:
MODIFIED BY: E.E. WARD DATE: 6-12-03
CHECKED BY: DATE: 9-12-04
FILE SPEC.: /usr/stds/02todetail/english/85701/857d01.dgn

12-APR-2004 08:02
W:\Special Details\ericward\stds\02" Stds to Special Details\english\85701\857d01.dgn
ericward

STATE OF NORTH CAROLINA
DEPT. OF TRANSPORTATION
DIVISION OF HIGHWAYS
RALEIGH, N.C.

ENGLISH DETAIL DRAWING FOR
PRECAST REINFORCED CONCRETE BARRIER
41" SINGLE FACED

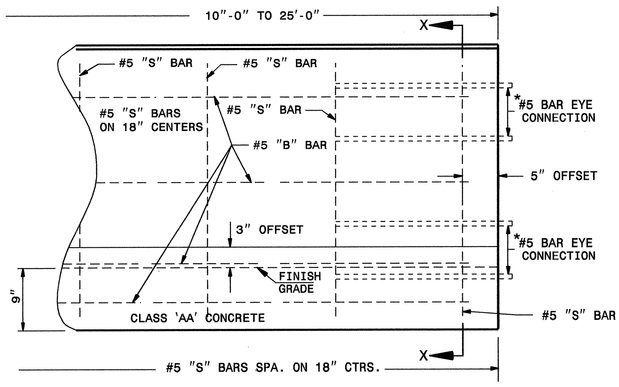

PART FRONT ELEVATION

*SEE SHEET 4 FOR DIMENSIONS

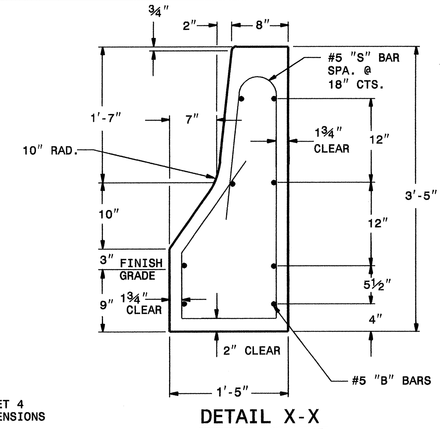

DETAIL X-X
CROSS SECTIONAL VIEW

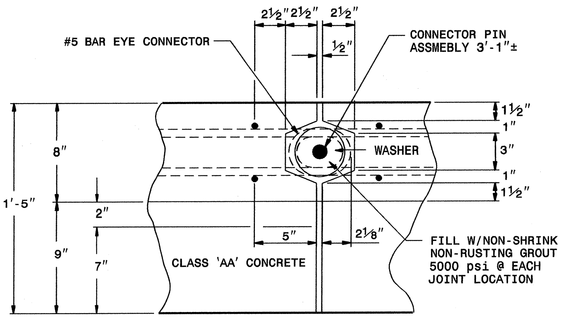

PLAN OF BONDED CONNECTION OF PRECAST UNIT

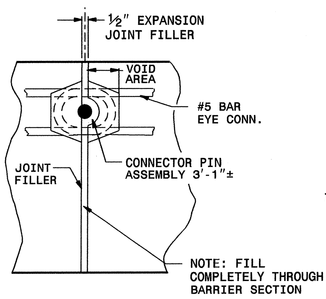

JOINT FILLER DETAIL

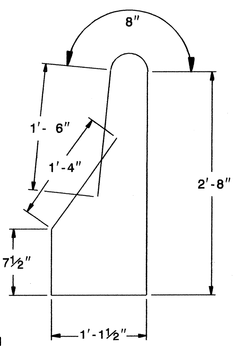

S - BARS
#5 BAR

SHEET 5 OF 8
857D01

STATE OF NORTH CAROLINA
DEPT. OF TRANSPORTATION
DIVISION OF HIGHWAYS
RALEIGH, N.C.

ENGLISH DETAIL DRAWING FOR
PRECAST REINFORCED CONCRETE BARRIER
41" SINGLE FACED

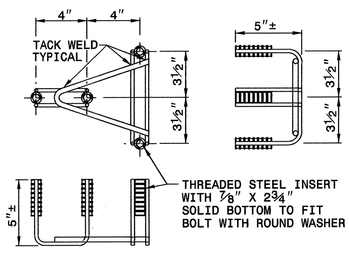

DETAIL A
4 BOLT INSERT ASSEMBLY

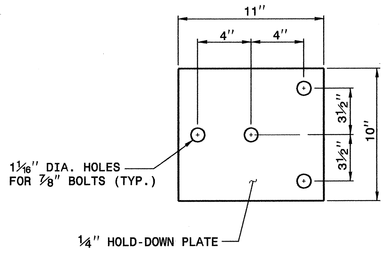

DETAIL B
4 BOLT HOLD DOWN PLATE

NOTES FOR 4 BOLT HOLD DOWN PLATE

THE GUARDRAIL ANCHOR ASSEMBLY SHALL CONSIST OF A ¼" HOLD DOWN PLATE AND 4 - ⅞" DIA. BOLTS WITH NUTS AND WASHERS.

THE HOLD-DOWN PLATE SHALL CONFORM TO AASHTO M270 GRADE 36. AFTER FABRICATION, THE HOLD-DOWN PLATE SHALL BE HOT-DIP GALVANIZED IN ACCORDANCE WITH AASHTO M111.

AFTER INSTALLATION, THE EXPOSED THREAD OF THE BOLT SHALL BE BURRED WITH A SHARP POINTED TOOL.

THE 1¼" DIA. HOLES SHALL BE FORMED OR DRILLED WITH A CORE BIT. IMPACT TOOLS WILL NOT BE PERMITTED. ANY CONCRETE DAMAGED BY THIS WORK SHALL BE REPAIRED TO THE SATISFACTION OF THE ENGINEER.

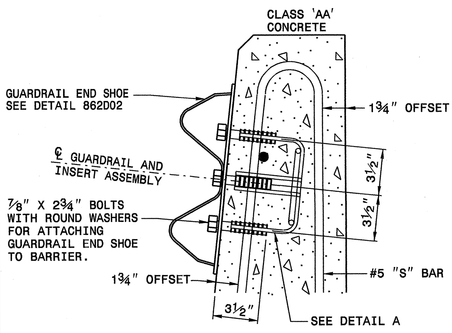

PART SECTION
OF BARRIER
THRU END SHOE SECTION AND
4 BOLT INSERT ASSEMBLY

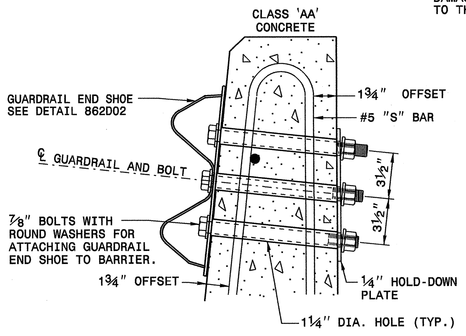

PART SECTION
OF BARRIER
THRU END SHOE SECTION AND
4 BOLT HOLD DOWN PLATE

SHEET 6 OF 8
857D01

STATE OF NORTH CAROLINA
DEPT. OF TRANSPORTATION
DIVISION OF HIGHWAYS
RALEIGH, N.C.

ENGLISH DETAIL DRAWING FOR
PRECAST REINFORCED CONCRETE BARRIER
41" SINGLE FACED

SEE PLATE FOR TITLE

ORIGINAL BY: 2002 STD.-857.01 DATE:
MODIFIED BY: E.E. WARD DATE: 4-07-04
CHECKED BY: C.H.J. Wise DATE: 4-12-04
FILE SPEC.: /usr/stds/02etdetail/english/857D1/857d01.dgn

DESIGN SERVICES UNIT
STANDARDS AND SPECIAL DESIGN
Office 919-250-4128 FAX 919-250-4119

NORTH CAROLINA PROFESSIONAL SEAL ENGINEER 02966 CHRISTOPHER J. WISE
10/1/04

PROJECT REFERENCE NO. 112-104401
SHEET NO. 3-E

STATE OF NORTH CAROLINA
DEPT. OF TRANSPORTATION
DIVISION OF HIGHWAYS
RALEIGH, N.C.

ENGLISH DETAIL DRAWING FOR
PRECAST REINFORCED CONCRETE BARRIER
41" SINGLE FACED

SHEET 7 OF 8
857D01

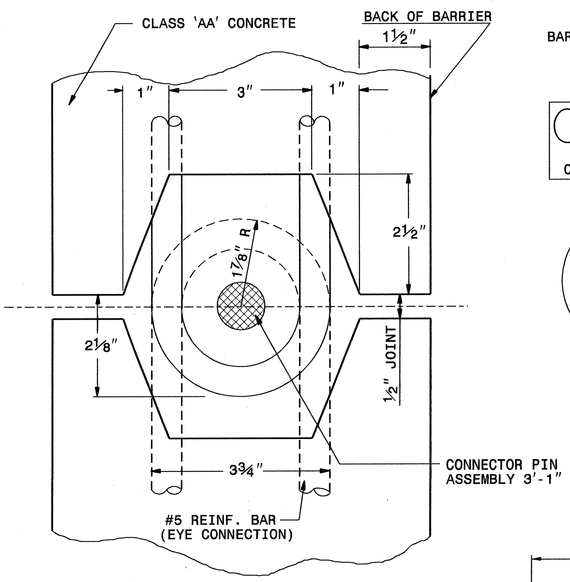

GROOVE END AND
PIN & EYE CONNECTION DETAILS

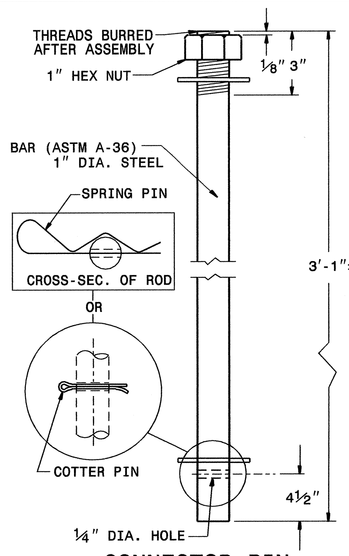

CONNECTOR PIN
ASSEMBLY

GALVANIZE ALL PARTS IN ACCORDANCE
WITH ASTM A-153 SPEC.

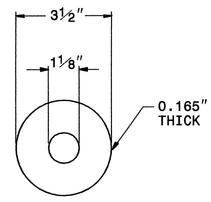

PLAIN GALVANIZED
STEEL WASHER
FOR 1" PIN

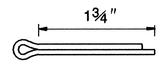

3/16"SAE STD.
COTTER PIN

SPRING PIN

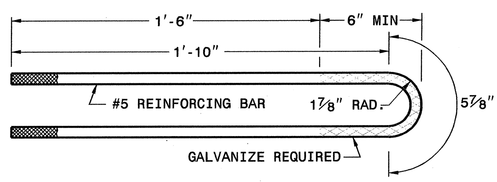

DETAIL OF REINFORCING EYE BAR

STATE OF NORTH CAROLINA
DEPT. OF TRANSPORTATION
DIVISION OF HIGHWAYS
RALEIGH, N.C.

ENGLISH DETAIL DRAWING FOR
PRECAST REINFORCED CONCRETE BARRIER
41" SINGLE FACED

SHEET 7 OF 8
857D01

STATE OF NORTH CAROLINA
DEPT. OF TRANSPORTATION
DIVISION OF HIGHWAYS
RALEIGH, N.C.

ENGLISH DETAIL DRAWING FOR
PRECAST REINFORCED CONCRETE BARRIER
41" SINGLE FACED

SHEET 8 OF 8
857D01

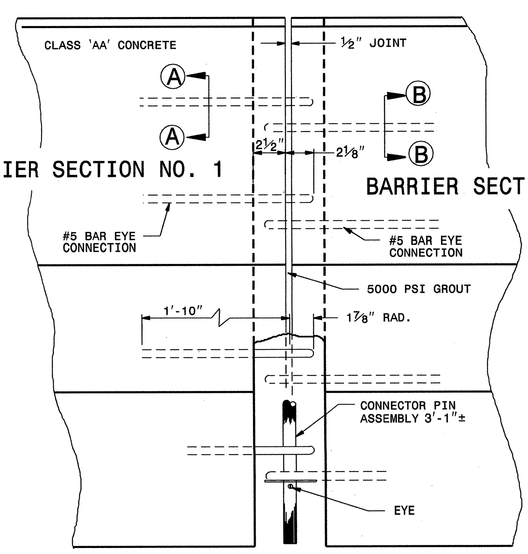

NOTE: SEE SHEET 9 FOR DETAILS OF
CONNECTOR PIN ASSEMBLIES.

JOINT VIEW ELEVATION

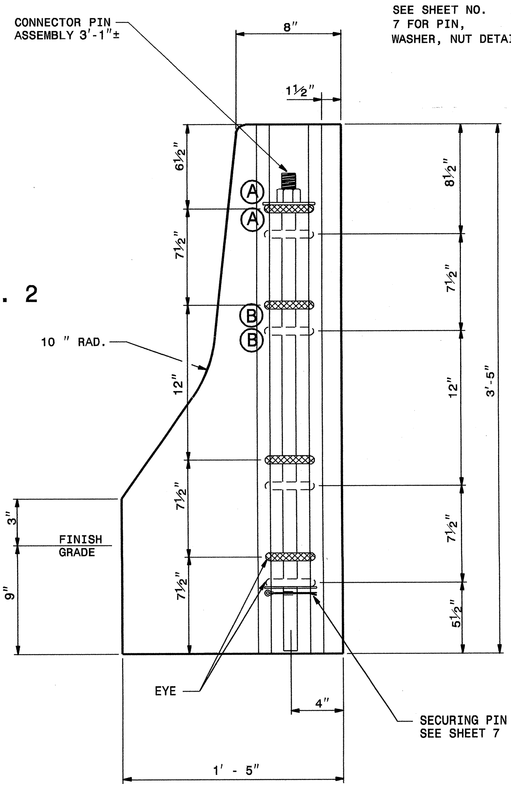

END VIEW

STATE OF NORTH CAROLINA
DEPT. OF TRANSPORTATION
DIVISION OF HIGHWAYS
RALEIGH, N.C.

ENGLISH DETAIL DRAWING FOR
PRECAST REINFORCED CONCRETE BARRIER
41" SINGLE FACED

SHEET 8 OF 8
857D01

DESIGN SERVICES UNIT
STANDARDS AND SPECIAL DESIGN
Office 919-250-4128 FAX 919-250-4119

SEE PLATE FOR TITLE

ORIGINAL BY: 2002 STD. 857.01 DATE: 6-12-03
MODIFIED BY: E.E. WARD
CHECKED BY: [illegible] DATE: 4-14-04
FILE SPEC.: /usr/stds/octopdat/ldat15/857d01/857d01.dgn

NORTH CAROLINA PROFESSIONAL SEAL 022986 ENGINEER JOHN S. HOWERTON
10/31/04

PROJECT REFERENCE NO. 112.10440
SHEET NO. 2-F

PROJECT REFERENCE NO.	SHEET NO.
112.104401	2-G

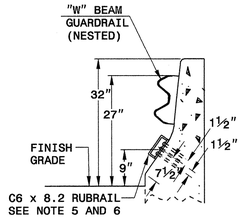

SECTION A-A

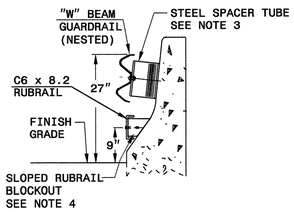

SECTION B-B

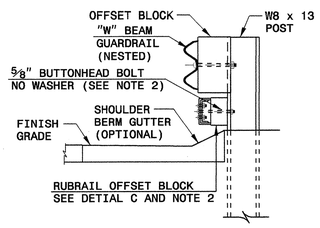

SECTION C-C

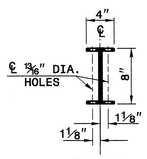

PLAN

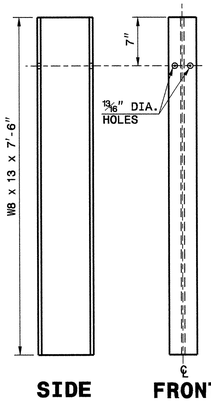

SIDE FRONT

DETAIL F
"W8 X 13 X 7'-6" STEEL POST

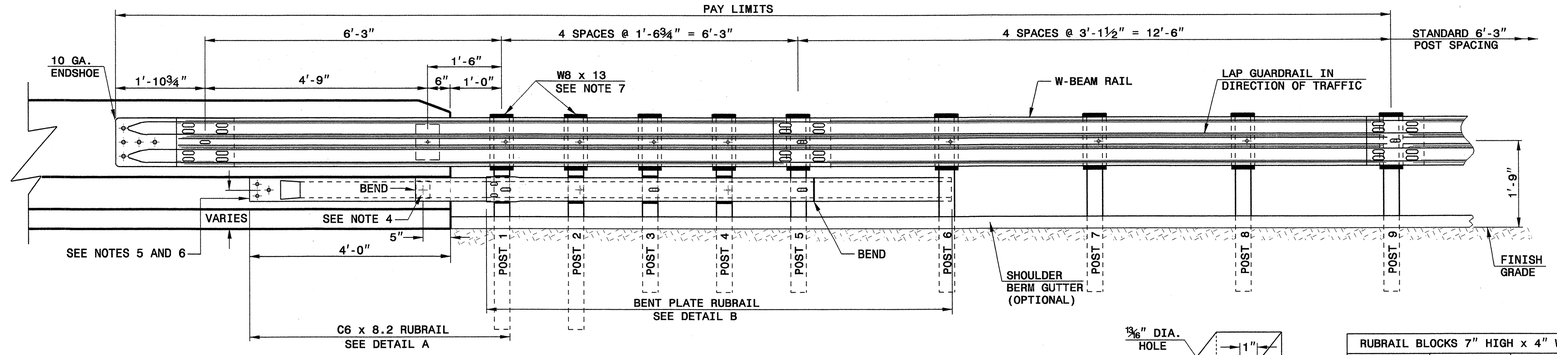

ELEVATION

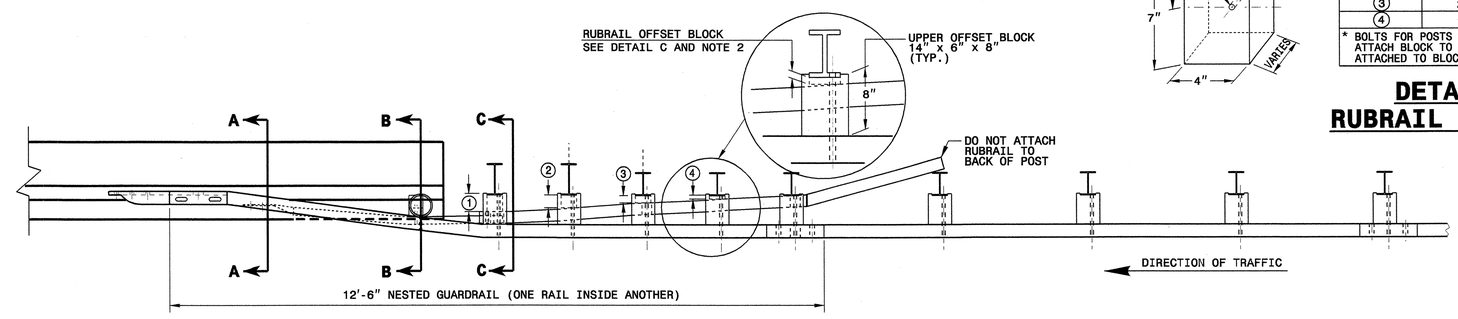

PLAN

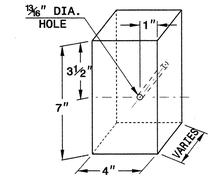

RUBRAIL BLOCKS 7" HIGH x 4" WIDE		
POST	THICKNESS	BOLT LENGTH
1	4¼"	9"
2	3¼"	5" *
3	2"	6"
4	1"	3" *

* BOLTS FOR POSTS 2 AND 4 ARE USED TO ATTACH BLOCK TO POST. RUBRAIL NOT ATTACHED TO BLOCK.

DETAIL C
RUBRAIL BLOCKOUT

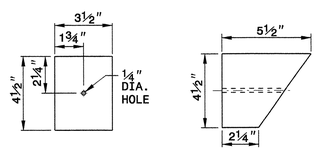

FRONT SIDE

DETAIL D
SLOPED RUBRAIL BLOCKOUT

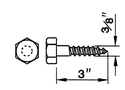

DETAIL E
LAG BOLT

GENERAL NOTES:

1) POSTS 1 THROUGH 5 REQUIRE AN ADDITIONAL HOLE TO ATTACH LOWER BLOCKOUTS AND/OR RUBRAIL.
2) RUBRAIL BLOCKOUTS LOCATED ON POSTS 1 THROUGH 4 ARE OFFSET DRILLED AND SECURED WITH ⅝" BUTTONHEAD BOLTS (SEE CHART FOR BOLT LENGTHS). SECURE BLOCKS ONLY TO POSTS 2 AND 4. SECURE RUBRAIL AND BLOCKOUTS TO POSTS 1 AND 3. RUBRAIL IS SECURED TO POST 5 WITH A ⅝" x 4½" BUTTONHEAD BOLT. RUBRAIL IS FLARED TO BACK OF POST 6 AND NOT SECURED.
3) STEEL SPACER TUBE IS A SCHEDULE 40 GALVANIZED PIPE 6" INSIDE DIAMETER x 9" LONG. ATTACH TUBE TO GUARDRAIL ONLY WITH ⅝" x 1¼" LONG BUTTONHEAD BOLT AND RECTANGULAR PLATE WASHER.
4) SEE DETAIL D FOR SLOPED RUBRAIL BLOCKOUT. BLOCKOUT IS ATTACHED TO RAIL ELEMENT ONLY. USE ⅜" x 3" LAG BOLT WITH FLAT WASHER.
5) SHOP FABRICATE THE C6x8.2 RUBRAIL END TO BE CONSISTENT WITH THE SLOPE OF THE JERSEY SHAPE AND ATTACH FLUSH WITH THE SLOPED TOE OF THE BARRIER OR BRIDGE RAIL.
6) ANCHORAGE:
   (a) AT EXISTING BRIDGE RAIL AND NEW OR EXISTING BARRIERS, RUBRAIL SHALL BE ANCHORED USING THREE ⅝" x 6" CHEMICALLY ANCHORED BOLTS WITH WASHERS.
   (b) AT EXISTING BRIDGE RAIL AND NEW OR EXISTING BARRIERS, THE W-BEAM END SHOE SHALL BE ANCHORED USING A 4 BOLT HOLD-DOWN PLATE AS SHOWN ON DETAIL 857D01 SHEET 6. A 4 BOLT INSERT ASSEMBLY IS ALLOWED ON PRECAST REINFORCED CONCRETE BARRIER (857D01). THE W-BEAM END SHOE SHALL BE INSTALLED BEHIND THE NESTED W-BEAM ELEMENTS.
   (c) AT NEW BRIDGE RAIL, THE W-BEAM END SHOE AND RUBRAIL SHALL BE ANCHORED AS DETAILED ON THE STRUCTURE PLANS.
7) POSTS 1 AND 2 ARE W8 x 13, 7'-6" LONG. ALL OTHER POSTS IN THE ANCHOR UNIT ARE W6 x 8.5.

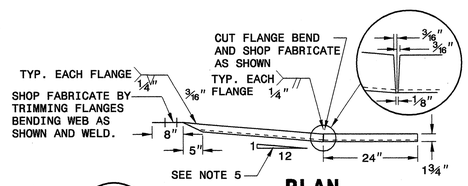

PLAN

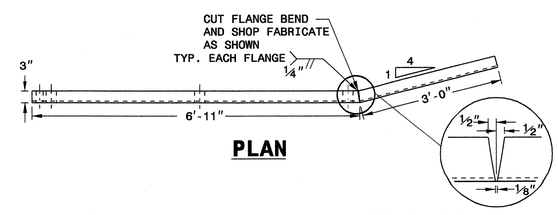

PLAN

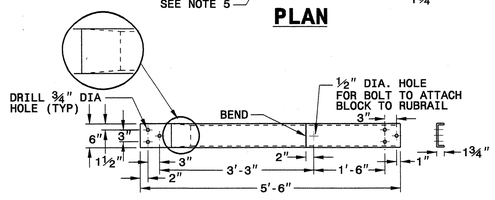

ELEVATION

DETAIL A
C6 x 8.2 RUBRAIL

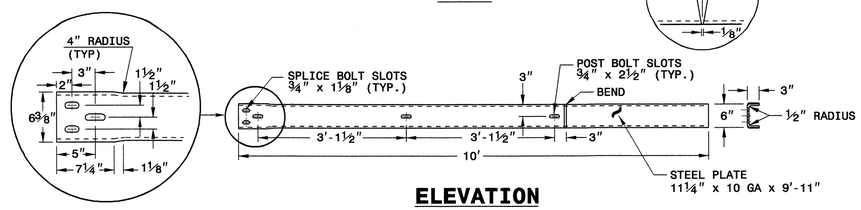

ELEVATION

DETAIL B
BENT PLATE RUBRAIL

NORTH CAROLINA PROFESSIONAL SEAL 022966 ENGINEER JOEL S. HOWE, JR.
10/13/04

DESIGN SERVICES UNIT
STANDARDS AND SPECIAL DESIGN
Office 919-250-4128 FAX 919-250-4119

GUARDRAIL ANCHOR UNIT TYPE B-77

ORIGINAL BY:	CONNDOT	DATE:	10-01-00
MODIFIED BY:	E.E. WARD	DATE:	04-07-04
CHECKED BY:	C.B. Kerry	DATE:	4-12-04
FILE SPEC.:			

08-APR-2004 11:36
W:\Special Details\ericward\Misc. guardrail\NCHRP350 Approved B-77 ConnDot.dgn
ericward AT D:\c12260

PROJECT REFERENCE NO.	SHEET NO.
112.104401	2-H

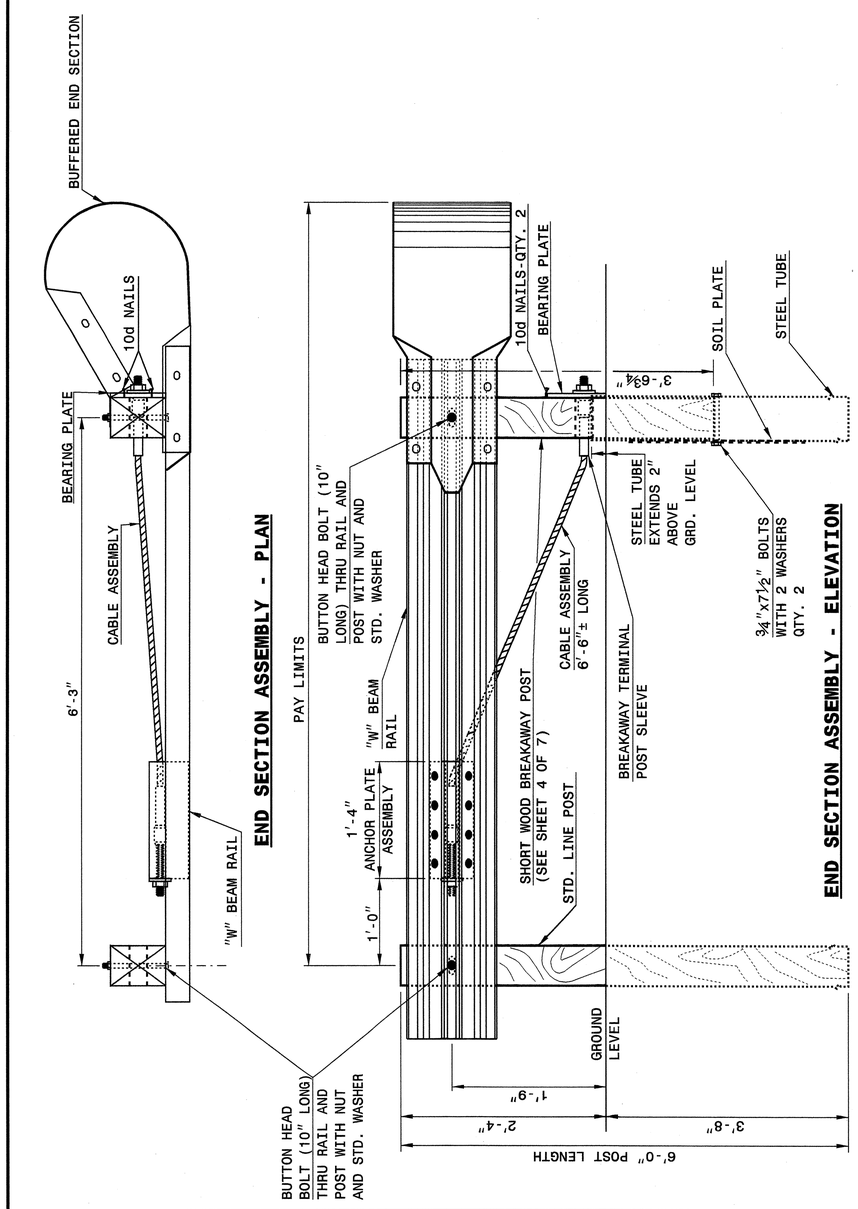

STATE OF NORTH CAROLINA DEPT. OF TRANSPORTATION DIVISION OF HIGHWAYS RALEIGH, N.C.

ENGLISH DETAIL DRAWING FOR **GUARDRAIL INSTALLATION**

SHEET 1 OF 7 **862D02**

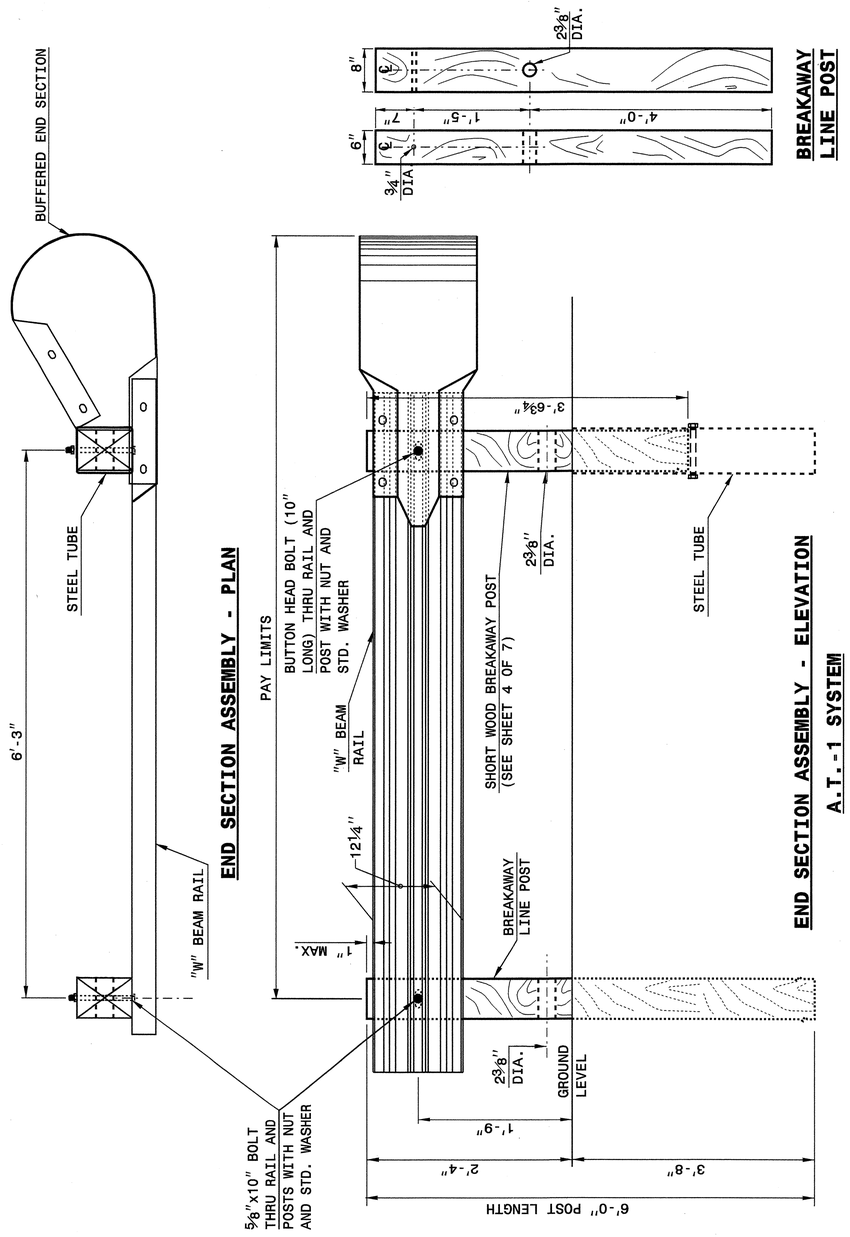

STATE OF NORTH CAROLINA DEPT. OF TRANSPORTATION DIVISION OF HIGHWAYS RALEIGH, N.C.

ENGLISH DETAIL DRAWING FOR **GUARDRAIL INSTALLATION**

SHEET 2 OF 7 **862D02**

STATE OF NORTH CAROLINA DEPT. OF TRANSPORTATION DIVISION OF HIGHWAYS RALEIGH, N.C.

ENGLISH DETAIL DRAWING FOR **GUARDRAIL INSTALLATION**

SHEET 1 OF 7 **862D02**

STATE OF NORTH CAROLINA DEPT. OF TRANSPORTATION DIVISION OF HIGHWAYS RALEIGH, N.C.

ENGLISH DETAIL DRAWING FOR **GUARDRAIL INSTALLATION**

SHEET 2 OF 7 **862D02**

NORTH CAROLINA PROFESSIONAL SEAL 022966 ENGINEER JOEL S. HOWARD

10/13/04

DESIGN SERVICES UNIT
STANDARDS AND SPECIAL DESIGN
Office 919-250-4128 FAX 919-250-4119

SEE PLATE FOR TITLE

ORIGINAL BY: 2002 STD.862.02 DATE:
MODIFIED BY: E.E. WARD DATE: 02-09-03
CHECKED BY: Joel S. Howard DATE: 4-29-04
FILE SPEC.: /gsf/stds/02todetail/english/86202/862d02.dgn

29-APR-2004 11:01
W:\Special Details\ericward\stds\02' Stds to Special Details\english\86202\0862d02.dgn
ericward AT DS212260

6/14/99

STATE OF NORTH CAROLINA
DEPT. OF TRANSPORTATION
DIVISION OF HIGHWAYS
RALEIGH, N.C.

ENGLISH DETAIL DRAWING FOR
GUARDRAIL INSTALLATION

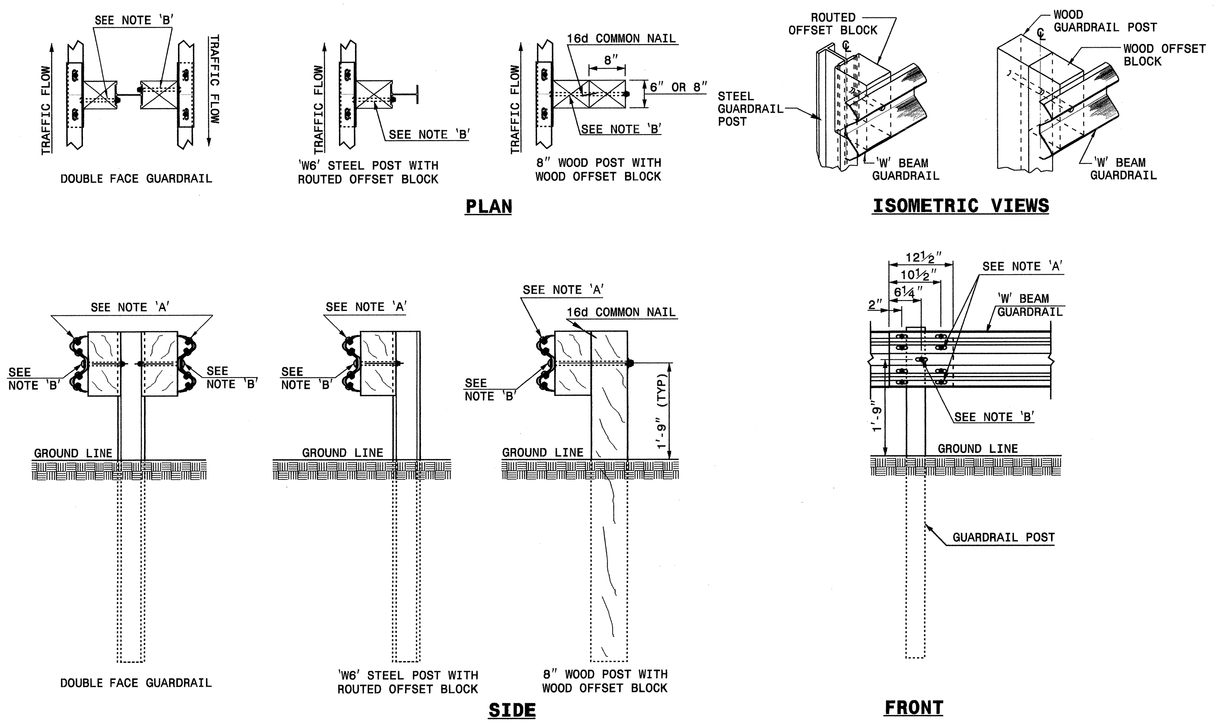

NOTES:
A - ⅝" DIA. BUTTON HEAD SPLICE BOLT 1¼" LONG (8 REQ. PER SPLICE JOINT).
B - ⅝" DIA. BUTTON HEAD BOLT 7½"/9" LONG WITH NUT FOR BOLTING 6"/8" ROUTED OFFSET BLOCK TO STEEL POSTS OR
⅝" DIA. BUTTON HEAD BOLT 18" LONG WITH STD. WASHER UNDER NUT FOR BOLTING TO WOOD POSTS (1 REQ. PER LOCATION)
C - FIELD PUNCHING OF HOLES INTO GUARDRAIL SHALL BE AS DIRECTED BY THE ENGINEER.

TYPICAL GUARDRAIL AND GUARDRAIL POST ALTERNATIVES

SHEET 3 OF 7
862D02

STATE OF NORTH CAROLINA
DEPT. OF TRANSPORTATION
DIVISION OF HIGHWAYS
RALEIGH, N.C.

ENGLISH DETAIL DRAWING FOR
GUARDRAIL INSTALLATION

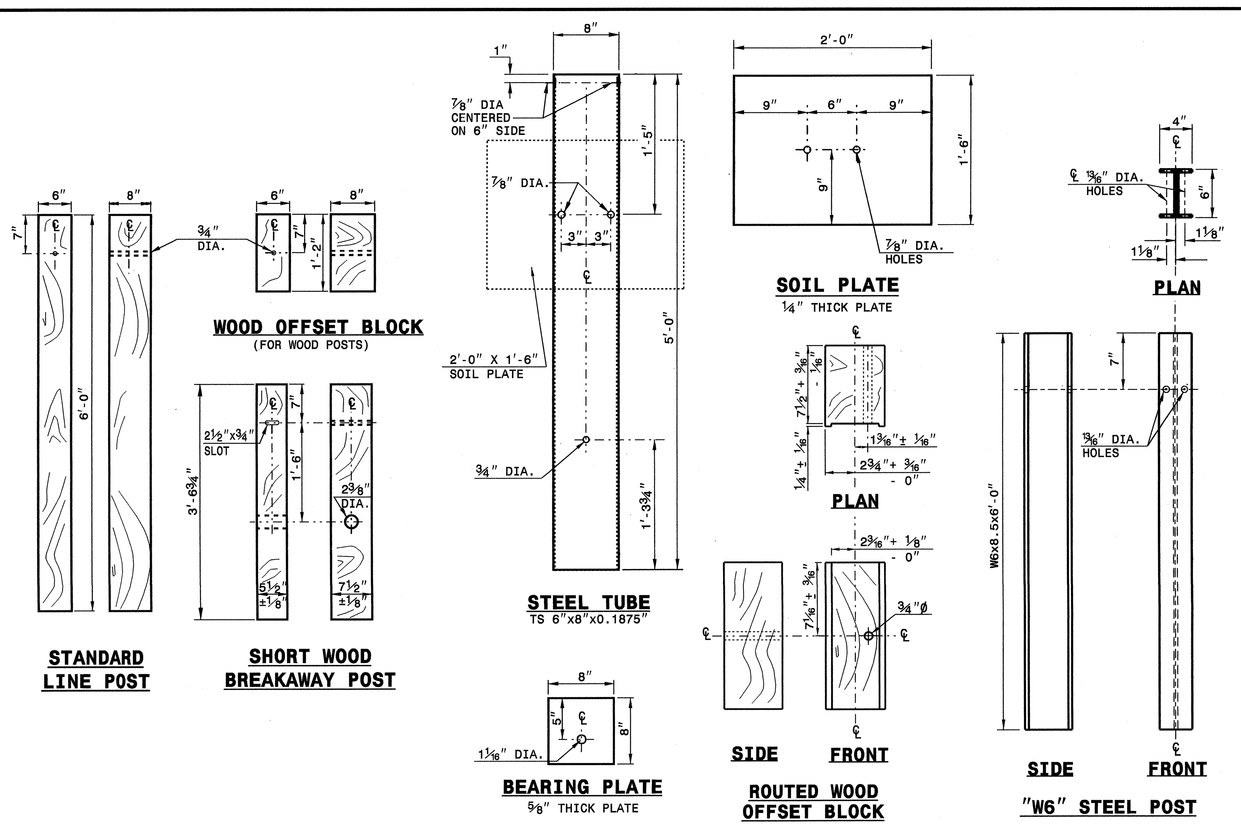

SYSTEM PARTS

SHEET 4 OF 7
862D02

STATE OF NORTH CAROLINA
DEPT. OF TRANSPORTATION
DIVISION OF HIGHWAYS
RALEIGH, N.C.

ENGLISH DETAIL DRAWING FOR
GUARDRAIL INSTALLATION

DESIGN SERVICES UNIT
STANDARDS AND SPECIAL DESIGN
Office 919-250-4128 FAX 919-250-4119

ORIGINAL BY: 2002 STD. 862.02 DATE: 02-08-03
NAME: E.E. WARD DATE: 4-29-04
CHECKED BY: DATE:
FILE SPEC.: /usr/stds/02standard/english/862d02/862d02.dgn

SEE PLATE FOR TITLE

NORTH CAROLINA PROFESSIONAL SEAL 02986 ENGINEER JOEL E. HAMILTON
10/3/04

PROJECT REFERENCE NO. 112.10410
SHEET NO. 2-I

PROJECT REFERENCE NO.	SHEET NO.
112.104401	2-J

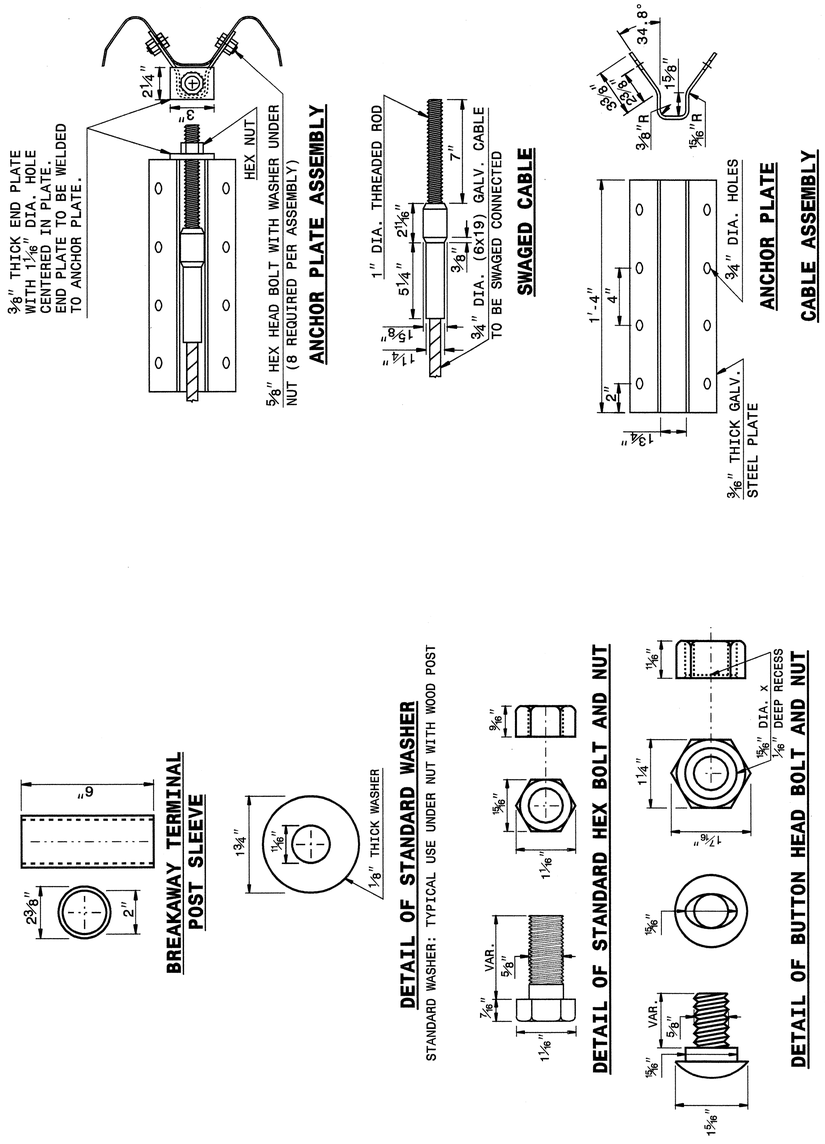

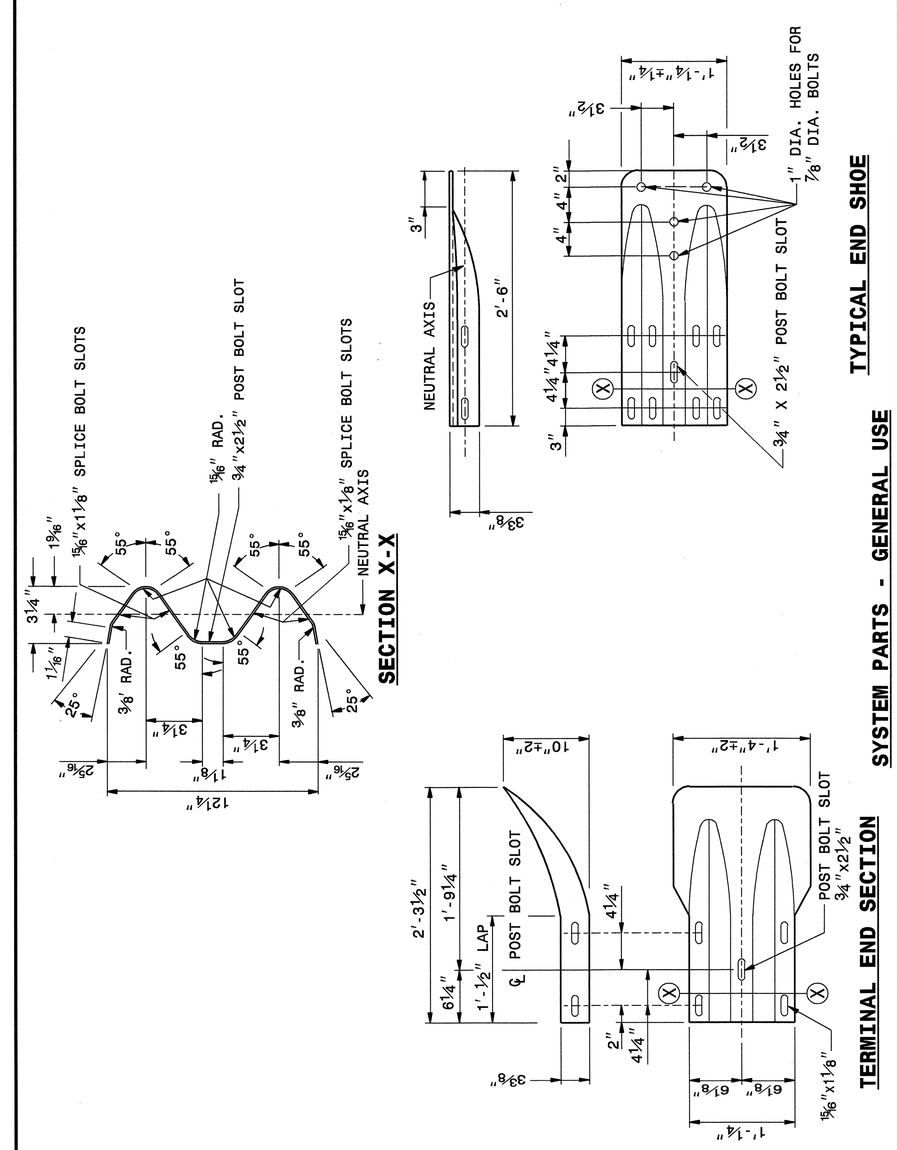

NORTH CAROLINA PROFESSIONAL SEAL 022966 ENGINEER JOEL S. HOWERTON
10/13/04

DESIGN SERVICES UNIT
STANDARDS AND SPECIAL DESIGN
Office 919-250-4128 FAX 919-250-4119

SEE PLATE FOR TITLE

ORIGINAL BY: 2002 STD.862.02 DATE:
MODIFIED BY: E.E. WARD DATE: 02-09-03
CHECKED BY: DATE: 4-29-04
FILE SPEC.: /usr/stds/02todetail/english/86202/862d02.dgn

29-APR-2004 11:01
W:\Special Details\ericward\stds\02' Stds to Special Details\english\86202\0862d02.dgn
ericward AT US212260

5/14/99

PROJECT REFERENCE NO.	SHEET NO.
112.104401	2-K

STATE OF
NORTH CAROLINA
DEPT. OF TRANSPORTATION
DIVISION OF HIGHWAYS
RALEIGH, N.C.

ENGLISH DETAIL DRAWING FOR
GUARDRAIL INSTALLATION

SHEET 7 OF 7
862D02

STATE OF
NORTH CAROLINA
DEPT. OF TRANSPORTATION
DIVISION OF HIGHWAYS
RALEIGH, N.C.

ENGLISH DETAIL DRAWING FOR
GUARDRAIL INSTALLATION

SHEET 7 OF 7
862D02

NORTH CAROLINA PROFESSIONAL SEAL 022966 ENGINEER JOEL S. HOMESLEY
10/13/04

DESIGN SERVICES UNIT
STANDARDS AND SPECIAL DESIGN
Office 919-250-4128 FAX 919-250-4119

SEE PLATE FOR TITLE

ORIGINAL BY: 2002 STD.862.02 DATE:
MODIFIED BY: E.E. WARD DATE: 02-09-03
CHECKED BY: DATE: 4-29-04
FILE SPEC.: /usr/stds/02todetail/english/86202/862d02.dgn

5/14/99
29-APR-2004 14:01
W:\Special Details\ericward\stds\02' Stds to Special Details\english\86202\0862d02.dgn
ericward AT DS212260

PROJECT REFERENCE NO.	SHEET NO.
112.104401	2-L

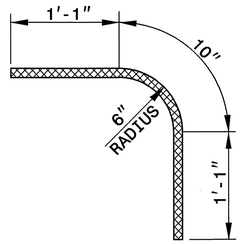

CORNER BARS "L"

GENERAL NOTES:

1. USE CLASS "B" CONCRETE THROUGHOUT.
2. CONSTRUCT CONCRETE BOX IN ACCORDANCE WITH SECTION 825 OF THE STANDARD SPECIFICATIONS.
3. FORMS ARE TO BE USED FOR CONSTRUCTION OF THIS DRAINAGE STRUCTURE.
4. ADJUST LENGTH OF STEEL BARS AS NEEDED TO COMPENSATE FOR PIPES AND GRATE OPENINGS.
5. CONFORM REINFORCING STEEL TO ASTM A 615, GRADE 400.
6. CUT OR BEND STEEL BARS AS NEEDED TO PROVIDE 2" CLEARANCE AROUND PIPES AS DIRECTED BY THE ENGINEER.
7. LOCATE MANHOLE AS FIELD CONDITIONS DICTATE AND AS DIRECTED BY THE ENGINEER.
8. ALL EXPOSED CONCRETE CORNERS TO BE CHAMFERED 1".
9. THE BASE SLAB AND THE QUANTITIES ADJUSTED IN ACCORDANCE WITH STD. DWG. NO. 840.00.
10. PROVIDE STEPS, ON 12" CENTERS, IN ACCORDANCE WITH STD. DWG. NO. 840.66.

BILL OF MATERIAL

BAR	QTY	SIZE	LENGTH	WEIGHT
A	18	#5	8'-7"	161.1
B	28	#5	5'-4"	155.8
C	10	#5	9'-3"	96.5
D	15	#5	6'-0"	93.9
E	42	#5	7'-7"	332.2
F	40	#5	13'-4"	556.3
G	42	#5	4'-4"	189.8
L	8	#5	3'-0"	25.0
TOTAL REINF. STEEL (lbs)				1610.6
CLASS "B" CONC. (yds^3)				13.7

NO DEDUCTIONS HAVE BEEN MADE FOR PIPES OR MANHOLE OPENINGS.

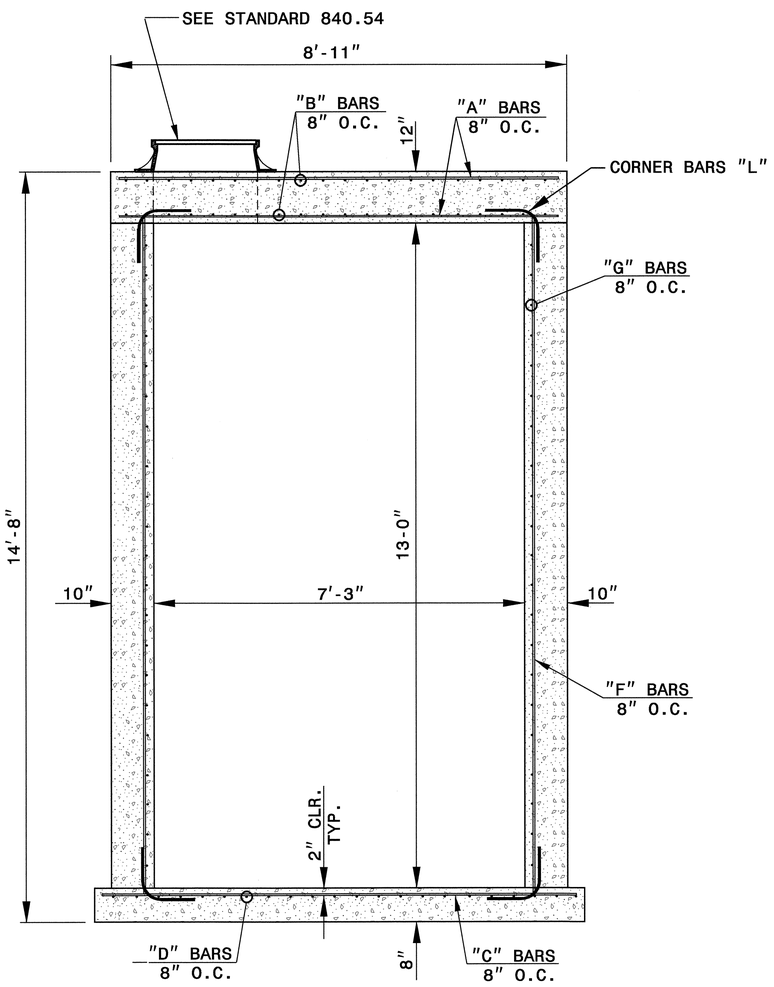

SECTION "X-X"

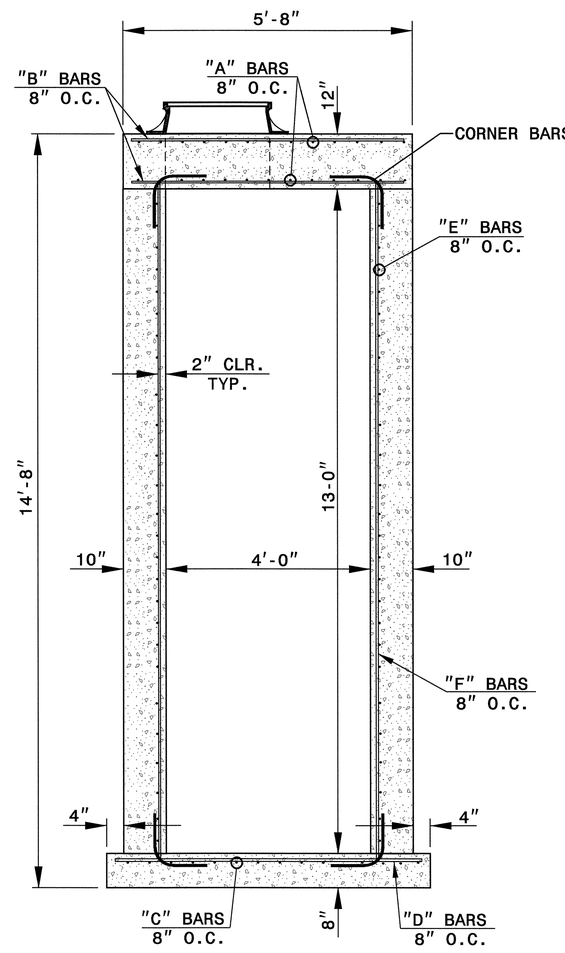

SECTION "Y-Y"

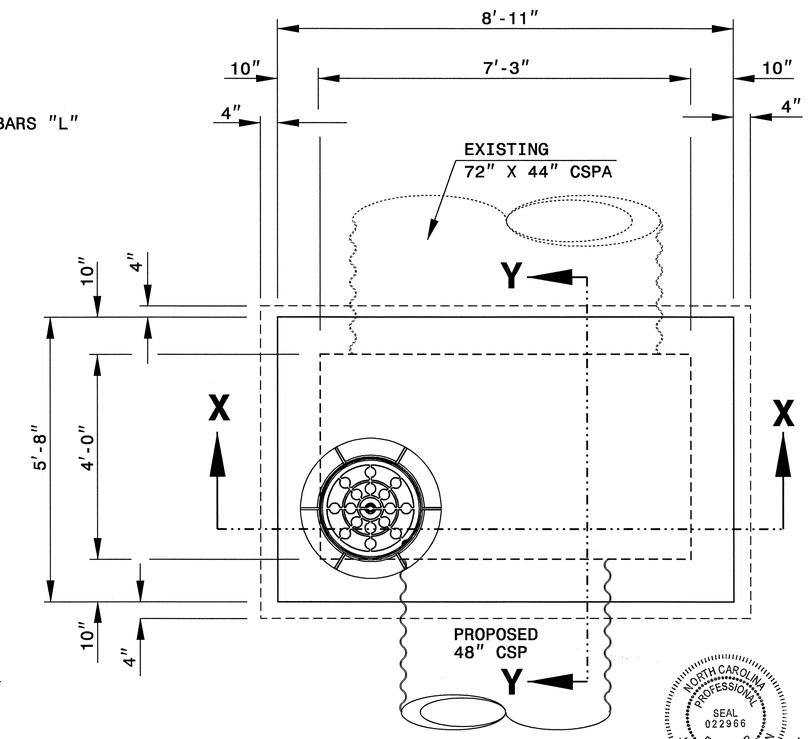

PLAN VIEW

NORTH CAROLINA PROFESSIONAL SEAL 022966 ENGINEER JOHN S. HOWERTON
10/13/04

USE WITH STRUCTURE # 7

DESIGN SERVICES UNIT
STANDARDS AND SPECIAL DESIGN
Office 919-250-4128 FAX 919-250-4119

DETAIL OF TRAFFIC BEARING JUNCTION BOX WITH MANHOLE

ORIGINAL BY: E.E. WARD DATE: 9-19-03
MODIFIED BY: E.E. WARD DATE: 10-12-04
CHECKED BY: DATE:
FILE SPEC.: /usr/details/metric/stand/jb3.4mx2.2m.dgn

12-OCT-2004 15:04
W:\Special Details\ericward\usr\details\stand\jb11.33x4x11.16.dgn
ericward AT D2C2260

5/14/99

PROJECT REFERENCE NO.	SHEET NO.
112.104401	2-M

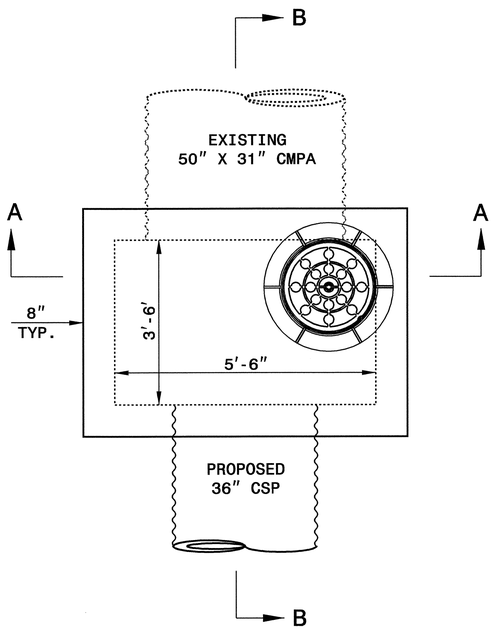

PLAN

GENERAL NOTES:
- CONSTRUCT THE BASE SLAB BY FORMING.
- SEE STD. DWG. 840.00 FOR CONSTRUCTION OF BASE SLAB IF PIPE IS SET INTO BASE SLAB.
- CLASS 'B' CONCRETE SHALL BE USED THROUGHOUT.
- CONSTRUCTION OPTIONS: MONOLITHIC POUR; CONSTRUCTION JOINTS AT UNION OF WALLS WITH FLOOR AND/OR TOP SLAB.
- REINFORCING STEEL SHALL BE CUT, BENT OR RELOCATED TO POSITION PIPE AS DIRECTED BY THE ENGINEER.
- CHAMFERE ALL EXPOSED CORNERS 1".
- SEE STD. DRAWING 840.34 FOR CONSTRUCTION OF RISER AND MANHOLE, IF REQURED.
- JUNCTION BOXES OVER 3'-6" IN DEPTH WITH MANHOLES SHALL REQUIRE STEPS TO BE PLACED ON 12" CTRS. REFERENCE STD. NO. 840.66.

BILL OF MATERIAL

BAR	NO.	SIZE	LENGTH	WEIGHT
A	40	#5	6'-6"	271.2
B	46	#5	4'-6"	215.9
C	38	#5	7'-0"	277.4
TOTAL REINF. STEEL (lbs.)				764.5
CLASS "B" CONC. (cu. yds.)				4.7

NO DEDUCTIONS HAVE BEEN MADE FOR PIPES OR MANHOLE OPENINGS

USE WITH STRUCTURE #9

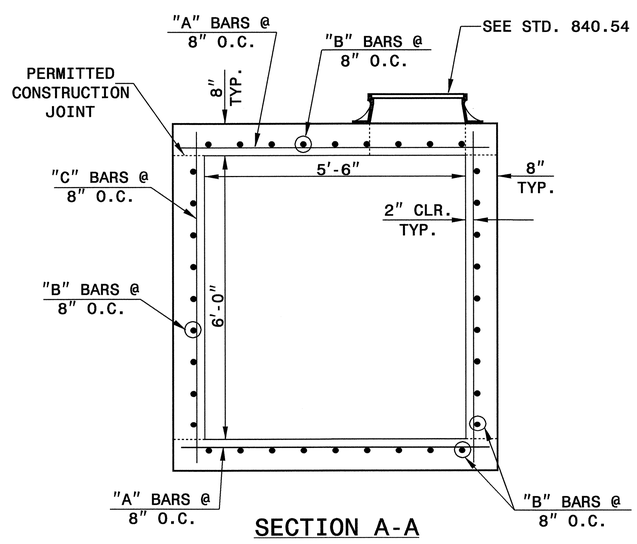

SECTION A-A

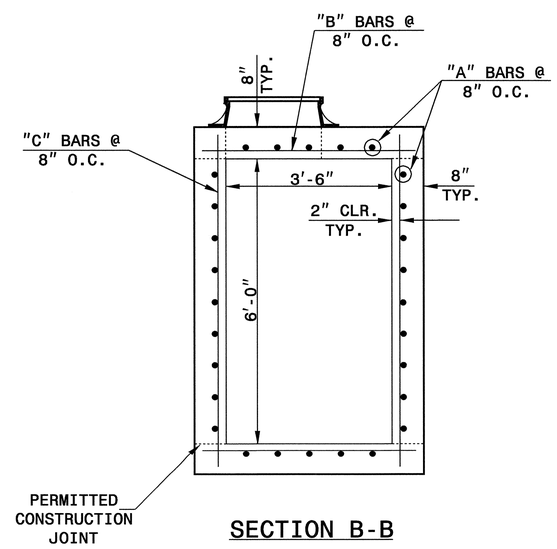

SECTION B-B

NORTH CAROLINA PROFESSIONAL SEAL 022966 ENGINEER JOEL S. HOWERTON
10/13/04

DESIGN SERVICES UNIT
STANDARDS AND SPECIAL DESIGN
Office 919-250-4128 FAX 919-250-4119

DETAIL OF TRAFFIC BEARING JUNCTION BOX WITH MANHOLE

ORIGINAL BY: E.E. WARD DATE: 10-04
MODIFIED BY: DATE:
CHECKED BY: DATE:
FILE SPEC.: \usr\details\stand\jb3.5x5.5x6.0.dgn

12-OCT-2004 14:06
W:\Special Details\eriqward\usr\details\stand\jb3.5x5.5x6.0.dgn
eriqward AT DS212260

5/14/99

PROJECT REFERENCE NO.	SHEET NO.
112.104401	2-8

STATE OF
NORTH CAROLINA
DEPT. OF TRANSPORTATION
DIVISION OF HIGHWAYS
RALEIGH, N.C.

ENGLISH DETAIL
GUIDE FOR GRADING SUBGRADE
INTERSTATE AND FREEWAY
(ROUND BOTTOM DITCH & MEDIAN DITCH)

SHEET 1 OF 1
225D01

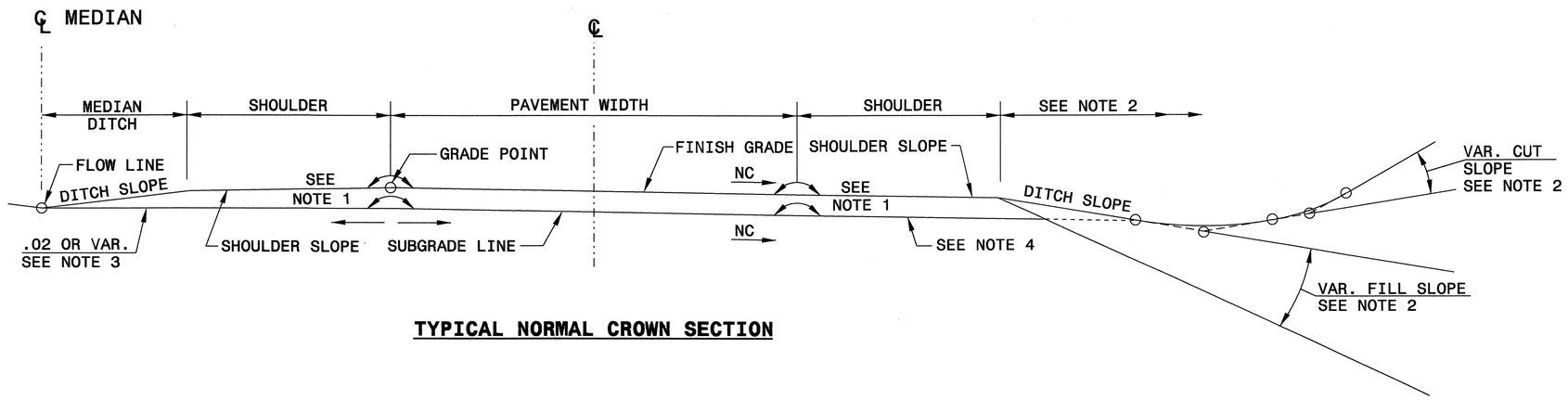

TYPICAL NORMAL CROWN SECTION

1. SEE TYPICAL SECTION FOR LATERAL LOCATION OF ROLLOVER.
2. SEE PLANS FOR METHOD OF CONSTRUCTING CUT AND FILL SLOPES.
3. SUBGRADE LINE WILL NOT UNDERCUT DITCH GRADE AT ANY POINT.
4. OUTSIDE SHOULDER SUBGRADES ARE THE SAME RATE OF SLOPE AS THE ADJACENT TRAVEL LANE SUBGRADES **UNLESS** CONSTRUCTED ON THE HIGH SIDE OF SUPERELEVATION OR CONSIST OF 10′ AND WIDER FULL DEPTH PAVEMENT (SEE STDS. 560.01 AND 560.02).

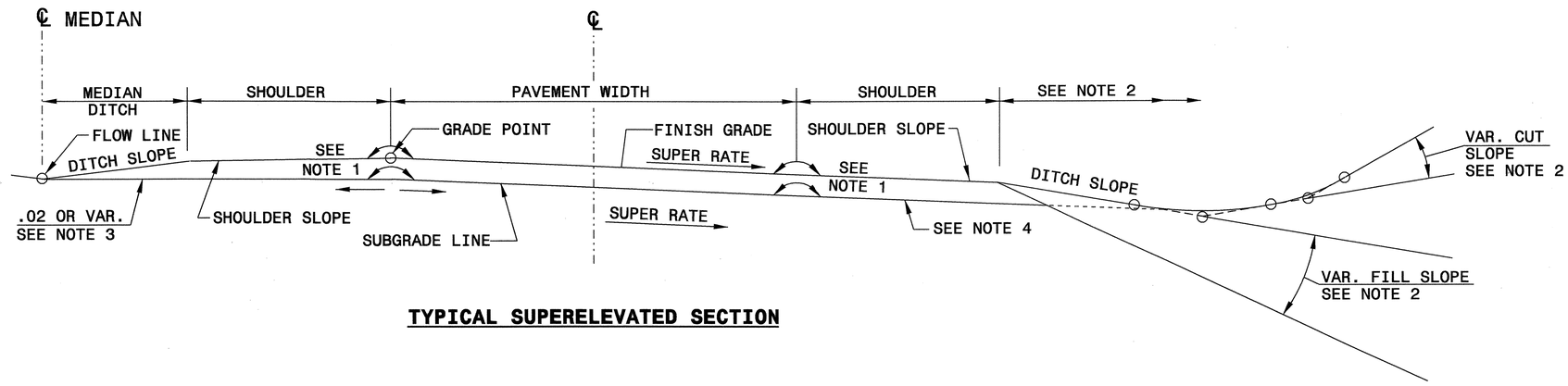

TYPICAL SUPERELEVATED SECTION

STATE OF
NORTH CAROLINA
DEPT. OF TRANSPORTATION
DIVISION OF HIGHWAYS
RALEIGH, N.C.

ENGLISH DETAIL DRAWING FOR
GUIDE FOR GRADING SUBGRADE
INTERSTATE AND FREEWAY
(ROUND BOTTOM DITCH & MEDIAN DITCH)

SHEET 1 OF 1
225D01

NORTH CAROLINA PROFESSIONAL SEAL 022966 ENGINEER JOEL S. HOWERTON
10/13/04

DESIGN SERVICES UNIT
STANDARDS AND SPECIAL DESIGN
Office 919-250-4128 FAX 919-250-4119

SEE PLATE FOR TITLE

ORIGINAL BY: 2002 STANDARDS DATE: 01-15-02
MODIFIED BY: E.E. WARD DATE: 04-07-03
CHECKED BY: DATE: 4-03
FILE SPEC.: stds/02stdstode/tails/english/225d01.dgn

10-APR-2003 09:19
W:\Special Details\Vancard\stds\02' Stds to Special Details\english\2250\225d01.dgn
arward Hi DS180660

D203033 Wednesday October 13 2004 i40_rdy_sum JBMauney rd-07oce34

COMPUTED BY: IBM DATE: 101304
CHECKED BY: JL DATE: 101304

DIVISION OF HIGHWAYS
STATE OF NORTH CAROLINA

SUMMARY OF EARTHWORK

IN CUBIC YARDS

LOCATION	UNCLASSIFIED EXCAVATION	UNDERCUT	EMBT + %	BORROW	WASTE
-L- 14+25.00 TO 22+25.00	7169		11580	11580	7169
SUBTOTAL	7169		11580	11580	7169
-L- 32+25.00 TO 36+00.00	4049		2109	2109	4049
SUBTOTAL	4049		2109	2109	4049
PROJECT TOTAL	11218		13689	13689	11218
5% FOR BORROW PIT				684	
GRAND TOTAL	11218			14373	
SAY	11250			14400	

Approximate quantities only. Unclassified excavation, borrow excavation, fine grading, clearing and grubbing, and removal of existing pavement will be paid for at the contract lump sum price for "Grading".

PROJECT REFERENCE NO. 11210440I
SHEET NO. 3-A

STATE OF NORTH CAROLINA
DIVISION OF HIGHWAYS

SUMMARY OF QUANTITIES

STATE OF NORTH CAROLINA
DIVISION OF HIGHWAYS
ROADWAY SUMMARY OF QUANTITIES FOR CONTRACT - C201320

ItemNumber	Sec #	Quantity	Unit	Description
0000100000-N	800	Lump Sum		MOBILIZATION
0043000000-N	226	Lump Sum		GRADING
0050000000-E	226	1	ACR	SUPPLEMENTARY CLEARING & GRUBBING
0220000000-E	SP	14,000	TON	ROCK EMBANKMENT
0241000000-E	SP	12,000	SY	GENERIC GRADING ITEM RING NETS
0255000000-E	SP	1,500	TON	GENERIC GRADING ITEM SELECT MATERIAL, CLASS VI (TOE SCOUR PROTECTION)
0257000000-E	SP	2,000	LF	GENERIC GRADING ITEM TENSIONED ROCK BOLTS
0318000000-E	300	65	TON	FOUNDATION CONDITIONING MATERIAL, MINOR STRS
0684000000-E	310	84	LF	**" BIT COAT CS PIPE CULVERTS, TYPE B ****** THICK (24", 0.138")
0684000000-E	310	60	LF	**" BIT COAT CS PIPE CULVERTS, TYPE B ****** THICK (36", 0.168")
0684000000-E	310	56	LF	**" BIT COAT CS PIPE CULVERTS, TYPE B ****** THICK (48", 0.168")
0714000000-E	310	368	LF	18" BIT COAT CS PIPE CULVERTS, TYPE B 0.064" THICK
0720000000-E	310	40	LF	24" BIT COAT CS PIPE CULVERTS, TYPE B 0.064" THICK
0995000000-E	340	105	LF	PIPE REMOVAL
0996000000-N	350	9	EA	PIPE CLEAN-OUT
1297000000-E	607	1,330	SY	MILLING ASPHALT PAVEMENT, ***" DEPTH (2")
1330000000-E	607	133	SY	INCIDENTAL MILLING
1491000000-E	610	2,200	TON	ASPHALT CONC BASE COURSE, TYPE B25.0C
1508000000-E	610	435	TON	ASPHALT CONC INTERMEDIATE COURSE, TYPE I19.0D
1550000000-E	610	713	TON	ASPHALT CONC SURFACE COURSE, TYPE S12.5D

ItemNumber	Sec #	Quantity	Unit	Description
1560000000-E	620	95	TON	ASPHALT BINDER FOR PLANT MIX, GRADE PG 64-22
1565000000-E	620	21	TON	ASPHALT BINDER FOR PLANT MIX, GRADE PG 70-22
1570000000-E	620	35	TON	ASPHALT BINDER FOR PLANT MIX, GRADE PG 76-22
1840000000-E	665	1,175	LF	MILLED RUMBLE STRIPS
1891000000-E	SP	165	SY	GENERIC PAVING ITEM UNREINFORCED CONCRETE
2253000000-E	840	1	CY	PIPE COLLARS
2286000000-N	840	12	EA	MASONRY DRAINAGE STRUCTURES
2297000000-E	840	19	CY	MASONRY DRAINAGE STRUCTURES
2308000000-E	840	4	LF	MASONRY DRAINAGE STRUCTURES
2396000000-N	840	6	EA	FRAME WITH COVER, STD 840.54
2407000000-N	840	6	EA	STEEL FRAME WITH TWO GRATES, STD 840.37
2556000000-E	846	75	LF	SHOULDER BERM GUTTER
2724000000-E	857	725	LF	PRECAST REINFORCED CONCRETE BARRIER, SINGLE FACED
3030000000-E	862	75	LF	STEEL BM GUARDRAIL
3150000000-N	862	5	EA	ADDITIONAL GUARDRAIL POSTS
3270000000-N	SP	1	EA	GUARDRAIL ANCHOR UNITS, TYPE 350
3317000000-N	862	3	EA	GUARDRAIL ANCHOR UNITS, TYPE B-77
3360000000-E	863	400	LF	REMOVE EXISTING GUARDRAIL
3642000000-E	876	3,000	TON	PLAIN RIP RAP, CLASS A
3649000000-E	876	5	TON	PLAIN RIP RAP, CLASS B
3656000000-E	876	5,500	SY	FILTER FABRIC FOR DRAINAGE
4400000000-E	1110	100	SF	WORK ZONE SIGNS (STATIONARY)
4405000000-E	1110	100	SF	WORK ZONE SIGNS (PORTABLE)
4415000000-N	1115	2	EA	FLASHING ARROW PANELS, TYPE C
4420000000-N	1120	2	EA	CHANGEABLE MESSAGE SIGNS

ItemNumber	Sec #	Quantity	Unit	Description
4430000000-N	1130	325	EA	DRUMS
4460000000-N	1155	6	EA	WARNING LIGHTS (TYPE B)
4465000000-N	1160	2	EA	TEMPORARY CRASH CUSHIONS
4475000000-N	1165	1	EA	TRUCK MOUNTED IMPACT ATTENUATOR (45 MPH)
4480000000-N	1165	1	EA	TRUCK MOUNTED IMPACT ATTENUATOR (60 MPH)
4490000000-E	1170	400	LF	PORTABLE CONCRETE BARRIER (ANCHORED)
4590000000-E	SP	400	LF	GENERIC TRAFFIC CONTROL ITEM PORTABLE CONCRETE BARRIER (DEPARTMENT FURNISHED)
4590000000-E	SP	3,700	LF	GENERIC TRAFFIC CONTROL ITEM REMOVE & STOCKPILE PORTABLE CONCRETE BARRIER
4815000000-E	1205	9,500	LF	PAINT PAVEMENT MARKING LINES (6")
4847100000-E	SP	10,000	LF	POLYUREA PAVEMENT MARKING LINES (6")
4855000000-E	1205	14,000	LF	REMOVAL OF PAVEMENT MARKING LINES (6")
4905000000-N	1253	25	EA	SNOWPLOWABLE PAVEMENT MARKERS
4960000000-N	SP	45	EA	GENERIC TRAFFIC CONTROL ITEM REPLACE LENSES IN MARKERS
8990000000-N	SP	7,000	DOL	CONTRACT TIME
		******* BEGIN SCHEDULE AA ******* ******* (2 ALTERNATES) *******		
3980000000-E AA1	SP	100	CY	GENERIC WALL ITEM GROUT FOR TIEBACK ANCHORS FOR WALL @ SLIDE 1
3984000000-E AA1	SP	3,200	SF	GENERIC WALL ITEM PERM ANCHOR TIEBACK WALL @ SLIDE 1
		*** OR ***		
3982000000-N AA2	SP	Lump Sum		GENERIC WALL ITEM ALTERNATE RETENTION SYSTEM @ SLIDE 1
		******* END SCHEDULE AA *******		

ItemNumber	Sec #	Quantity	Unit	Description
		******* BEGIN SCHEDULE AB ******* ******* (2 ALTERNATES) *******		
3980000000-E AB1	SP	250	CY	GENERIC WALL ITEM GROUT FOR TIEBACK ANCHORS FOR WALL @ SLIDE 2
3984000000-E AB1	SP	11,000	SF	GENERIC WALL ITEM PERM ANCHOR TIEBACK WALL @ SLIDE 2
3988000000-E AB1	SP	2,000	TON	GENERIC WALL ITEM SELECT MATERIAL, CLASS VI (WALL @ SLIDE 2)
		*** OR ***		
3982000000-N AB2	SP	Lump Sum		GENERIC WALL ITEM ALTERNATE RETENTION SYSTEM @ SLIDE 2
		******* END SCHEDULE AB *******		

5/28/99
13-OCT-2004 07:52
R:\Roadway\Proj\40_rdy_tsh.dgn
jbMauney AT RD203033
RD203033 Wednesday October 13 2004 SH3 JBMauney rd-07oce34