STATE OF
NORTH CAROLINA
DEPT. OF TRANSPORTATION
DIVISION OF HIGHWAYS
RALEIGH, N.C.

7-06

ENGLISH STANDARD DRAWING FOR

CONCRETE "L" ENDWALL FOR SINGLE PIPE CULVERTS

15" THRU 48" PIPE

SHEET 1 OF 1

838.05

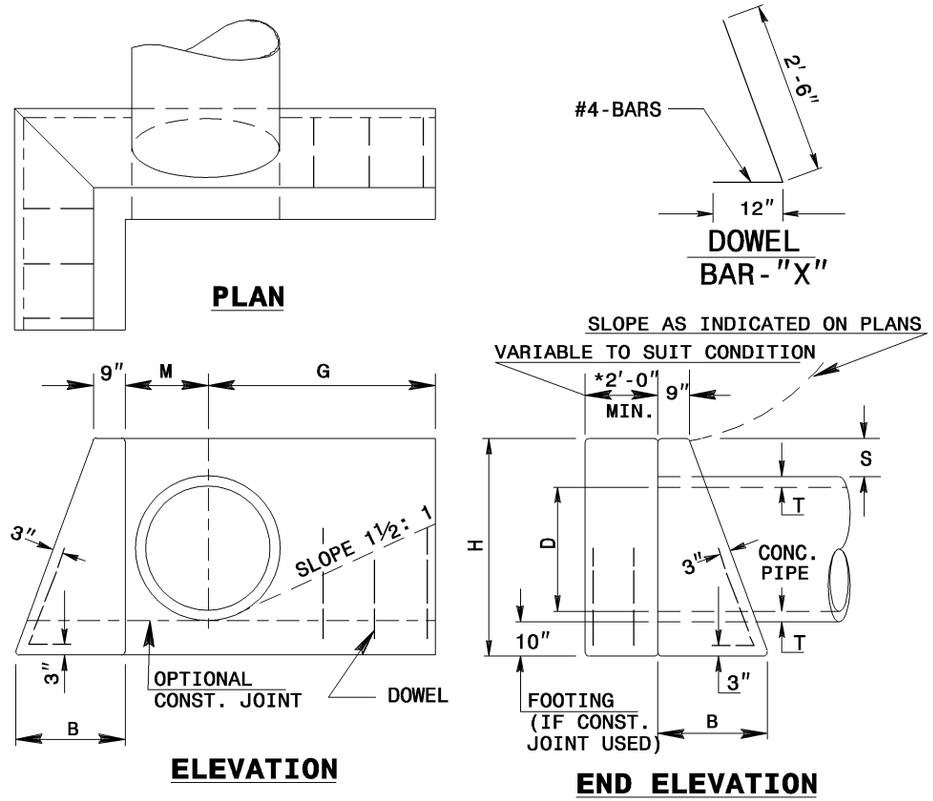

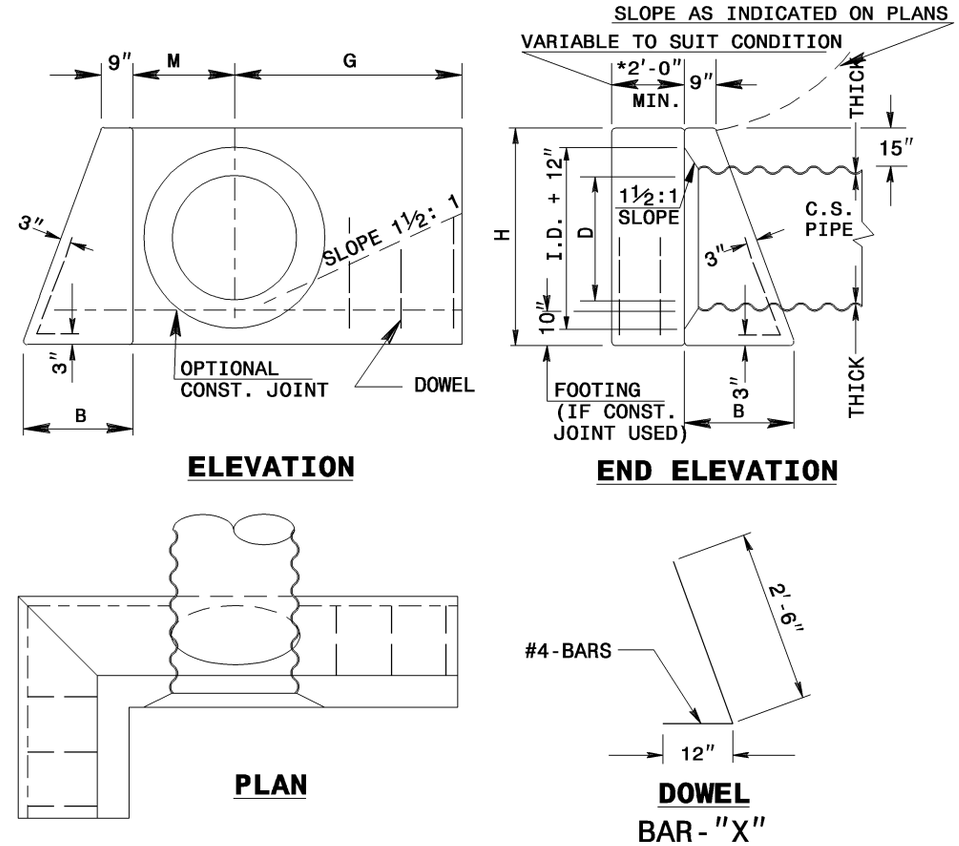

GENERAL NOTES:

- CHAMFER ALL CORNERS 1". USE CLASS "B" CONCRETE.
- PLACE 2 #6 "Y" BARS IN THE TOP OF ALL ENDWALL FOR PIPE CULVERTS 42" AND OVER WITH A MINIMUM OF 3" COVER AND A LENGTH OF 6" LESS THAN ENDWALL LENGTH.
- CONSTRUCT BOTTOM SLAB WITH FORMS.
- WHEN THE CONTRACTOR ELECTS TO USE A CONSTRUCTION JOINT AT THE BOTTOM OF THE PIPE, PLACE BAR "X" DOWELS IN THE BASE AS SHOWN ON PLANS. SPACE BARS APPROXIMATELY ON 12" CENTERS UNLESS OTHERWISE DIRECTED BY THE ENGINEER.
- WHEN THE CONTRACTOR ELECTS TO USE A CONSTRUCTION JOINT AT THE BOTTOM OF THE PIPE AND POUR THE BASE SEPARATELY LEAVE THE POUR ROUGH.
- DO NOT INTERPRET WALL THICKNESS (T) SHOWN FOR THE THICKNESS ACCEPTABLE, BUT IS USED IN COMPUTING ENDWALL QUANTITIES.

REINFORCING QUANTITIES													
DIA.	15"	18"	24"	30"	36"	42" C.S.		42" R.C.		48" C.S.		48" R.C.	
BARS	"X"	"X"	"X"	"X"	"X"	"X"	"Y"	"X"	"Y"	"X"	"Y"	"X"	"Y"
QTY.	5	5	6	6	7	7	2	7	2	8	2	8	2
LBS.	12	12	14	14	16	47		49		52		55	

*QUANTITIES BASED ON 2'-0"

DIMENSIONS AND CONCRETE QUANTITIES												
	R.C.P. DIMENSIONS AND VOLUMES							C.S.P. DIMENSIONS AND VOLUMES				
D	H	B	G	M	S	T	YD^3	H	B	G	M	YD^3
15"	3'-4"	1'-8"	2'-6"	1'-1"	10½"	2¼"	1.0	3'-4"	1'-8"	2'-5"	1'-5"	1.0
18"	3'-7"	1'-10"	2'-11"	1'-3"	10"	2½"	1.2	3'-7"	1'-10"	2'-9"	1'-6"	1.3
24"	4'-2"	2'-1"	3'-9"	1'-6"	10"	3"	1.7	4'-1"	2'-1"	3'-6"	1'-9"	1.8
30"	4'-9"	2'-5"	4'-8"	1'-10"	10"	3½"	2.5	4'-7"	2'-4"	4'-3"	2'-0"	2.4
36"	5'-5"	2'-9"	5'-8"	2'-2"	9½"	4¾"	3.6	5'-1"	2'-7"	5'-0"	2'-3"	3.1
42"	6'-0"	3'-0"	6'-7"	2'-5"	9½"	5¼"	4.6	5'-7"	2'-10"	5'-9"	2'-6"	4.0
48"	6'-7"	3'-4"	7'-5"	2'-9"	9½"	5¾"	6.0	6'-1"	3'-1"	6'-6"	2'-9"	5.1

STATE OF
NORTH CAROLINA
DEPT. OF TRANSPORTATION
DIVISION OF HIGHWAYS
RALEIGH, N.C.

7-06

ENGLISH STANDARD DRAWING FOR

CONCRETE "L" ENDWALL FOR SINGLE PIPE CULVERTS

15" THRU 48" PIPE

SHEET 1 OF 1

838.05