STATE OF
NORTH CAROLINA
DEPT. OF TRANSPORTATION
DIVISION OF HIGHWAYS
RALEIGH, N.C.

7-06

ENGLISH STANDARD DRAWING FOR
FRAME, GRATES, AND HOOD
FOR USE ON STANDARD CATCH BASIN

DETAIL SHOWING TYPES OF GRATES
USE ACCORDING TO WATER FLOW.

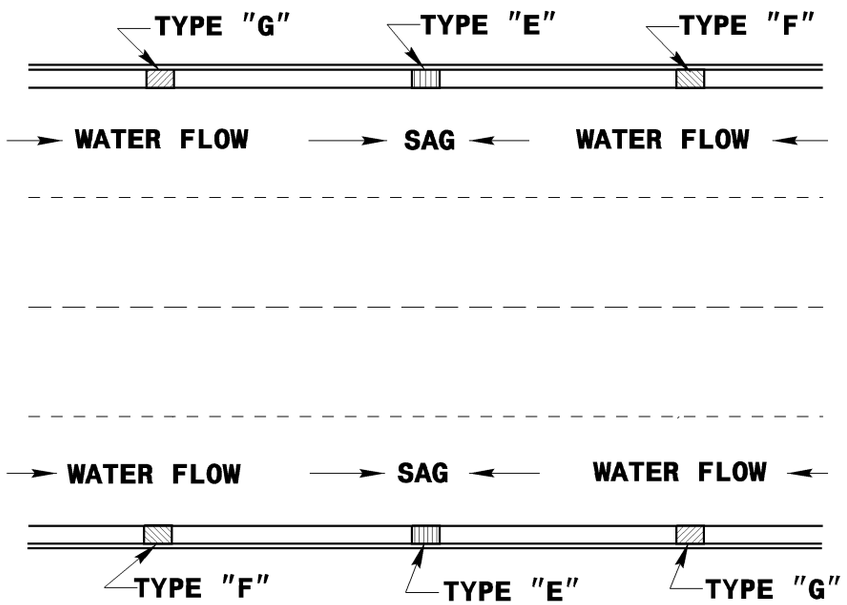

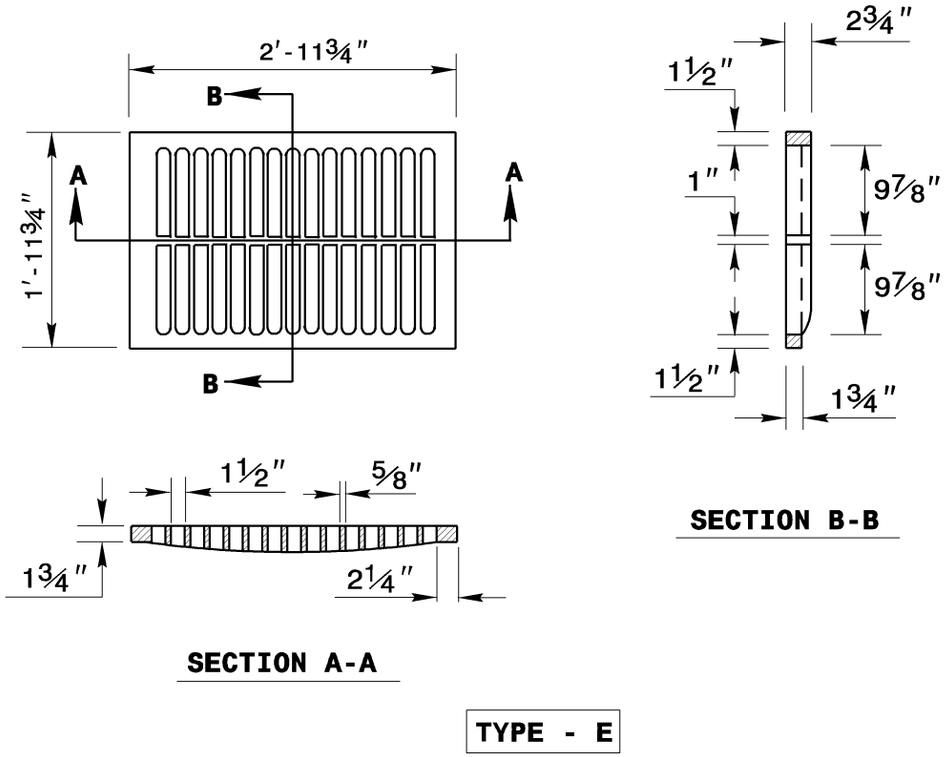

TYPE - E

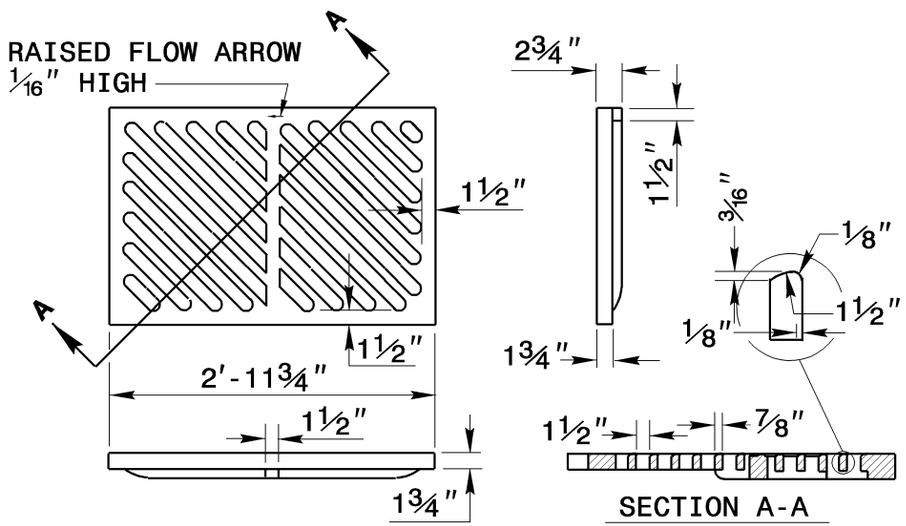

TYPE - F

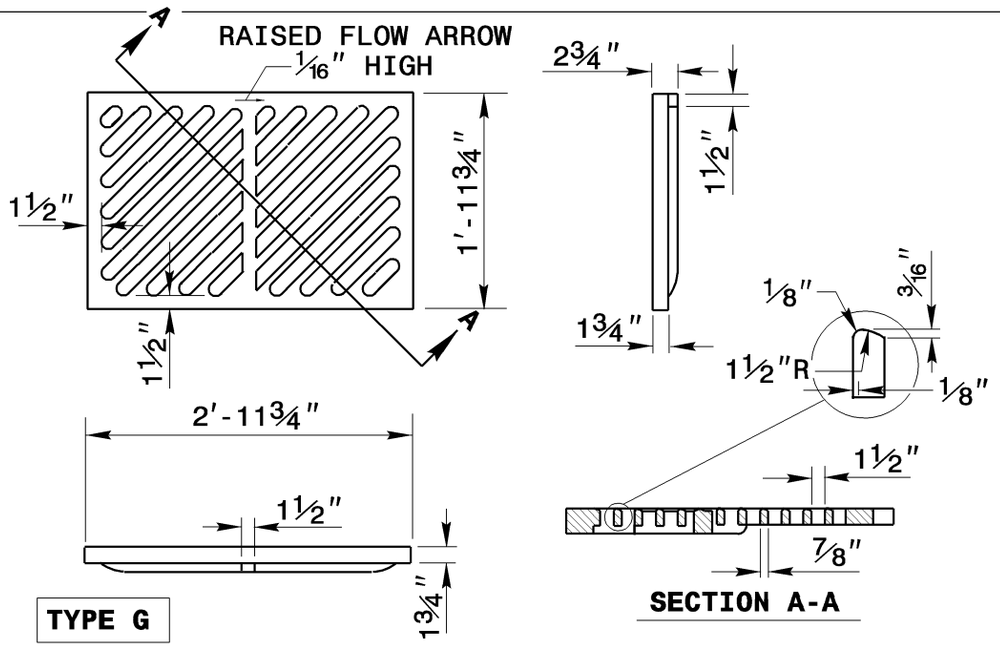

TYPE G

SHEET 2 OF 2
840.03

STATE OF
NORTH CAROLINA
DEPT. OF TRANSPORTATION
DIVISION OF HIGHWAYS
RALEIGH, N.C.

7-06

ENGLISH STANDARD DRAWING FOR
FRAME, GRATES, AND HOOD
FOR USE ON STANDARD CATCH BASIN

SHEET 2 OF 2
840.03