STATE OF
NORTH CAROLINA
DEPT. OF TRANSPORTATION
DIVISION OF HIGHWAYS
RALEIGH, N.C.

7-06

ENGLISH STANDARD DRAWING FOR

BRICK GRATED DROP INLET TYPE 'A'

12" THRU 72" PIPE

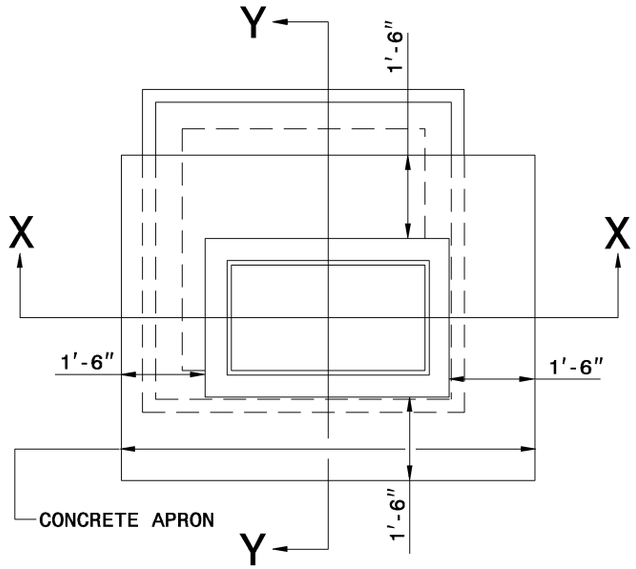

PLAN

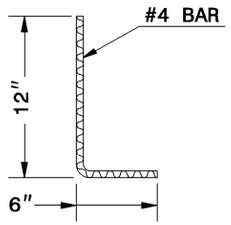

DOWEL-A

GENERAL NOTES:

USE CLASS "B" CONCRETE THROUGHOUT.

JUMBO BRICK WILL BE PERMITTED. CONCRETE BRICK OR 4" SOLID CONCRETE BLOCKS MAY BE USED IN LIEU OF CLAY BRICKS.

PROVIDE ALL DROP INLETS OVER 3'-6" IN DEPTH WITH STEPS 12" ON CENTER. USE STEPS WHICH COMPLY WITH STD. DRAWING 840.66.

USE #4 BAR DOWELS AT 12" CENTERS.

USE FORMS FOR THE CONSTRUCTION OF THE BOTTOM SLAB.

IF REINFORCED CONCRETE PIPE IS SET IN BOTTOM SLAB OF BOX, ADD TO SLAB AS SHOWN ON STD. NO. 840.00.

CONSTRUCT WITH PIPE CROWNS MATCHING.

MAX. DEPTH OF THIS STRUCTURE FROM TOP OF BOTTOM SLAB TO TOP ELEVATION IS 12 FEET.

USE STANDARD FRAMES AND GRATES 840.22 (SHOWN), 840.24(SHOWN), 840.20, 840.29, AND 840.33.

SEE STANDARD DRAWING 840.25 FOR ATTACHMENT OF FRAMES AND GRATES NOT SHOWN.

CHAMFER ALL EXPOSED CORNERS 1".

DRAWING NOT TO SCALE.

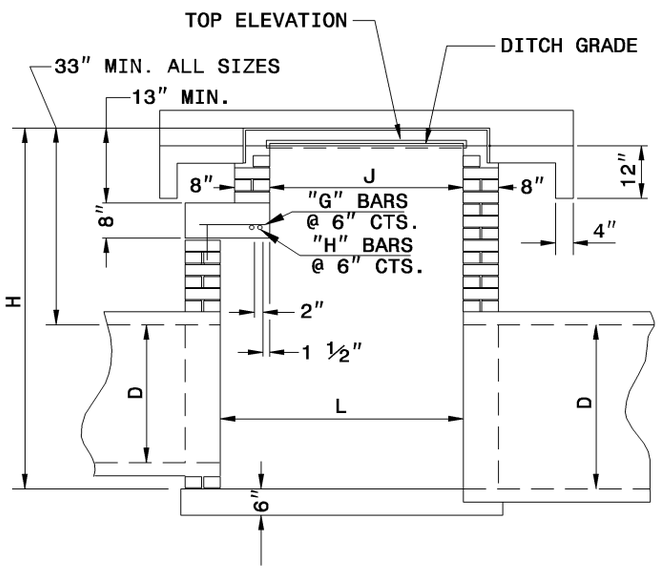

SECTION X-X

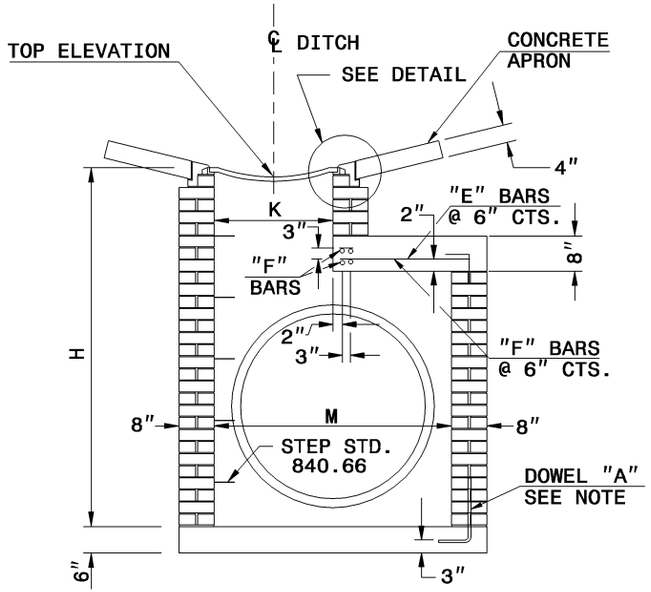

SECTION Y-Y

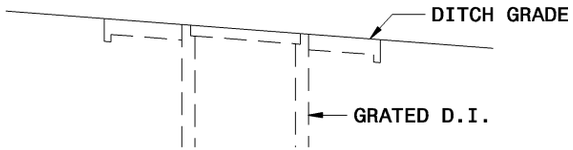

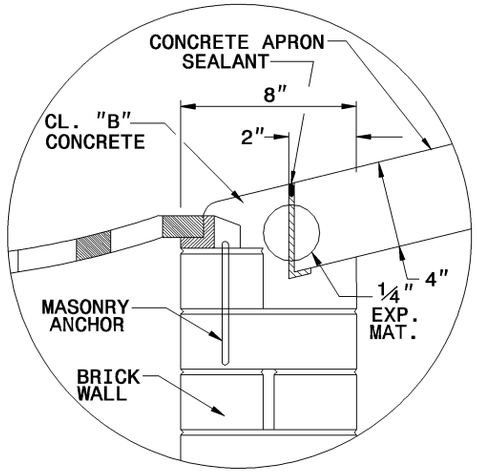

DETAIL

(APRON SUPPORT NOTCH)

STATE OF
NORTH CAROLINA
DEPT. OF TRANSPORTATION
DIVISION OF HIGHWAYS
RALEIGH, N.C.

7-06

ENGLISH STANDARD DRAWING FOR

BRICK GRATED DROP INLET TYPE 'A'

12" THRU 72" PIPE

SHEET 1 OF 2

840.26

SHEET 1 OF 2

840.26