STATE OF
NORTH CAROLINA
DEPT. OF TRANSPORTATION
DIVISION OF HIGHWAYS
RALEIGH, N.C.

7-06

ENGLISH STANDARD DRAWING FOR

TRAFFIC BEARING GRATED DROP INLET

FOR CAST IRON DOUBLE FRAME AND GRATES

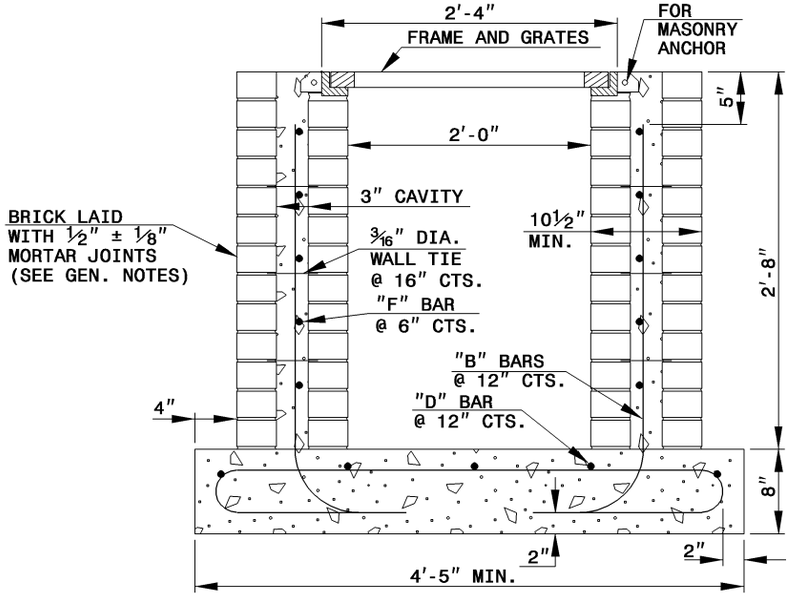

SECTION X-X

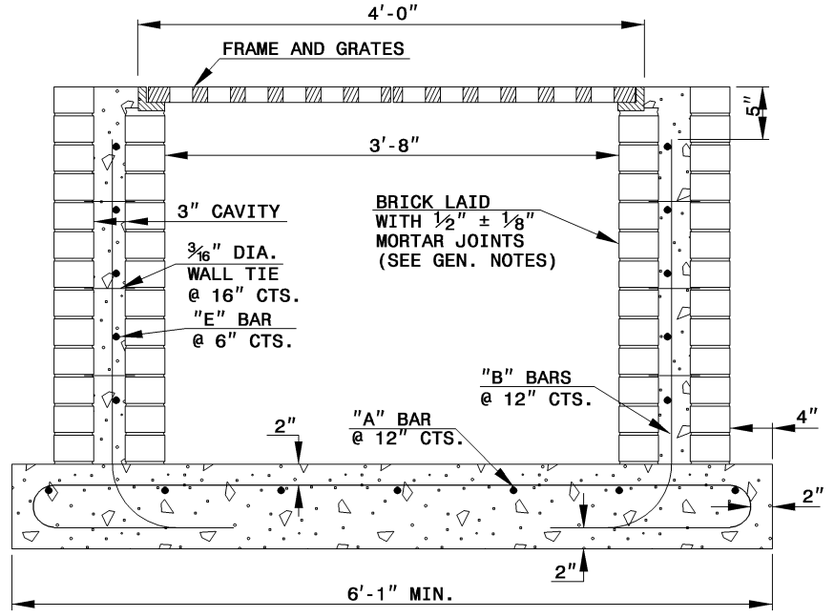

SECTION Y-Y

BRICK ALT.

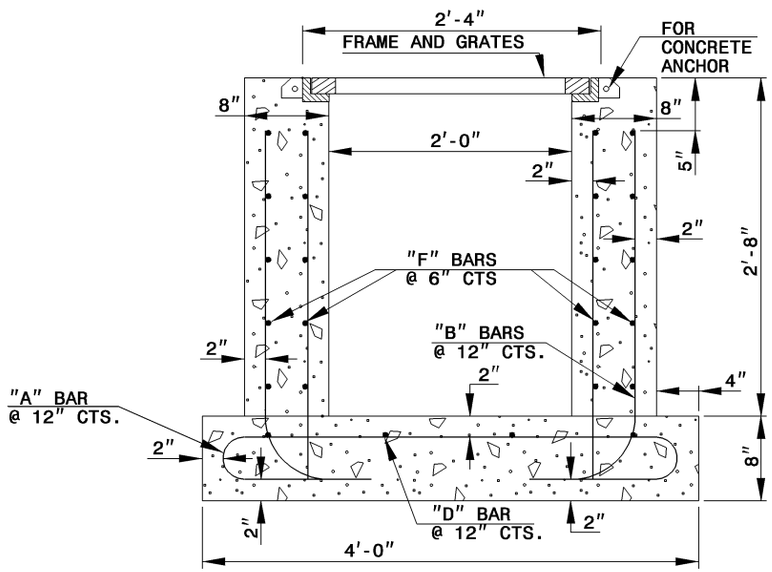

MAX. PIPE DIAMETER IS 18" R.C.P.

SECTION X-X

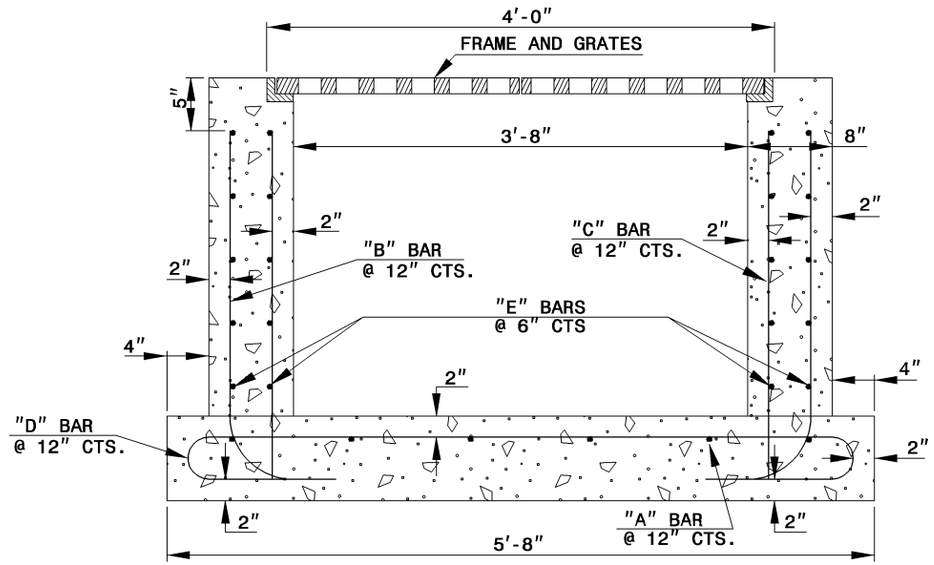

MAX. PIPE DIAMETER IS 36" R.C.P.

SECTION Y-Y

CONCRETE ALT.

NOTES:
- HORIZONTAL AND VERTICAL DIMENSIONS MAY BE ADJUSTED AS THE FIELD CONDITIONS AND/OR ALTERNATE DESIGN REQUIRE.
- MAXIMUM HEIGHT FOR THIS STRUCTURE IS 14'-0".
- MAKE ALL ADJUSTMENTS AS DIRECTED BY THE ENGINEER.
- DEPTH OF STEEL GRATE WILL REQIURE DEEPER SEAT ALONG SHORT WALLS.

STATE OF
NORTH CAROLINA
DEPT. OF TRANSPORTATION
DIVISION OF HIGHWAYS
RALEIGH, N.C.

7-06

ENGLISH STANDARD DRAWING FOR

TRAFFIC BEARING GRATED DROP INLET

FOR CAST IRON DOUBLE FRAME AND GRATES

SHEET 1 OF 2
840.35