STATE OF
NORTH CAROLINA
DEPT. OF TRANSPORTATION
DIVISION OF HIGHWAYS
RALEIGH, N.C.

7-06

ENGLISH STANDARD DRAWING FOR

DOUBLE FACED CONCRETE BARRIER

TYPE T, T1 AND T2

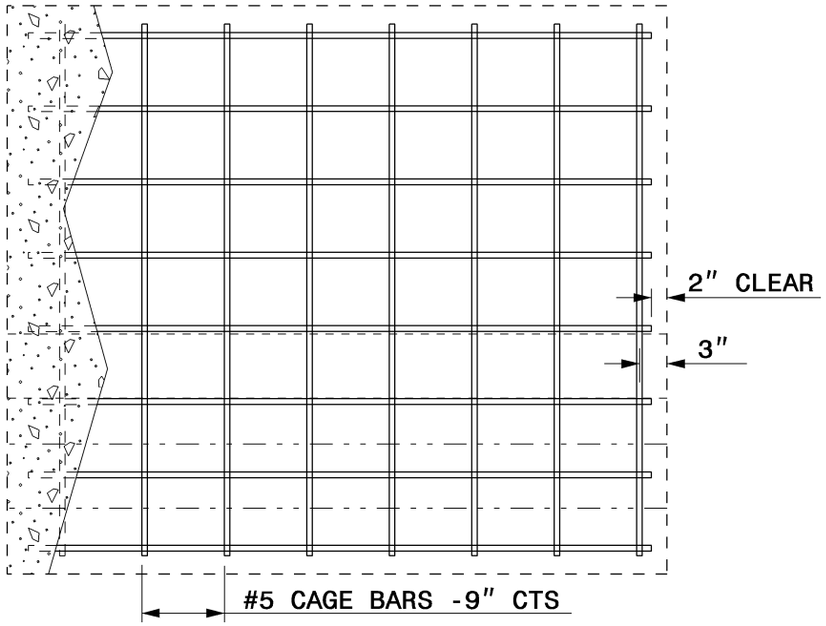

ELEVATION VIEW

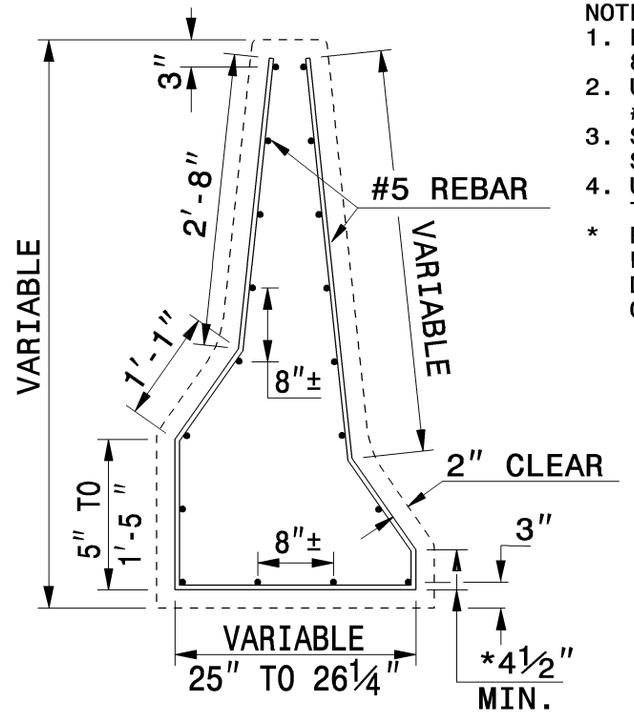

SECTION VIEW

TYPE T-1

NOTES:
1. EVENLY SPACE HORIZONTAL REBAR 8"±1" UNLESS OTHERWISE NOTED.
2. USE #5 BAR FORHORIZONTAL STEEL AND #5 BAR FOR VERTICAL CAGE.
3. SUBMIT CHANGES IN STEEL PLACEMENT OR SIZE TO THE ENGINEER.
4. USE SPLICE LENGTHS EQUAL TO 20 TIMES THE DIAMETER OF THE BAR.

* REFER TO PLAN TYPICAL SECTIONS AND PAVEMENT SCHEDULE TO DETERMINE KEY-IN DEPTH. DIMENSIONS SHOWN ARE BASED ON A MIN. KEY-IN DEPTH.

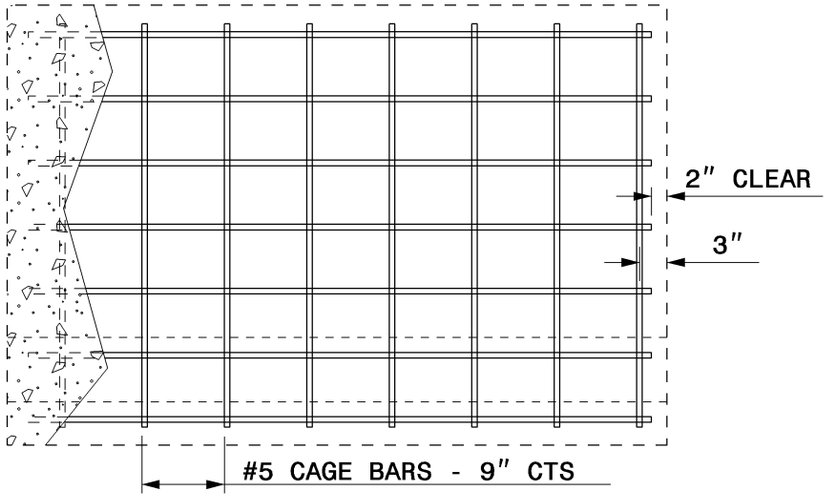

ELEVATION VIEW

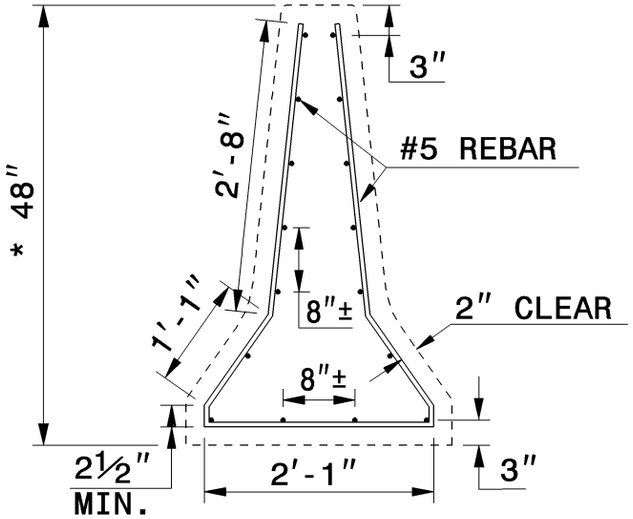

SECTION VIEW

TYPE T

STEEL PLACEMENT FOR CAST-IN-PLACE OR SLIP-FORM CONCRETE BARRIER

SHEET 3 OF 4

854.02

STATE OF
NORTH CAROLINA
DEPT. OF TRANSPORTATION
DIVISION OF HIGHWAYS
RALEIGH, N.C.

7-06

ENGLISH STANDARD DRAWING FOR

DOUBLE FACED CONCRETE BARRIER

TYPE T, T1 AND T2

SHEET 3 OF 4

854.02