STATE OF NORTH CAROLINA
DEPT. OF TRANSPORTATION
DIVISION OF HIGHWAYS
RALEIGH, N.C.

7-06

ENGLISH STANDARD DRAWING FOR
CABLE GUIDERAIL
MEDIAN HAZARD GUIDERAIL LAYOUT

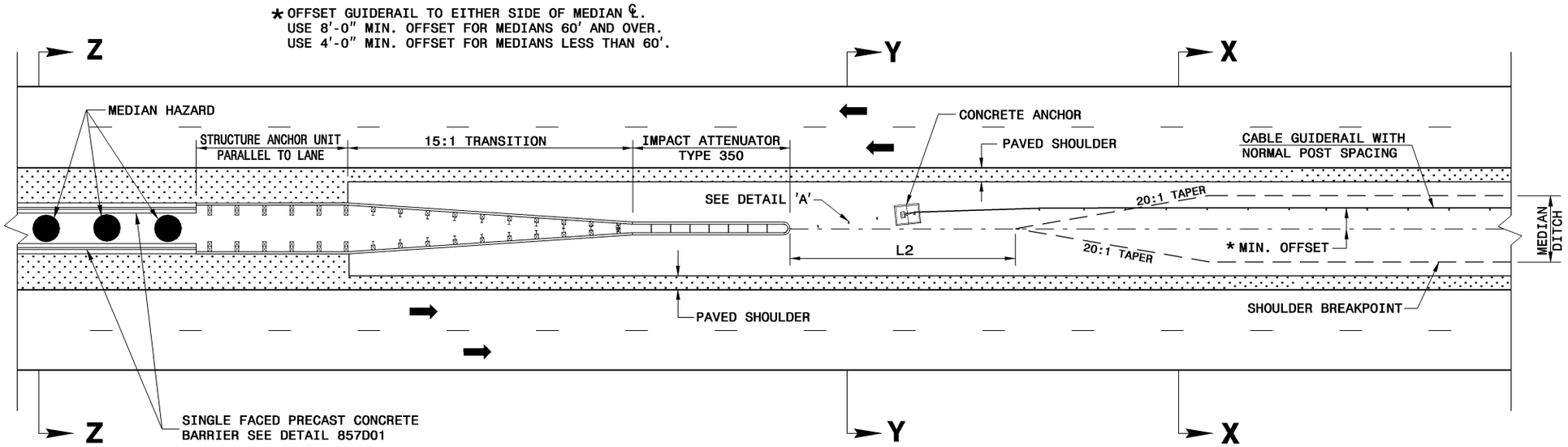

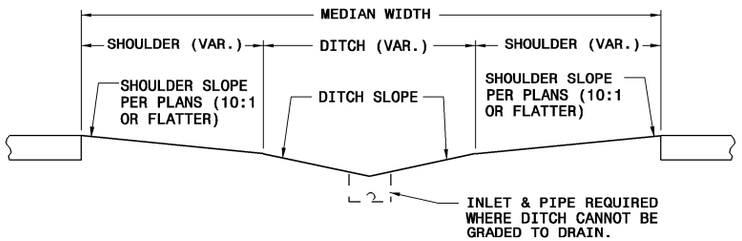

SECT. XX

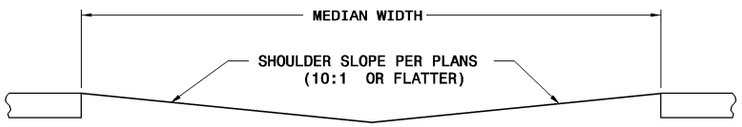

SECT. YY

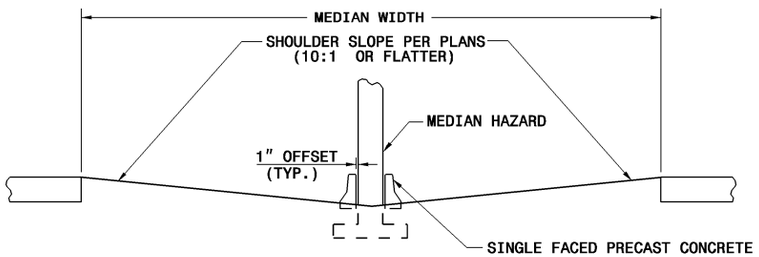

SECT. ZZ

LIMITS OF -L2-	
MEDIAN WIDTH	-L2- DIMENSION
30'	80.0'
36'	60.0'
40' & ABOVE	40.0'

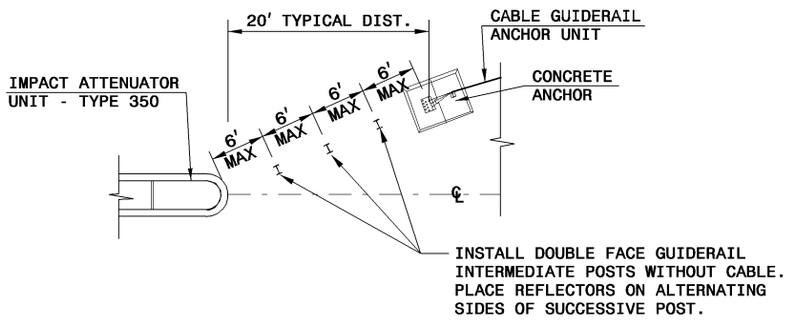

NOTE: POSTS WILL ONLY BE PLACED IN ONE OF THE TWO OPENINGS AT EACH MEDIAN HAZARD UNLESS OTHERWISE DIRECTED BY THE ENGINEER.

DETAIL 'A'

DETAIL OF TREATMENT AT MEDIAN HAZARDS

STATE OF NORTH CAROLINA
DEPT. OF TRANSPORTATION
DIVISION OF HIGHWAYS
RALEIGH, N.C.

7-06

ENGLISH STANDARD DRAWING FOR
CABLE GUIDERAIL
MEDIAN HAZARD GUIDERAIL LAYOUT

SHEET 1 OF 12
865.01