STATE OF
NORTH CAROLINA
DEPT. OF TRANSPORTATION
DIVISION OF HIGHWAYS
RALEIGH, N.C.

7-06

ENGLISH STANDARD DRAWING FOR

MEDIAN BARRIER SIGN SUPPORT AND ANCHORAGE

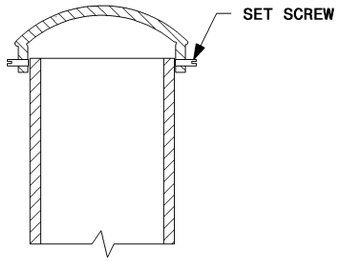

DETAIL "A"

FURNISH ALL TUBE OR PIPE SUPPORTS WITH A CAP. USE EITHER GALVANIZED STEEL OR A CAST ALUMINUM CAP TO MATCH THE MATERIAL OF THE POLE. USE FOUR SET SCREWS FOR ATTACHMENT TO SUPPORT.

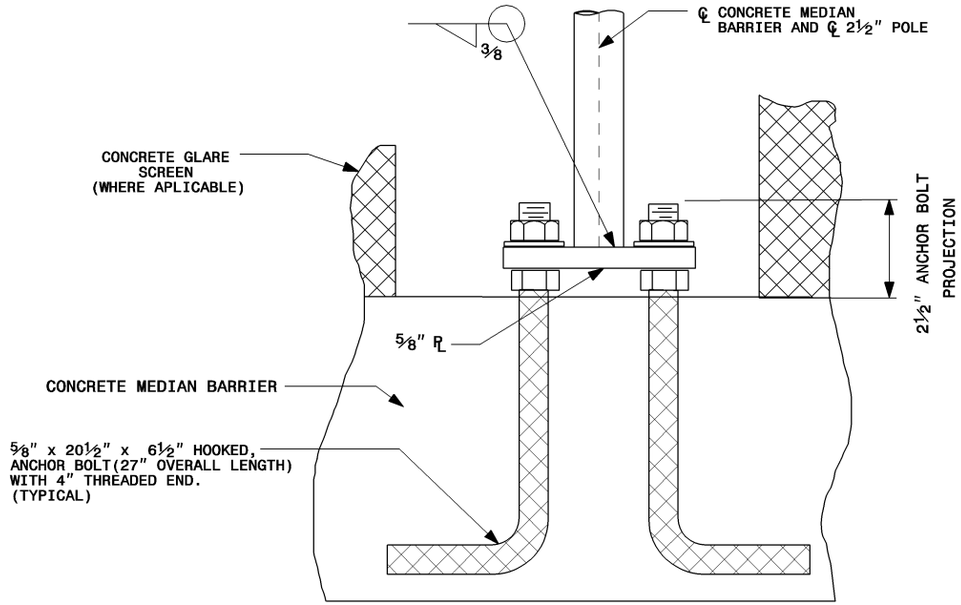

DETAIL "B"
WITH ANCHOR BOLT DETAIL

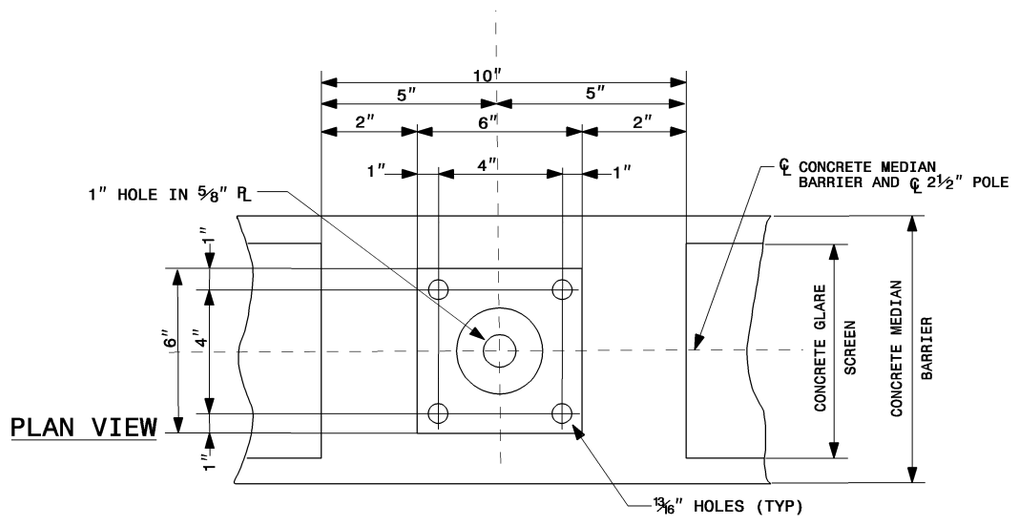

PLAN VIEW

SHEET 2 OF 2

903.40

STATE OF
NORTH CAROLINA
DEPT. OF TRANSPORTATION
DIVISION OF HIGHWAYS
RALEIGH, N.C.

7-06

ENGLISH STANDARD DRAWING FOR

MEDIAN BARRIER SIGN SUPPORT AND ANCHORAGE

SHEET 2 OF 2

903.40