PROJECT REFERENCE NO.	SHEET NO.
	Sig.

STATE OF NORTH CAROLINA
DEPT. OF TRANSPORTATION
DIVISION OF HIGHWAYS
RALEIGH, N.C.

11-08

ENGLISH DETAIL DRAWING FOR
INDUCTIVE DETECTION LOOPS

CONVENTIONAL 4-SIDED LOOP

SAW SLOT DEPTH CHART

DEPTH (IN)	NO. OF WIRE TURNS				
	2	3	4	5	6
CONCRETE	2.0	2.0	2.5	2.5	3.0
ASPHALT	2.0	2.5	3.0	3.0	3.0

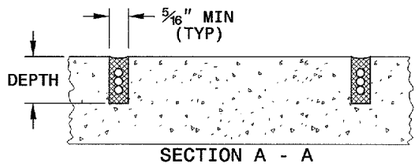

SECTION A - A

SAW CUT OPTIONS

OPTION 1

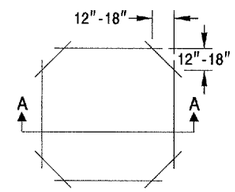

OPTION 2
(POOR PAVEMENT)

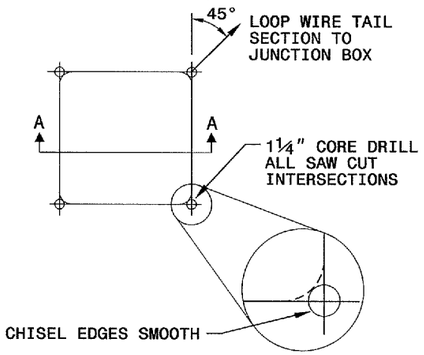

LOOP WINDING METHOD

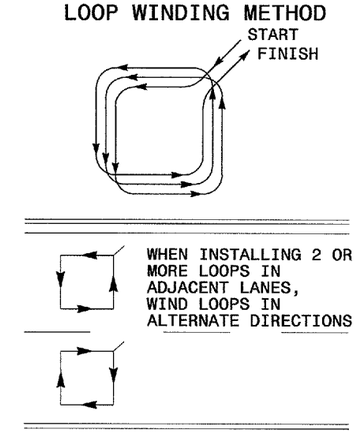

LOOP WIRE TWISTING METHOD

INCORRECT WAY TO TWIST WIRE

CORRECT WAY TO TWIST WIRE

NOTES

1. OVERLAP SAW CUTS AT CORNERS AND INTERSECTION POINTS TO ENSURE UNIFORM SAW SLOT DEPTH.
2. MAINTAIN 12" SPACING BETWEEN LOOP WIRE TAIL SECTIONS.
3. WIRE LOOPS CONNECTED TO THE SAME DETECTOR CHANNEL IN SERIES.
4. LOCATE LOOPS IN CENTER OF LANES UNLESS OTHERWISE SHOWN ON PLANS OR APPROVED BY ENGINEER.

QUADRUPOLE LOOP

SAW CUT OPTIONS

OPTION 1

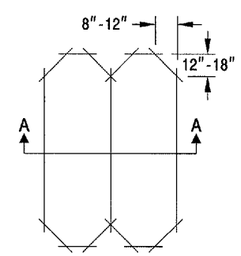

OPTION 2
(POOR PAVEMENT)

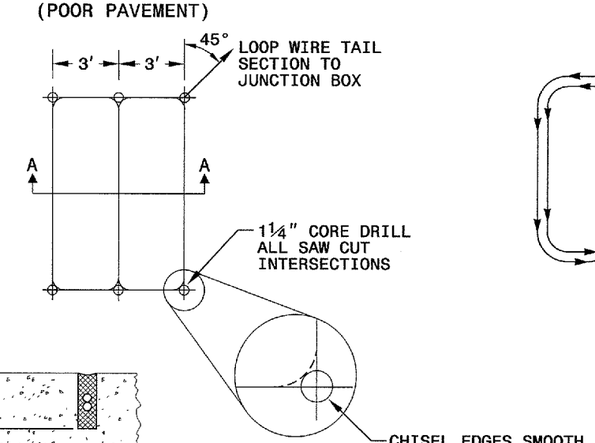

LOOP WINDING METHOD

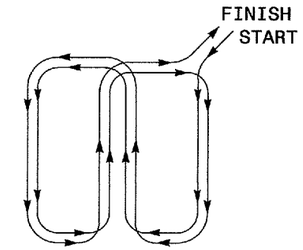

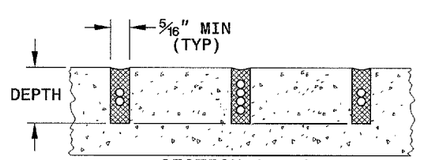

SECTION A - A

DEPTH IS 2.5" FOR CONCRETE AND 3.0" FOR ASPHALT

SHEET 1 OF 3
1725D01

STATE OF NORTH CAROLINA
DEPT. OF TRANSPORTATION
DIVISION OF HIGHWAYS
RALEIGH, N.C.

11-08

ENGLISH DETAIL DRAWING FOR
INDUCTIVE DETECTION LOOPS

SHEET 1 OF 3
1725D01

See Plate for Title

Prepared in the Offices of:
Intelligent Transportation Systems & Signals Unit
750 N. Greenfield Parkway
Garner, NC 27529

SEAL
NORTH CAROLINA PROFESSIONAL SEAL 16286 ENGINEER WILTON J. DEAN

SIGNATURE — DATE 11/24/08

24-NOV-2008 09:28
d:\work files\80-standard plate sheets\1725D01_ang2307.dgn
zbl1111e

PROJECT REFERENCE NO.	SHEET NO.
	Sig.

STATE OF
NORTH CAROLINA
DEPT. OF TRANSPORTATION
DIVISION OF HIGHWAYS
RALEIGH, N.C.

11-08

ENGLISH DETAIL DRAWING FOR
INDUCTIVE DETECTION LOOPS
LOOP WIRE DETAILS

SHEET 2 OF 3
1725D01

LOOP WIRE SPLICE POINT DETAILS

LOOP WIRE AT JUNCTION BOX

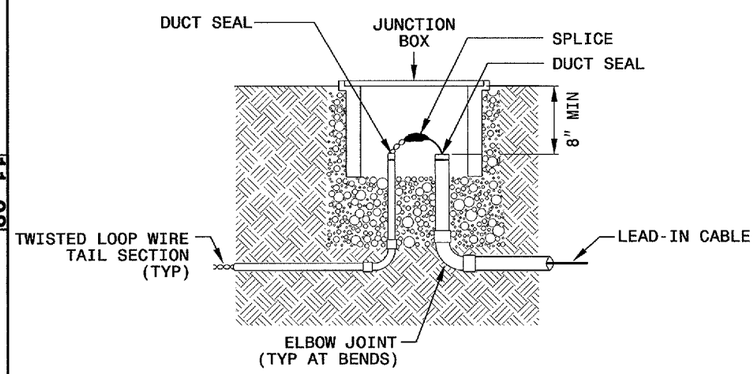

LOOP WIRE AT POLE

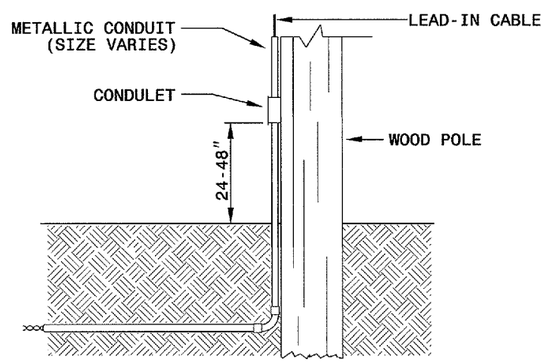

NOTE

SPLICE ALL LOOP WIRE TAIL SECTIONS/LEAD-IN CABLE IN JUNCTION BOXES OR APPROVED CONDULETS.

LOOP WIRE PAVEMENT EDGE DETAILS

LOOP WIRE AT CURB & GUTTER SECTION

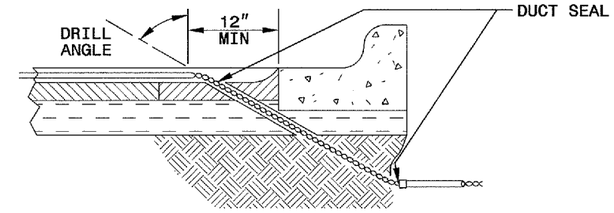

LOOP WIRE AT PAVEMENT SECTION

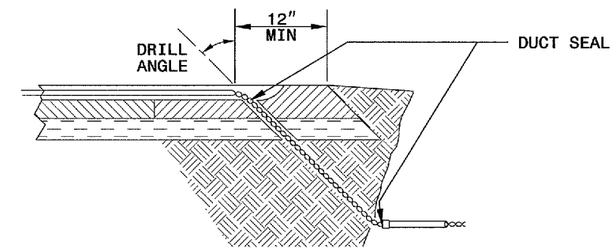

NOTES

1. DO NOT EXCAVATE UNDER CURB AND GUTTER SECTIONS FOR CONDUIT INSTALLATION.
2. TWIST LOOP WIRE TAIL SECTIONS FROM WHERE LOOP WIRE TAIL LEAVES SAW CUT TO JUNCTION BOX, INCLUDING THROUGH CONDUIT.
3. BEFORE SEALING LOOPS, INSTALL DUCT SEAL WHERE LOOP WIRE TAIL SECTION LEAVES SAW CUT IN PAVEMENT AND AT ENTRANCE OF CONDUIT TO JUNCTION BOX.

STATE OF
NORTH CAROLINA
DEPT. OF TRANSPORTATION
DIVISION OF HIGHWAYS
RALEIGH, N.C.

11-08

ENGLISH DETAIL DRAWING FOR
INDUCTIVE DETECTION LOOPS
LOOP WIRE DETAILS

SHEET 2 OF 3
1725D01

See Plate for Title

Prepared in the Offices of:
Intelligent Transportation Systems & Signals Unit
750 N. Greenfield Parkway
Garner, NC 27529

SEAL
NORTH CAROLINA PROFESSIONAL SEAL 16286 ENGINEER WILTON T. DEAN

Wilton T. Dean 11/24/08
SIGNATURE DATE

24-NOV-2008 09:29
G:\work files\8890-standard plate sheets\1725D02_dwg2307.dgn
zmiller

PROJECT REFERENCE NO.	SHEET NO.
	Sig.

STATE OF NORTH CAROLINA
DEPT. OF TRANSPORTATION
DIVISION OF HIGHWAYS
RALEIGH, N.C.

11-08

ENGLISH DETAIL DRAWING FOR
INDUCTIVE DETECTION LOOPS
SPLICING FOR LEAD-IN CABLE AND LOOP WIRE

SHEET 3 OF 3

1725D01

STEP 1. STRIP LOOP WIRE AND LEAD-IN CABLE

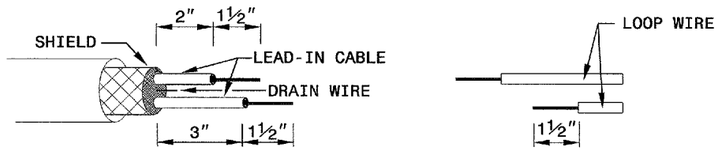

STEP 2. CONNECT AND SOLDER

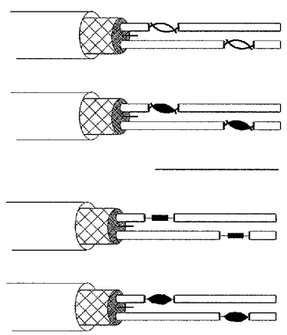

TWIST BARE CONDUCTORS TOGETHER AND SOLDER WITH RESIN CORE SOLDER

OR

CRIMP BARE CONDUCTORS TOGETHER WITH AN UNINSULATED BUTT CONNECTOR AND SOLDER WITH RESIN CORE SOLDER

BOND SHIELD DRAIN WIRE AT SPLICE SECTIONS (DO NOT GROUND)

LOOP WIRE AND LEAD-IN CABLE CONNECTION DETAILS

SINGLE CONNECTION SERIES CONNECTION

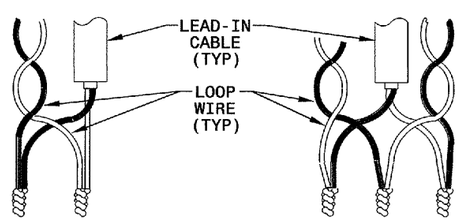

STEP 3. INSULATE EACH SOLDER JOINT SEPARATELY

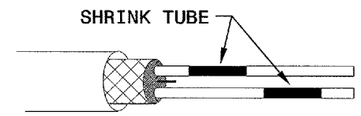

STEP 4. ENVIRONMENTALLY PROTECT SPLICE

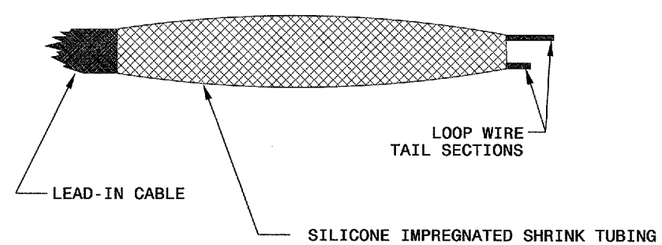

STATE OF NORTH CAROLINA
DEPT. OF TRANSPORTATION
DIVISION OF HIGHWAYS
RALEIGH, N.C.

11-08

ENGLISH DETAIL DRAWING FOR
INDUCTIVE DETECTION LOOPS
SPLICING FOR LEAD-IN CABLE AND LOOP WIRE

SHEET 3 OF 3

1725D01

See Plate for Title

Prepared in the Offices of:

Intelligent Transportation Systems & Signals Unit
Research Office of North Carolina Department of Transportation

750 N. Greenfield Parkway
Garner, NC 27529

SEAL

NORTH CAROLINA PROFESSIONAL SEAL 16286 ENGINEER MILTON L. DEAN

Milton L. Dean 11/24/08
SIGNATURE DATE

24-NOV-2008 09:36
d:\work\files\MD-standard plate sheets\1725\103_nov2307.dgn
mdean16