PROJECT REFERENCE NO.	SHEET NO.
	Sig. M 3

Fabrication Details – Strain Poles

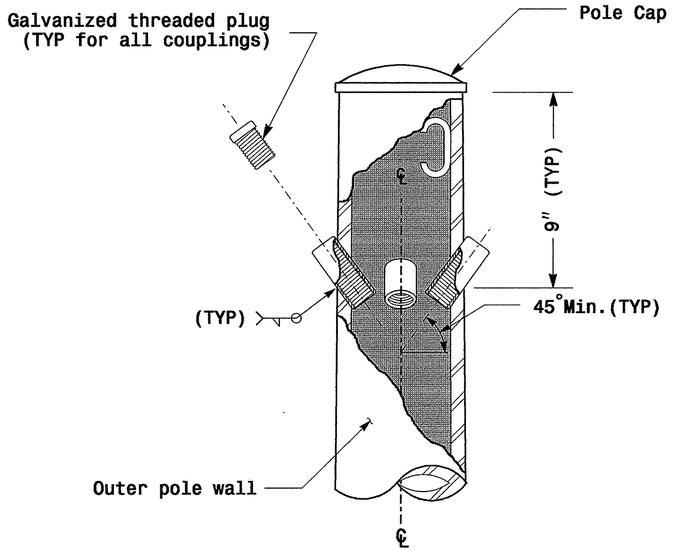

Cable Entrances at Top of Pole

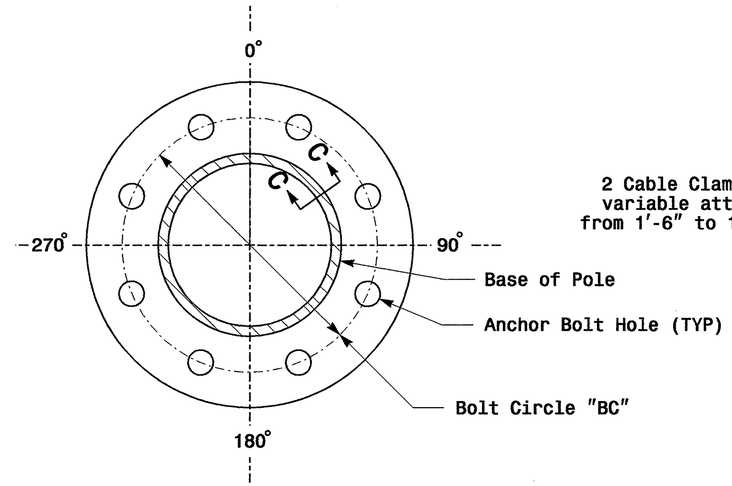

Section B-B

(See drawing M2)

Pole Base Plate

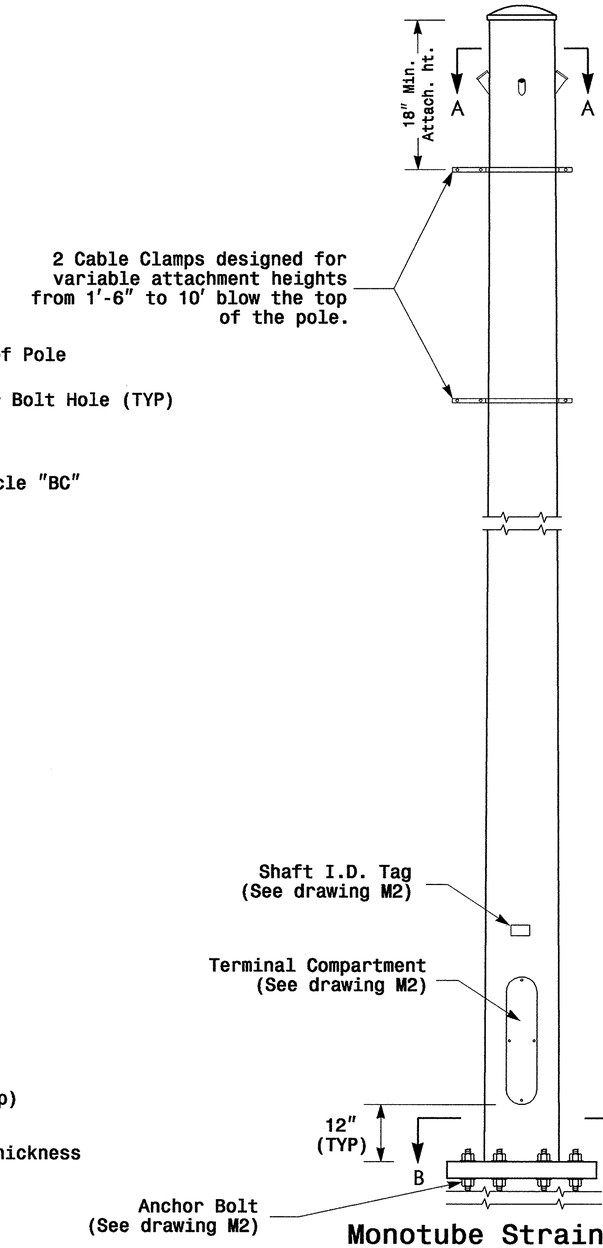

Monotube Strain Pole
(.14"/Foot Taper)

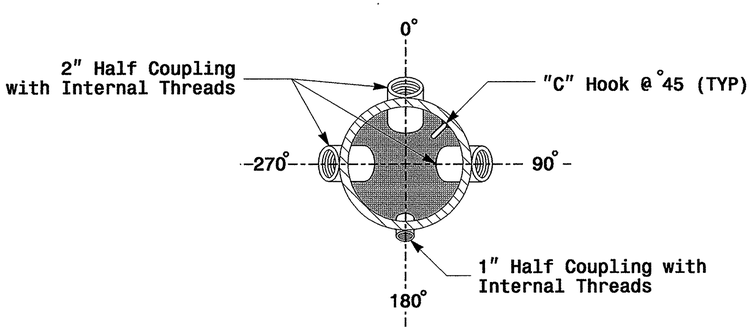

Section A-A

Radial Orientation for Factory Installed Accessories at Top of Pole

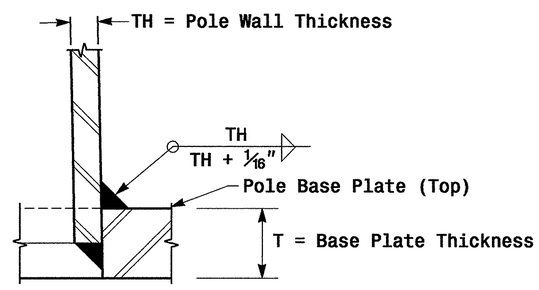

Section C-C

Socket Connection Weld Detail

Prepared in the Offices of:
Traffic Engineering and Safety Systems Branch
STATE OF NORTH CAROLINA
DEPARTMENT OF TRANSPORTATION
Signals and Geometrics Section
122 N. McDowell St., Raleigh, NC 27603

SCALE
0 NA
NONE

Typical Fabrication Details
For Strain Poles

PLAN DATE:	May 2005	REVIEWED BY:	C.F. Andrews
PREPARED BY:	P.L. Alexander	REVIEWED BY:	A.M. Esposito

REVISIONS	INIT.	DATE

SEAL
NORTH CAROLINA PROFESSIONAL SEAL 028094 ENGINEER DEBESH C. SARKAR

D. Sarkar 9.2.2005
SIGNATURE DATE

SIG. INVENTORY NO.

01-SEP-2005 14:07
w:\peoples-unit\workgroups\2004 metal pole standards\2004 m3.dgn
polexander