Morton & Morton
Design Services, PLLC

Count Number: 10-08002
County: Dare
City: Kill Devil Hills
Division: 01

Morton & Morton
Design Sevices, PLLC
Traffic Engineering

12-Hour Count Volume: 36,843 vehicles

Intersection: US 158 (North Croatan Highway) at Third Street

Count Date	Count Time	Weather Conditions
Saturday, May 29, 2010	6:00 A.M. to 7:00 P.M.	Morning-Mostly Cloudy, Afternoon-Partly Cloudy Evening-Partly Cloudy

Comments

1 School was not in session
2 Pedestrian movements are tabulated under the approach that they cross
3 Counted by: Donald Morton
Kyle Thompson
4 Data Processor: Donald Morton
5 Break Times: 2:30 to 3:00 P.M.
6 Interpolated values for these intervals
7 Scheduled Break: 9:00 to 10:00 A.M.
8 Signalized intersection left turn treatments

Southbound	Protected/Permitted
Westbound	Permitted
Northbound	Protected/Permitted
Eastbound	Permitted

9 Traffic Signal Inventory No.: 01-0333

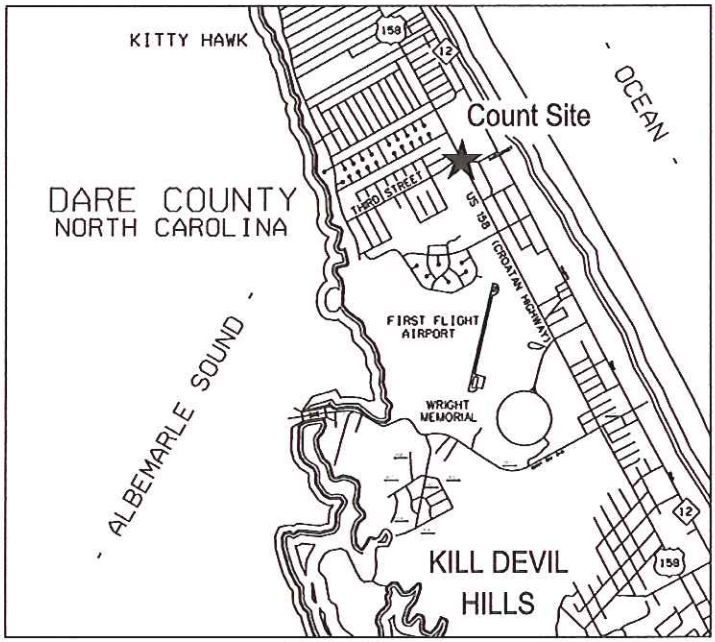

Vicinity Map

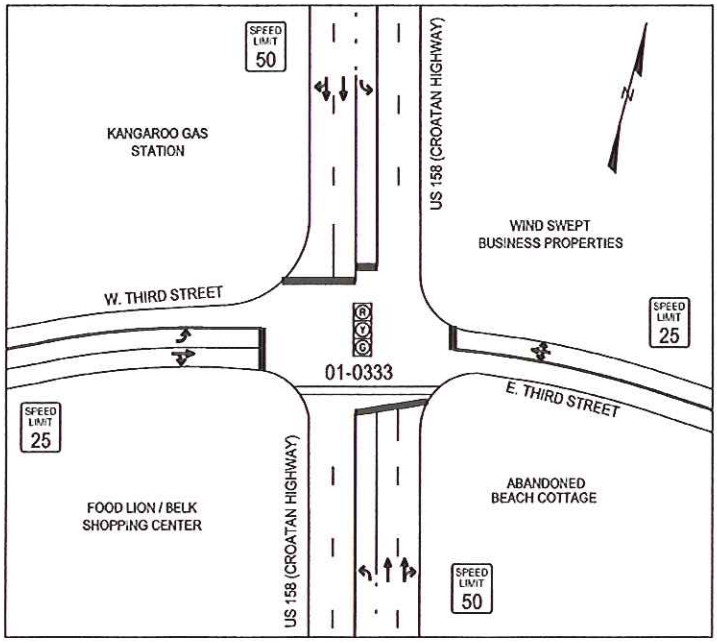

Intersection Sketch

9121 Anson Way, Suite 101 Raleigh, NC 27615 Phone 919-882-6066 Fax 919-256-7609

Morton & Morton
Design Services, PLLC

Count Number 10-08002
County Dare
City Kill Devil Hills
Division 01

Intersection US 158 (South Croatan Hwy) at Third Street

US 158 Northbound – Looking North toward Third Street

US 158 Northbound – Looking South away from Third Street

Morton & Morton
Design Services, PLLC

Count Number 10-08002
County Dare
City Kill Devil Hills
Division 01

Intersection US 158 (South Croatan Hwy) at Third Street

US 158 Southbound – Looking South toward Third Street

US 158 Southbound – Looking North away from Third Street

Morton & Morton
Design Services, PLLC

Count Number 10-08002
County Dare
City Kill Devil Hills
Division 01

Intersection US 158 (South Croatan Hwy) at Third Street

Third Street Eastbound – Looking East toward US 158

Third Street Eastbound – Looking West away from US 158

Morton & Morton
Design Services, PLLC

Count Number 10-08002
County Dare
City Kill Devil Hills
Division 01

Intersection US 158 (South Croatan Hwy) at Third Street

Third Street Westbound – Looking West toward US 158

Third Street Westbound – Looking East away from US 158

Morton & Morton Design Services, PLLC

9121 Anson Way, Suite 101
Raleigh, NC 27615
PH. (919)-882-6066

www.mortonmorton.com

File Name : 10-08002
Site Code : 00008002
Start Date : 5/29/2010
Page No : 1

Groups Printed- All Traffic

	US 158 (North Croatan Hwy) Southbound				E. Third Street Westbound				US 158 (North Croatan Hwy) Northbound				W. Third Street Eastbound						
Start Time	Left	Thru	Right	Peds	Left	Thru	Right	Peds	Left	Thru	Right	Peds	Left	Thru	Right	Peds	Exclu. Total	Inclu. Total	Int. Total
06:00 AM	2	45	2	0	1	3	0	0	4	58	0	1	3	3	3	0	1	124	125
06:15 AM	1	66	0	0	1	0	1	0	5	67	1	2	6	2	6	0	2	156	158
06:30 AM	0	86	1	0	0	1	3	0	9	85	2	6	11	2	9	0	6	209	215
06:45 AM	2	102	1	0	0	4	3	0	4	99	0	0	12	3	8	0	0	238	238
Total	5	299	4	0	2	8	7	0	22	309	3	9	32	10	26	0	9	727	736
07:00 AM	0	98	7	0	0	3	6	1	5	130	1	1	6	7	11	0	2	274	276
07:15 AM	1	128	8	0	2	2	1	0	6	188	5	2	8	1	13	0	2	363	365
07:30 AM	3	159	10	0	3	1	4	0	3	206	2	0	24	3	14	0	0	432	432
07:45 AM	2	195	10	0	2	3	2	0	3	195	3	11	15	5	17	0	11	452	463
Total	6	580	35	0	7	9	13	1	17	719	11	14	53	16	55	0	15	1521	1536
08:00 AM	5	194	19	1	3	4	6	0	7	265	2	2	22	2	16	0	3	545	548
08:15 AM	3	219	24	0	1	1	7	0	12	303	4	2	21	6	16	0	2	617	619
08:30 AM	5	254	23	0	5	6	11	0	7	273	3	1	17	7	22	0	1	633	634
08:45 AM	4	288	14	0	4	2	10	0	7	301	0	0	26	4	21	0	0	681	681
Total	17	955	80	1	13	13	34	0	33	1142	9	5	86	19	75	0	6	2476	2482
*** BREAK ***																			
10:00 AM	4	378	41	1	5	9	15	0	14	316	7	0	22	7	17	0	1	835	836
10:15 AM	14	336	35	1	16	8	4	0	17	371	9	4	29	7	21	5	10	867	877
10:30 AM	8	407	41	0	5	7	10	2	17	393	3	8	28	3	19	0	10	941	951
10:45 AM	19	454	39	0	7	11	12	0	35	329	3	6	38	16	17	0	6	980	986
Total	45	1575	156	2	33	35	41	2	83	1409	22	18	117	33	74	5	27	3623	3650
11:00 AM	6	447	47	0	11	9	7	0	23	360	4	6	33	10	34	0	6	991	997
11:15 AM	13	419	51	0	7	16	11	1	29	381	6	5	16	14	24	0	6	987	993
11:30 AM	10	425	28	0	16	6	11	2	21	349	4	4	46	17	22	0	6	955	961
11:45 AM	12	484	43	0	9	5	10	2	25	394	6	4	30	9	17	0	6	1044	1050
Total	41	1775	169	0	43	36	39	5	98	1484	20	19	125	50	97	0	24	3977	4001
12:00 PM	8	445	48	0	9	5	8	0	28	322	8	9	50	16	29	0	9	976	985
12:15 PM	13	419	52	2	10	12	10	0	19	319	6	3	35	13	23	1	6	931	937
12:30 PM	8	452	51	0	2	16	8	0	26	317	3	7	32	12	26	0	7	953	960
12:45 PM	11	453	36	0	4	9	6	0	22	295	5	5	42	19	33	0	5	935	940
Total	40	1769	187	2	25	42	32	0	95	1253	22	24	159	60	111	1	27	3795	3822
01:00 PM	8	395	32	0	9	9	12	0	20	273	4	2	48	14	30	3	5	854	859
01:15 PM	7	455	43	0	3	9	12	0	21	317	6	1	36	8	25	0	1	942	943
01:30 PM	9	394	28	0	9	6	7	0	25	324	3	2	31	17	23	0	2	876	878
01:45 PM	16	453	42	0	2	9	9	0	19	335	2	4	34	11	17	0	4	949	953
Total	40	1697	145	0	23	33	40	0	85	1249	15	9	149	50	95	3	12	3621	3633
02:00 PM	12	414	40	0	7	7	7	1	20	300	3	6	31	11	28	0	7	880	887
02:15 PM	11	396	38	0	7	10	6	0	21	294	2	3	27	14	15	0	3	841	844
02:30 PM	13	399	36	0	6	10	7	0	22	299	4	4	28	13	17	0	4	854	858
02:45 PM	15	402	34	0	6	11	7	0	23	306	6	4	28	11	19	0	4	868	872
Total	51	1611	148	0	26	38	27	1	86	1199	15	17	114	49	79	0	18	3443	3461

Morton & Morton Design Services, PLLC

9121 Anson Way, Suite 101
Raleigh, NC 27615
PH. (919)-882-6066

www.mortonmorton.com

File Name : 10-08002
Site Code : 00008002
Start Date : 5/29/2010
Page No : 2

Groups Printed- All Traffic

	US 158 (North Croatan Hwy) Southbound				E. Third Street Westbound				US 158 (North Croatan Hwy) Northbound				W. Third Street Eastbound						
Start Time	Left	Thru	Right	Peds	Left	Thru	Right	Peds	Left	Thru	Right	Peds	Left	Thru	Right	Peds	Exclu. Total	Inclu. Total	Int. Total
03:00 PM	17	405	32	0	5	11	8	0	24	313	8	5	29	10	21	0	5	883	888
03:15 PM	19	410	30	0	3	10	13	0	25	319	9	6	37	13	16	0	6	904	910
03:30 PM	10	475	27	0	8	12	5	3	28	300	6	11	32	9	22	0	14	934	948
03:45 PM	16	440	30	0	9	12	10	0	26	330	9	4	45	10	37	0	4	974	978
Total	62	1730	119	0	25	45	36	3	103	1262	32	26	143	42	96	0	29	3695	3724
04:00 PM	14	416	28	0	6	19	15	0	21	279	7	0	38	21	26	0	0	890	890
04:15 PM	17	477	27	0	2	12	12	0	27	337	9	6	28	13	22	0	6	983	989
04:30 PM	13	398	57	1	4	12	12	1	26	276	6	7	37	15	19	0	9	875	884
04:45 PM	7	414	35	0	6	11	8	0	24	301	3	2	44	17	26	0	2	896	898
Total	51	1705	147	1	18	54	47	1	98	1193	25	15	147	66	93	0	17	3644	3661
05:00 PM	10	383	41	0	3	12	8	1	24	300	4	6	26	6	12	0	7	829	836
05:15 PM	8	379	36	0	3	15	7	1	16	267	5	2	36	9	20	0	3	801	804
05:30 PM	16	402	38	0	7	21	11	4	12	262	5	9	18	6	20	0	13	818	831
05:45 PM	9	367	49	0	5	14	7	0	23	268	8	1	31	10	14	0	1	805	806
Total	43	1531	164	0	18	62	33	6	75	1097	22	18	111	31	66	0	24	3253	3277
06:00 PM	12	316	26	0	6	8	10	2	19	272	5	10	29	6	25	0	12	734	746
06:15 PM	5	409	31	0	9	5	5	0	25	285	5	1	32	9	22	0	1	842	843
06:30 PM	10	374	32	0	3	8	16	0	24	237	6	6	31	13	24	0	6	778	784
06:45 PM	7	321	31	0	8	9	4	0	19	260	4	5	29	10	12	0	5	714	719
Total	34	1420	120	0	26	30	35	2	87	1054	20	22	121	38	83	0	24	3068	3092
Grand Total	435	16647	1474	6	259	405	384	21	882	13370	216	196	1357	464	950	9	232	36843	37075
Apprch %	2.3	89.7	7.9		24.7	38.6	36.6		6.1	92.4	1.5		49	16.7	34.3				
Total %	1.2	45.2	4		0.7	1.1	1		2.4	36.3	0.6		3.7	1.3	2.6		0.6	99.4	

Morton & Morton Design Services, PLLC

9121 Anson Way, Suite 101
Raleigh, NC 27615
PH. (919)-882-6066

www.mortonmorton.com

File Name : 10-08002
Site Code : 00008002
Start Date : 5/29/2010
Page No : 3

Groups Printed- All Traffic

	US 158 (North Croatan Hwy) Southbound				E. Third Street Westbound				US 158 (North Croatan Hwy) Northbound				W. Third Street Eastbound						
	Left	Thru	Right	Peds	Left	Thru	Right	Peds	Left	Thru	Right	Peds	Left	Thru	Right	Peds	Exclu Total	Inclu Total	Int. Total

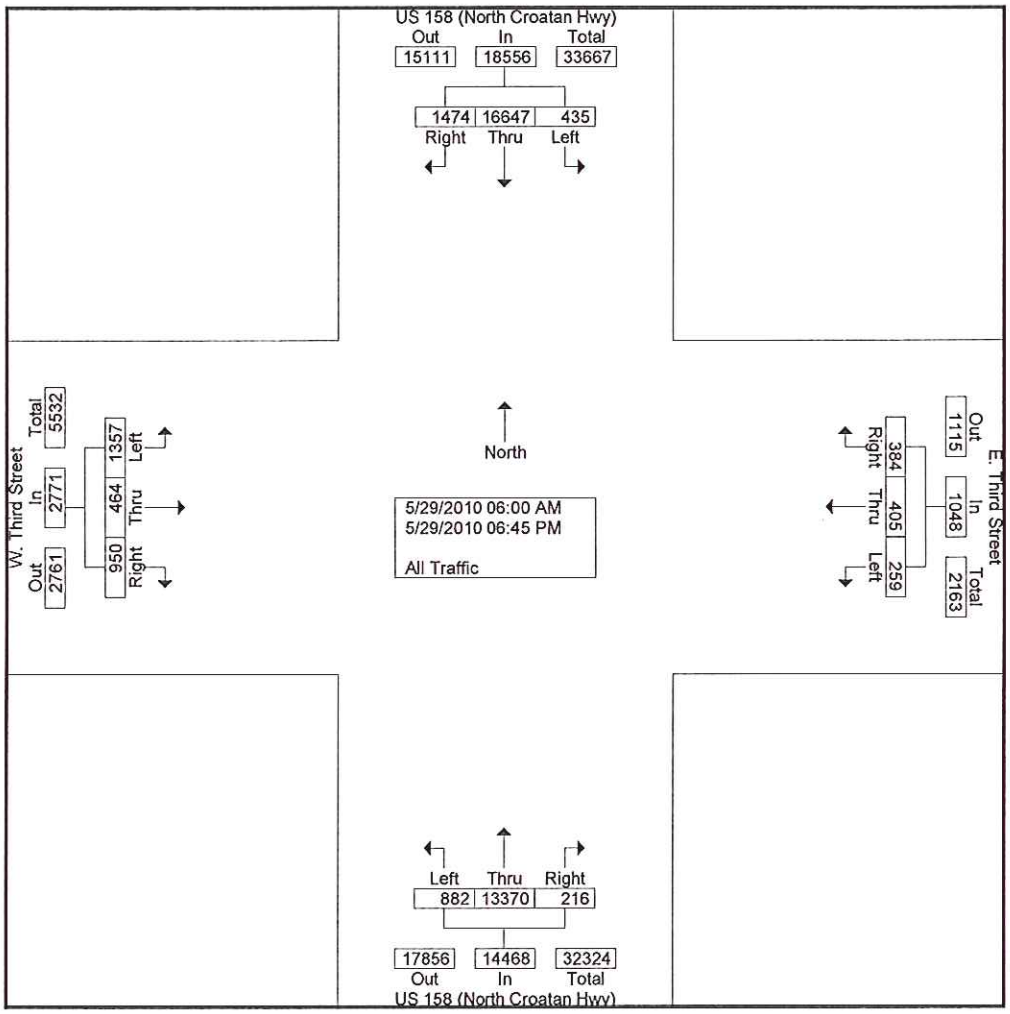

Morton & Morton Design Services, PLLC

9121 Anson Way, Suite 101
Raleigh, NC 27615
PH. (919)-882-6066

www.mortonmorton.com

File Name : 10-08002
Site Code : 00008002
Start Date : 5/29/2010
Page No : 4

	US 158 (North Croatan Hwy) Southbound				E. Third Street Westbound				US 158 (North Croatan Hwy) Northbound				W. Third Street Eastbound				
Start Time	Left	Thru	Right	App. Total	Left	Thru	Right	App. Total	Left	Thru	Right	App. Total	Left	Thru	Right	App. Total	Int. Total
Peak Hour Analysis From 06:00 AM to 11:45 AM - Peak 1 of 1																	
Peak Hour for Entire Intersection Begins at 11:00 AM																	
11:00 AM	6	447	47	500	11	9	7	27	23	360	4	387	33	10	**34**	77	991
11:15 AM	**13**	419	**51**	483	7	**16**	**11**	**34**	**29**	381	**6**	416	16	14	24	54	987
11:30 AM	10	425	28	463	**16**	6	11	33	21	349	4	374	**46**	**17**	22	**85**	955
11:45 AM	12	**484**	43	**539**	9	5	10	24	25	**394**	6	**425**	30	9	17	56	**1044**
Total Volume	41	1775	169	1985	43	36	39	118	98	1484	20	1602	125	50	97	272	3977
% App. Total	2.1	89.4	8.5		36.4	30.5	33.1		6.1	92.6	1.2		46	18.4	35.7		
PHF	.788	.917	.828	.921	.672	.563	.886	.868	.845	.942	.833	.942	.679	.735	.713	.800	.952

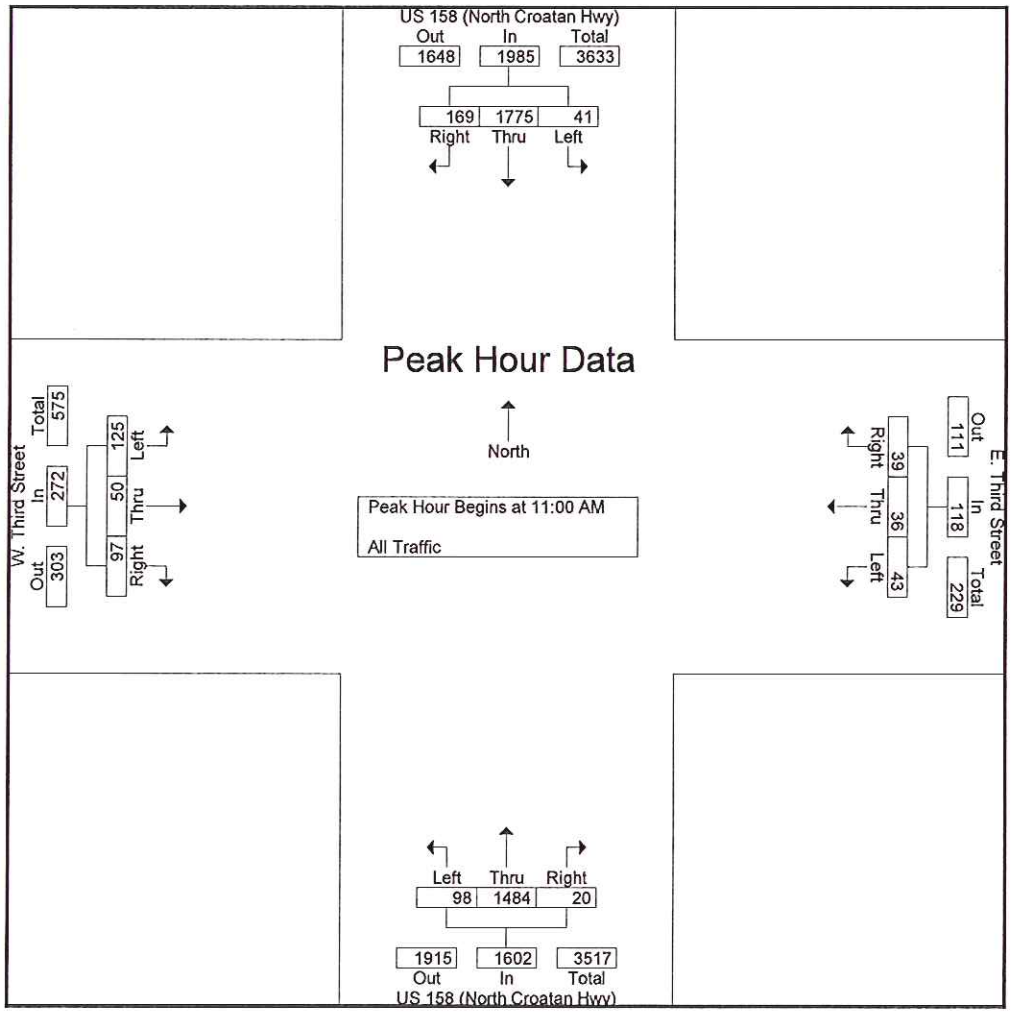

Morton & Morton Design Services, PLLC

9121 Anson Way, Suite 101
Raleigh, NC 27615
PH. (919)-882-6066

www.mortonmorton.com

File Name : 10-08002
Site Code : 00008002
Start Date : 5/29/2010
Page No : 5
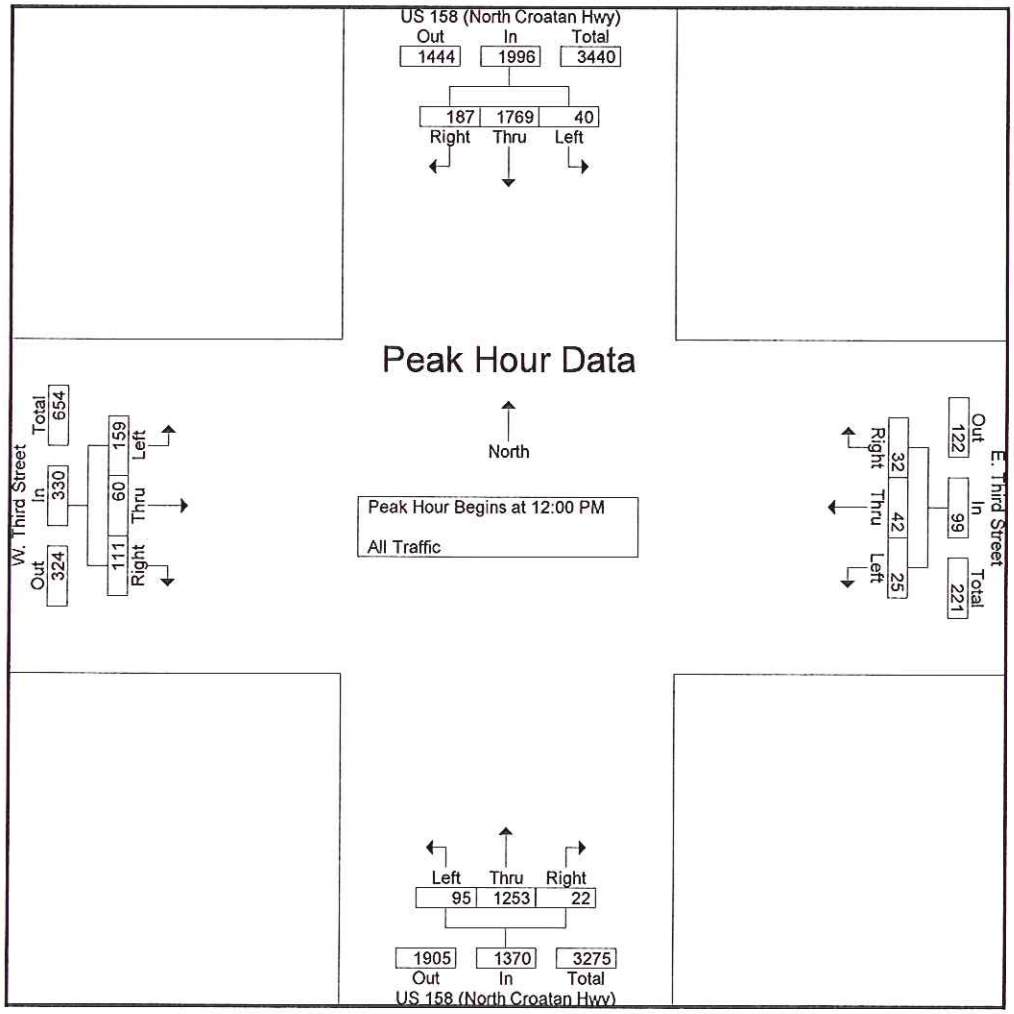
	US 158 (North Croatan Hwy) Southbound				E. Third Street Westbound				US 158 (North Croatan Hwy) Northbound				W. Third Street Eastbound				
Start Time	Left	Thru	Right	App. Total	Left	Thru	Right	App. Total	Left	Thru	Right	App. Total	Left	Thru	Right	App. Total	Int. Total
Peak Hour Analysis From 12:00 PM to 06:45 PM - Peak 1 of 1																	
Peak Hour for Entire Intersection Begins at 12:00 PM																	
12:00 PM	8	445	48	501	9	5	8	22	**28**	**322**	**8**	**358**	**50**	16	29	**95**	**976**
12:15 PM	**13**	419	**52**	484	**10**	12	**10**	**32**	19	319	6	344	35	13	23	71	931
12:30 PM	8	452	51	**511**	2	**16**	8	26	26	317	3	346	32	12	26	70	953
12:45 PM	11	**453**	36	500	4	9	6	19	22	295	5	322	42	**19**	**33**	94	935
Total Volume	40	1769	187	1996	25	42	32	99	95	1253	22	1370	159	60	111	330	3795
% App. Total	2	88.6	9.4		25.3	42.4	32.3		6.9	91.5	1.6		48.2	18.2	33.6		
PHF	.769	.976	.899	.977	.625	.656	.800	.773	.848	.973	.688	.957	.795	.789	.841	.868	.972