John Davenport Engineering, Inc.
545 N. Trade Street Suite 202,
Winston-Salem, NC 27101
Phone 336-744-1636
Fax 336-722-6788

Count: 08-5067

Intersection: US 321 Bus @ SR 1276 (Finger Mill Rd.) Lincoln County

Count times and weather conditions: 12-hr Count Volume: 9, 777 vehicles

Day 1: 09/29/2008 2:00 PM to 6 PM Weather: Clear
Day 2: 09/30/2008 6 AM to 2:00 PM Weather: Clear

Comments

1. School was in session.
2. Pedestrians are tabulated under the approach that they cross.
3. Counted by: Audray Russell
4. Data Processor: Lynn Reid
5. Break times: Breaks were taken at off peak Intervals and interpolated by an engineer
6. Stopped controlled intersection

Vicinity Map

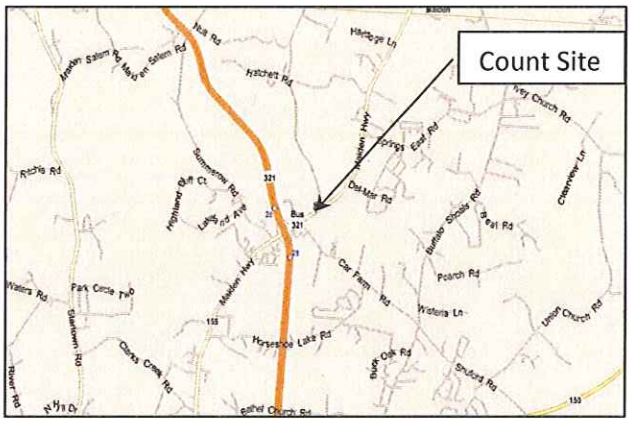

Intersection Sketch

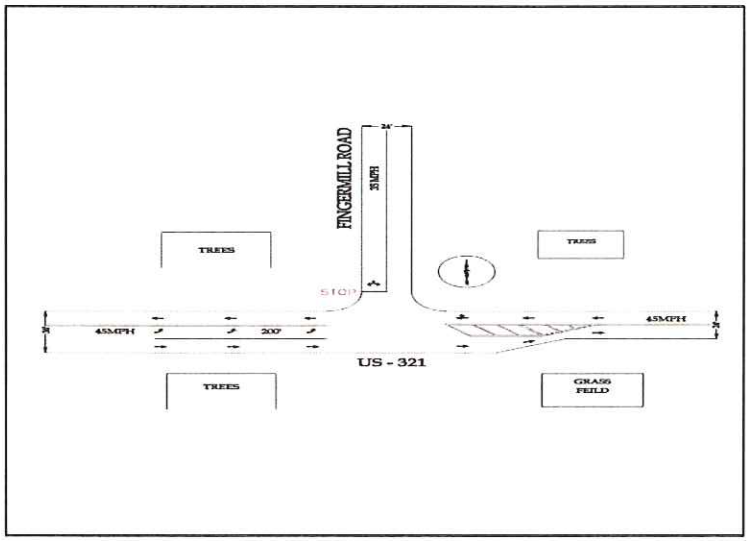

John Davenport Engineering Inc.

545 North Trade Street
Winston-Salem, NC 27101
Fax:(336)722-6788

Counted by: A. Russell

Weather: Clear

File Name : 08 5067
Site Code : 00000001
Start Date : 9/30/2008
Page No : 1

Groups Printed- All Vehicles

	Finger Mill Road Southbound					US 321 Westbound					t-intersection Northbound					US 321 Eastbound							
Start Time	Left	Thru	Right	Trks	App. Total	Left	Thru	Right	Trks	App. Total	Left	Thru	Right	Trks	App. Total	Left	Thru	Right	Trks	App. Total	Exclu. Total	Inclu. Total	Int. Total
06:00	0	0	59	5	59	0	89	0	3	89	0	0	0	0	0	57	66	0	9	123	17	271	288
06:15	0	0	26	3	26	0	47	3	1	50	0	0	0	0	0	100	34	0	3	134	7	210	217
06:30	0	0	33	3	33	0	49	4	1	53	0	0	0	0	0	103	37	0	3	140	7	226	233
06:45	0	0	31	4	31	0	42	0	1	42	0	0	0	0	0	100	49	0	6	149	11	222	233
Total	0	0	149	15	149	0	227	7	6	234	0	0	0	0	0	360	186	0	21	546	42	929	971
07:00	0	0	34	2	34	0	28	1	1	29	0	0	0	0	0	70	24	0	4	94	7	157	164
07:15	0	0	27	3	27	0	37	1	3	38	0	0	0	0	0	61	28	0	4	89	10	154	164
07:30	0	0	33	4	33	0	79	2	0	81	0	0	0	0	0	76	30	0	4	106	8	220	228
07:45	0	0	33	3	33	0	39	1	0	40	0	0	0	0	0	74	31	0	3	105	6	178	184
Total	0	0	127	12	127	0	183	5	4	188	0	0	0	0	0	281	113	0	15	394	31	709	740
08:00	0	0	28	5	28	0	34	1	0	35	0	0	0	0	0	61	34	0	7	95	12	158	170
08:15	0	0	29	3	29	0	50	0	3	50	0	0	0	0	0	53	52	0	8	105	14	184	198
08:30	0	0	33	4	33	0	46	2	1	48	0	0	0	0	0	55	51	0	9	106	14	187	201
08:45	2	0	34	1	36	0	61	1	2	62	0	0	0	0	0	62	57	0	4	119	7	217	224
Total	2	0	124	13	126	0	191	4	6	195	0	0	0	0	0	231	194	0	28	425	47	746	793
09:00	0	0	23	5	23	0	43	0	0	43	0	0	0	0	0	42	45	0	5	87	10	153	163
09:15	0	0	24	5	24	0	18	0	2	18	0	0	0	0	0	17	22	0	9	39	16	81	97
09:30	0	0	21	7	21	0	41	1	2	42	0	0	0	0	0	25	33	0	10	58	19	121	140
09:45	0	0	29	8	29	0	35	0	4	35	0	0	0	0	0	35	28	0	10	63	22	127	149
Total	0	0	97	25	97	0	137	1	8	138	0	0	0	0	0	119	128	0	34	247	67	482	549
10:00	0	0	18	8	18	0	30	3	0	33	0	0	0	0	0	10	23	0	11	33	19	84	103
10:15	0	0	21	4	21	0	51	0	0	51	0	0	0	0	0	29	39	0	6	68	10	140	150
10:30	0	0	27	7	27	0	41	0	2	41	0	0	0	0	0	27	36	0	10	63	19	131	150
10:45	0	0	21	10	21	0	28	2	3	30	0	0	0	0	0	22	30	0	8	52	21	103	124
Total	0	0	87	29	87	0	150	5	5	155	0	0	0	0	0	88	128	0	35	216	69	458	527
11:00	0	0	29	7	29	0	18	0	0	18	0	0	0	0	0	28	31	0	9	59	16	106	122
11:15	0	0	38	6	38	0	40	1	2	41	0	0	0	0	0	24	34	0	10	58	18	137	155
11:30	2	0	44	9	46	0	36	0	0	36	0	0	0	0	0	36	33	0	8	69	17	151	168
11:45	0	0	42	5	42	0	36	0	3	36	0	0	0	0	0	38	42	0	9	80	17	158	175
Total	2	0	153	27	155	0	130	1	5	131	0	0	0	0	0	126	140	0	36	266	68	552	620
12:00	0	0	46	7	46	0	41	1	1	42	0	0	0	0	0	34	43	0	8	77	16	165	181
12:15	1	0	51	8	52	0	43	2	1	45	0	0	0	0	0	47	51	0	11	98	20	195	215
12:30	0	0	27	11	27	0	35	2	2	37	0	0	0	0	0	46	43	0	12	89	25	153	178
12:45	0	0	43	6	43	0	51	0	1	51	0	0	0	0	0	48	45	0	10	93	17	187	204
Total	1	0	167	32	168	0	170	5	5	175	0	0	0	0	0	175	182	0	41	357	78	700	778
13:00	0	0	48	7	48	0	49	0	4	49	0	0	0	0	0	47	55	0	7	102	18	199	217
13:15	1	0	43	7	44	0	21	1	2	22	0	0	0	0	0	33	48	0	9	81	18	147	165
13:30	2	0	44	5	46	0	48	0	0	48	0	0	0	0	0	56	52	0	8	108	13	202	215
13:45	1	0	42	5	43	0	41	0	4	41	0	0	0	0	0	51	43	0	8	94	17	178	195
Total	4	0	177	24	181	0	159	1	10	160	0	0	0	0	0	187	198	0	32	385	66	726	792
14:00	0	0	30	6	30	0	33	0	1	33	0	0	0	0	0	35	33	0	11	68	18	131	149
14:15	0	0	32	6	32	0	48	1	5	49	0	0	0	0	0	41	34	0	6	75	17	156	173
14:30	0	0	57	2	57	0	54	0	6	54	0	0	0	0	0	49	39	0	8	88	16	199	215
14:45	1	0	159	5	160	0	93	1	2	94	0	0	0	0	0	82	52	0	7	134	14	388	402
Total	1	0	278	19	279	0	228	2	14	230	0	0	0	0	0	207	158	0	32	365	65	874	939
15:00	1	1	116	6	118	0	64	4	1	68	0	0	0	0	0	49	70	0	13	119	20	305	325
15:15	0	0	132	12	132	0	91	12	4	103	0	0	0	0	0	85	101	0	12	186	28	421	449
15:30	0	0	0	0	0	0	4	0	0	4	0	0	0	0	0	14	4	0	1	18	1	22	23
15:45	0	0	100	8	100	0	67	2	1	69	0	0	0	0	0	20	39	0	9	59	18	228	246
Total	1	1	348	26	350	0	226	18	6	244	0	0	0	0	0	168	214	0	35	382	67	976	1043

John Davenport Engineering Inc.

545 North Trade Street
Winston-Salem, NC 27101
Fax:(336)722-6788

File Name : 08 5067
Site Code : 00000001
Start Date : 9/30/2008
Page No : 2

Groups Printed- All Vehicles

	Finger Mill Road Southbound					US 321 Westbound					t-intersection Northbound					US 321 Eastbound							
Start Time	Left	Thru	Right	Trks	App. Total	Left	Thru	Right	Trks	App. Total	Left	Thru	Right	Trks	App. Total	Left	Thru	Right	Trks	App. Total	Exclu. Total	Inclu. Total	Int. Total
16:00	0	2	145	8	147	0	69	0	5	69	0	0	0	0	0	30	62	0	11	92	24	308	332
16:15	1	0	61	4	62	0	57	1	1	58	0	0	0	0	0	15	57	0	6	72	11	192	203
16:30	1	1	57	9	59	0	65	0	2	65	0	0	0	0	0	30	59	0	15	89	26	213	239
16:45	0	0	66	3	66	0	52	0	2	52	0	0	0	0	0	27	46	0	7	73	12	191	203
Total	2	3	329	24	334	0	243	1	10	244	0	0	0	0	0	102	224	0	39	326	73	904	977
17:00	0	0	86	8	86	0	56	2	3	58	0	0	0	0	0	37	65	1	4	103	15	247	262
17:15	5	0	99	12	104	0	62	0	2	62	0	0	0	0	0	29	69	0	0	98	14	264	278
17:30	0	0	67	5	67	0	45	0	1	45	0	0	0	0	0	22	80	0	3	102	9	214	223
17:45	0	0	85	9	85	0	54	0	2	54	0	0	0	0	0	32	95	0	8	127	19	266	285
Total	5	0	337	34	342	0	217	2	8	219	0	0	0	0	0	120	309	1	15	430	57	991	1048
Grand Total	18	4	2373	280	2395	0	2261	52	87	2313	0	0	0	0	0	2164	2174	1	363	4339	730	9047	9777
Apprch %	0.8	0.2	99.1			0	97.8	2.2			0	0	0			49.9	50.1	0					
Total %	0.2	0	26.2		26.5	0	25	0.6		25.6	0	0	0		0	23.9	24	0		48	7.5	92.5	

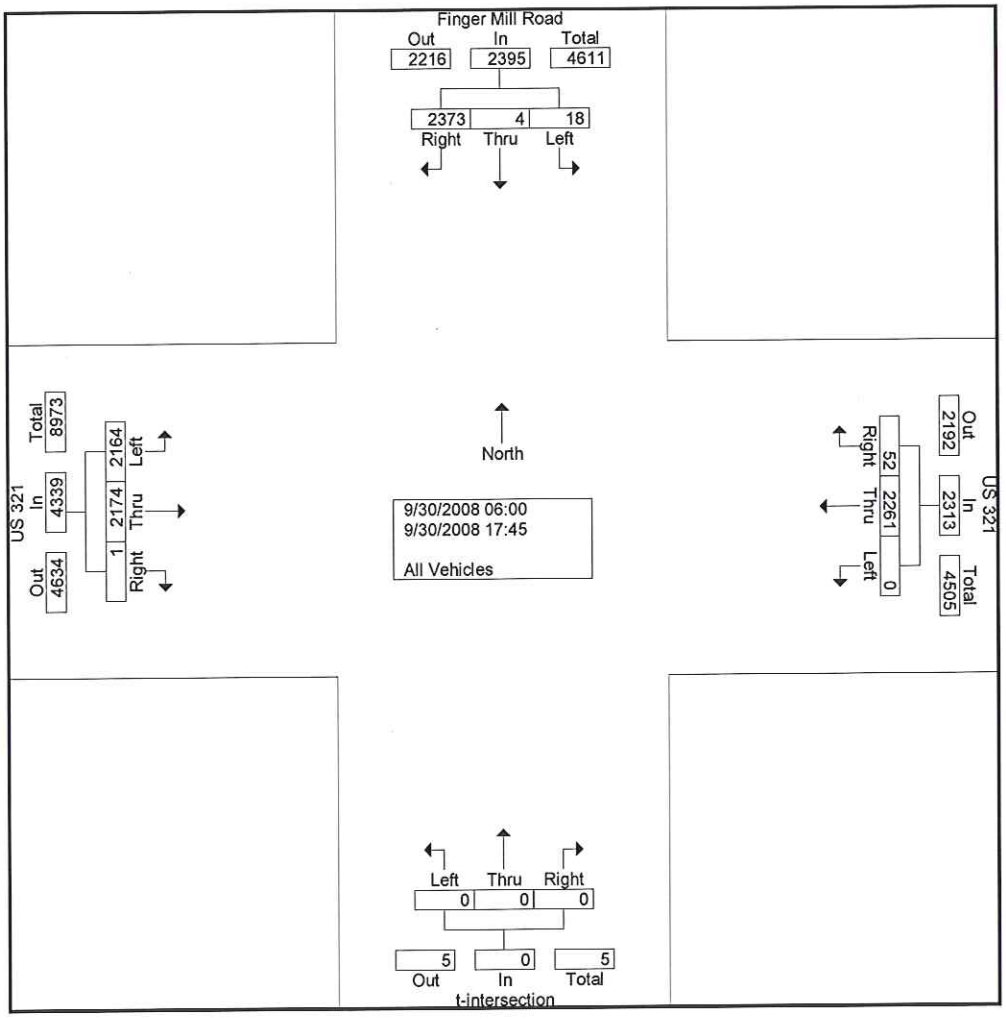

John Davenport Engineering Inc.
545 North Trade Street
Winston-Salem, NC 27101
Fax:(336)722-6788

File Name : 08 5067
Site Code : 00000001
Start Date : 9/30/2008
Page No : 3

	Finger Mill Road Southbound				US 321 Westbound				t-intersection Northbound				US 321 Eastbound				
Start Time	Left	Thru	Right	App. Total	Left	Thru	Right	App. Total	Left	Thru	Right	App. Total	Left	Thru	Right	App. Total	Int. Total
Peak Hour Analysis From 06:00 to 11:45 - Peak 1 of 1																	
Peak Hour for Entire Intersection Begins at 06:00																	
06:00	0	0	**59**	**59**	0	**89**	0	**89**	0	0	0	0	57	**66**	0	123	**271**
06:15	0	0	26	26	0	47	3	50	0	0	0	0	100	34	0	134	210
06:30	0	0	33	33	0	49	**4**	53	0	0	0	0	**103**	37	0	140	226
06:45	0	0	31	31	0	42	0	42	0	0	0	0	100	49	0	**149**	222
Total Volume	0	0	149	149	0	227	7	234	0	0	0	0	360	186	0	546	929
% App. Total	0	0	100		0	97	3		0	0	0		65.9	34.1	0		
PHF	.000	.000	.631	.631	.000	.638	.438	.657	.000	.000	.000	.000	.874	.705	.000	.916	.857

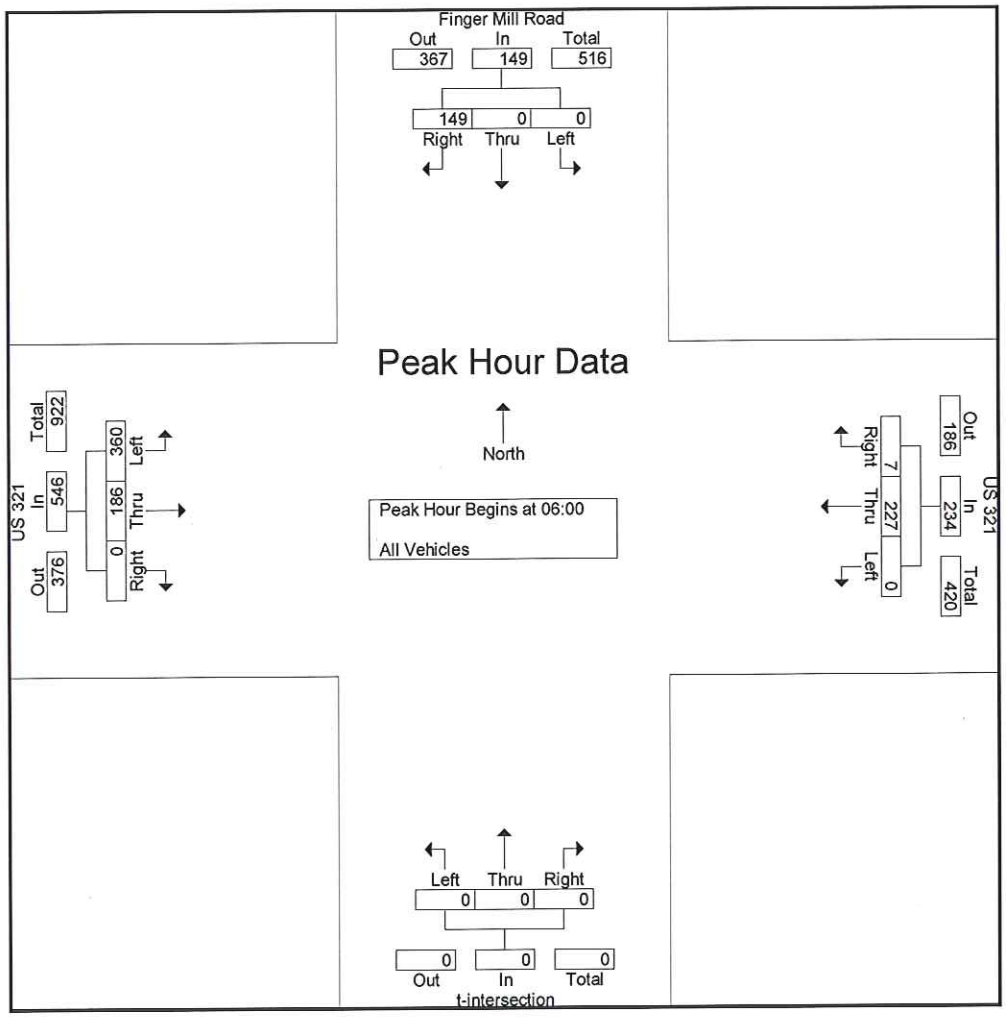

John Davenport Engineering Inc.

545 North Trade Street
Winston-Salem, NC 27101
Fax:(336)722-6788

File Name : 08 5067
Site Code : 00000001
Start Date : 9/30/2008
Page No : 4

	Finger Mill Road Southbound				US 321 Westbound				t-intersection Northbound				US 321 Eastbound				
Start Time	Left	Thru	Right	App. Total	Left	Thru	Right	App. Total	Left	Thru	Right	App. Total	Left	Thru	Right	App. Total	Int. Total
Peak Hour Analysis From 12:00 to 17:45 - Peak 1 of 1																	
Peak Hour for Entire Intersection Begins at 14:30																	
14:30	0	0	57	57	0	54	0	54	0	0	0	0	49	39	0	88	199
14:45	**1**	0	**159**	**160**	0	**93**	1	94	0	0	0	0	82	52	0	134	388
15:00	1	**1**	116	118	0	64	4	68	0	0	0	0	49	70	0	119	305
15:15	0	0	132	132	0	91	**12**	**103**	0	0	0	0	**85**	**101**	0	**186**	**421**
Total Volume	2	1	464	467	0	302	17	319	0	0	0	0	265	262	0	527	1313
% App. Total	0.4	0.2	99.4		0	94.7	5.3		0	0	0		50.3	49.7	0		
PHF	.500	.250	.730	.730	.000	.812	.354	.774	.000	.000	.000	.000	.779	.649	.000	.708	.780

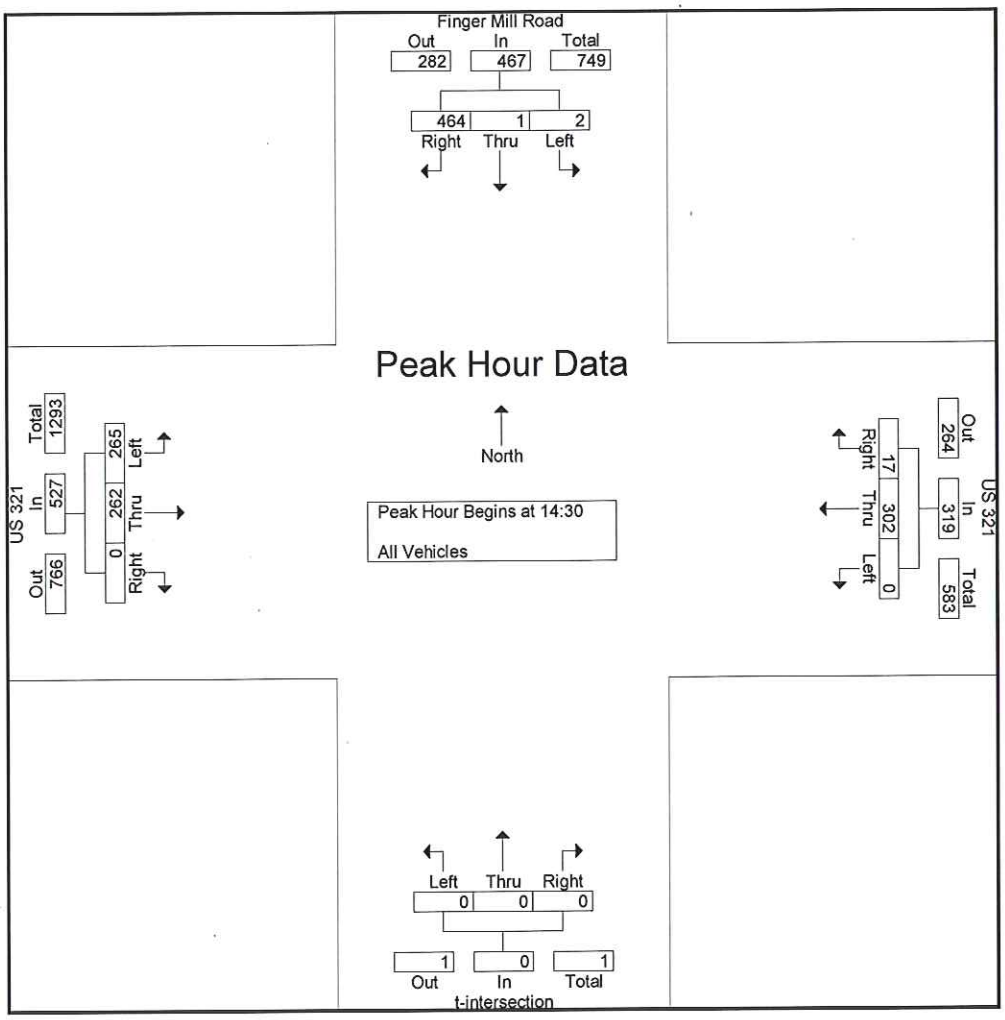

John Davenport Engineering Inc.
545 North Trade Street
Winston-Salem, NC 27101
Fax:(336)722-6788

Counted by: A. Russell

File Name : 08 5067
Site Code : 00000001
Start Date : 9/30/2008
Page No : 1

Weather: Clear

Groups Printed- Trucks

	Finger Mill Road Southbound				US 321 Westbound				t-intersection Northbound				US 321 Eastbound				
Start Time	Left	Thru	Right	App. Total	Left	Thru	Right	App. Total	Left	Thru	Right	App. Total	Left	Thru	Right	App. Total	Int. Total
06:00	0	0	5	5	0	3	0	3	0	0	0	0	2	7	0	9	17
06:15	0	0	3	3	0	1	0	1	0	0	0	0	2	1	0	3	7
06:30	0	0	3	3	0	1	0	1	0	0	0	0	1	2	0	3	7
06:45	0	0	4	4	0	1	0	1	0	0	0	0	3	3	0	6	11
Total	0	0	15	15	0	6	0	6	0	0	0	0	8	13	0	21	42
07:00	0	0	2	2	0	1	0	1	0	0	0	0	1	3	0	4	7
07:15	0	0	3	3	0	3	0	3	0	0	0	0	0	4	0	4	10
07:30	0	0	4	4	0	0	0	0	0	0	0	0	1	3	0	4	8
07:45	0	0	3	3	0	0	0	0	0	0	0	0	0	3	0	3	6
Total	0	0	12	12	0	4	0	4	0	0	0	0	2	13	0	15	31
08:00	0	0	5	5	0	0	0	0	0	0	0	0	3	4	0	7	12
08:15	0	0	3	3	0	3	0	3	0	0	0	0	6	2	0	8	14
08:30	0	0	4	4	0	1	0	1	0	0	0	0	4	5	0	9	14
08:45	0	0	1	1	0	2	0	2	0	0	0	0	0	4	0	4	7
Total	0	0	13	13	0	6	0	6	0	0	0	0	13	15	0	28	47
09:00	0	0	5	5	0	0	0	0	0	0	0	0	2	3	0	5	10
09:15	0	0	5	5	0	2	0	2	0	0	0	0	4	5	0	9	16
09:30	0	0	7	7	0	2	0	2	0	0	0	0	5	5	0	10	19
09:45	0	0	8	8	0	4	0	4	0	0	0	0	9	1	0	10	22
Total	0	0	25	25	0	8	0	8	0	0	0	0	20	14	0	34	67
10:00	0	0	8	8	0	0	0	0	0	0	0	0	6	5	0	11	19
10:15	0	0	4	4	0	0	0	0	0	0	0	0	6	0	0	6	10
10:30	0	0	7	7	0	2	0	2	0	0	0	0	6	4	0	10	19
10:45	0	0	10	10	0	2	1	3	0	0	0	0	5	3	0	8	21
Total	0	0	29	29	0	4	1	5	0	0	0	0	23	12	0	35	69
11:00	0	0	7	7	0	0	0	0	0	0	0	0	5	4	0	9	16
11:15	0	0	6	6	0	2	0	2	0	0	0	0	8	2	0	10	18
11:30	0	0	9	9	0	0	0	0	0	0	0	0	3	5	0	8	17
11:45	0	0	5	5	0	3	0	3	0	0	0	0	3	6	0	9	17
Total	0	0	27	27	0	5	0	5	0	0	0	0	19	17	0	36	68
12:00	0	0	7	7	0	1	0	1	0	0	0	0	6	2	0	8	16
12:15	0	0	8	8	0	0	1	1	0	0	0	0	8	3	0	11	20
12:30	0	0	11	11	0	2	0	2	0	0	0	0	7	5	0	12	25
12:45	0	0	6	6	0	1	0	1	0	0	0	0	8	2	0	10	17
Total	0	0	32	32	0	4	1	5	0	0	0	0	29	12	0	41	78
13:00	0	0	7	7	0	4	0	4	0	0	0	0	4	3	0	7	18
13:15	0	0	7	7	0	2	0	2	0	0	0	0	4	5	0	9	18
13:30	0	0	5	5	0	0	0	0	0	0	0	0	6	2	0	8	13
13:45	0	0	5	5	0	4	0	4	0	0	0	0	2	6	0	8	17
Total	0	0	24	24	0	10	0	10	0	0	0	0	16	16	0	32	66
14:00	0	0	6	6	0	1	0	1	0	0	0	0	6	5	0	11	18
14:15	0	0	6	6	0	4	1	5	0	0	0	0	4	2	0	6	17
14:30	0	0	2	2	0	5	1	6	0	0	0	0	7	1	0	8	16
14:45	0	0	5	5	0	2	0	2	0	0	0	0	4	3	0	7	14
Total	0	0	19	19	0	12	2	14	0	0	0	0	21	11	0	32	65
15:00	0	0	6	6	0	1	0	1	0	0	0	0	12	1	0	13	20
15:15	0	0	12	12	0	4	0	4	0	0	0	0	7	5	0	12	28
15:30	0	0	0	0	0	0	0	0	0	0	0	0	1	0	0	1	1
15:45	0	0	8	8	0	1	0	1	0	0	0	0	5	4	0	9	18
Total	0	0	26	26	0	6	0	6	0	0	0	0	25	10	0	35	67

John Davenport Engineering Inc.

545 North Trade Street
Winston-Salem, NC 27101
Fax:(336)722-6788

File Name : 08 5067
Site Code : 00000001
Start Date : 9/30/2008
Page No : 2

Groups Printed- Trucks

	Finger Mill Road Southbound				US 321 Westbound				t-intersection Northbound				US 321 Eastbound				
Start Time	Left	Thru	Right	App. Total	Left	Thru	Right	App. Total	Left	Thru	Right	App. Total	Left	Thru	Right	App. Total	Int. Total
16:00	0	0	8	8	0	5	0	5	0	0	0	0	8	3	0	11	24
16:15	0	0	4	4	0	1	0	1	0	0	0	0	5	1	0	6	11
16:30	1	0	8	9	0	2	0	2	0	0	0	0	8	7	0	15	26
16:45	0	0	3	3	0	2	0	2	0	0	0	0	6	1	0	7	12
Total	1	0	23	24	0	10	0	10	0	0	0	0	27	12	0	39	73
17:00	0	0	8	8	0	3	0	3	0	0	0	0	3	1	0	4	15
17:15	0	0	12	12	0	2	0	2	0	0	0	0	0	0	0	0	14
17:30	0	0	5	5	0	1	0	1	0	0	0	0	3	0	0	3	9
17:45	0	0	9	9	0	2	0	2	0	0	0	0	3	5	0	8	19
Total	0	0	34	34	0	8	0	8	0	0	0	0	9	6	0	15	57
Grand Total	1	0	279	280	0	83	4	87	0	0	0	0	212	151	0	363	730
Apprch %	0.4	0	99.6		0	95.4	4.6		0	0	0		58.4	41.6	0		
Total %	0.1	0	38.2	38.4	0	11.4	0.5	11.9	0	0	0	0	29	20.7	0	49.7	

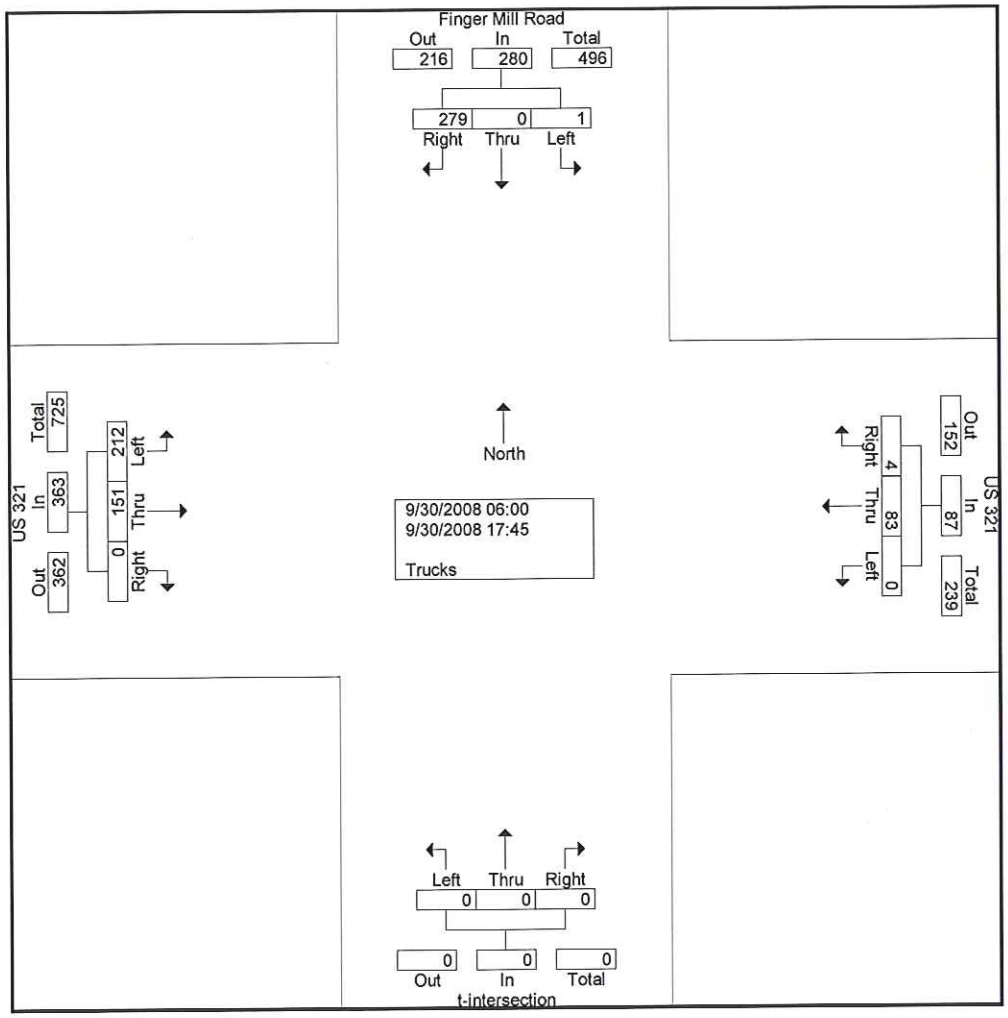

John Davenport Engineering Inc.
545 North Trade Street
Winston-Salem, NC 27101
Fax:(336)722-6788

File Name : 08 5067
Site Code : 00000001
Start Date : 9/30/2008
Page No : 3

	Finger Mill Road Southbound				US 321 Westbound				t-intersection Northbound				US 321 Eastbound				
Start Time	Left	Thru	Right	App. Total	Left	Thru	Right	App. Total	Left	Thru	Right	App. Total	Left	Thru	Right	App. Total	Int. Total
Peak Hour Analysis From 06:00 to 11:45 - Peak 1 of 1																	
Peak Hour for Entire Intersection Begins at 09:15																	
09:15	0	0	5	5	0	2	0	2	0	0	0	0	4	**5**	0	9	16
09:30	0	0	7	7	0	2	0	2	0	0	0	0	5	5	0	10	19
09:45	0	0	**8**	**8**	0	**4**	0	**4**	0	0	0	0	**9**	1	0	10	**22**
10:00	0	0	8	8	0	0	0	0	0	0	0	0	6	5	0	**11**	19
Total Volume	0	0	28	28	0	8	0	8	0	0	0	0	24	16	0	40	76
% App. Total	0	0	100		0	100	0		0	0	0		60	40	0		
PHF	.000	.000	.875	.875	.000	.500	.000	.500	.000	.000	.000	.000	.667	.800	.000	.909	.864

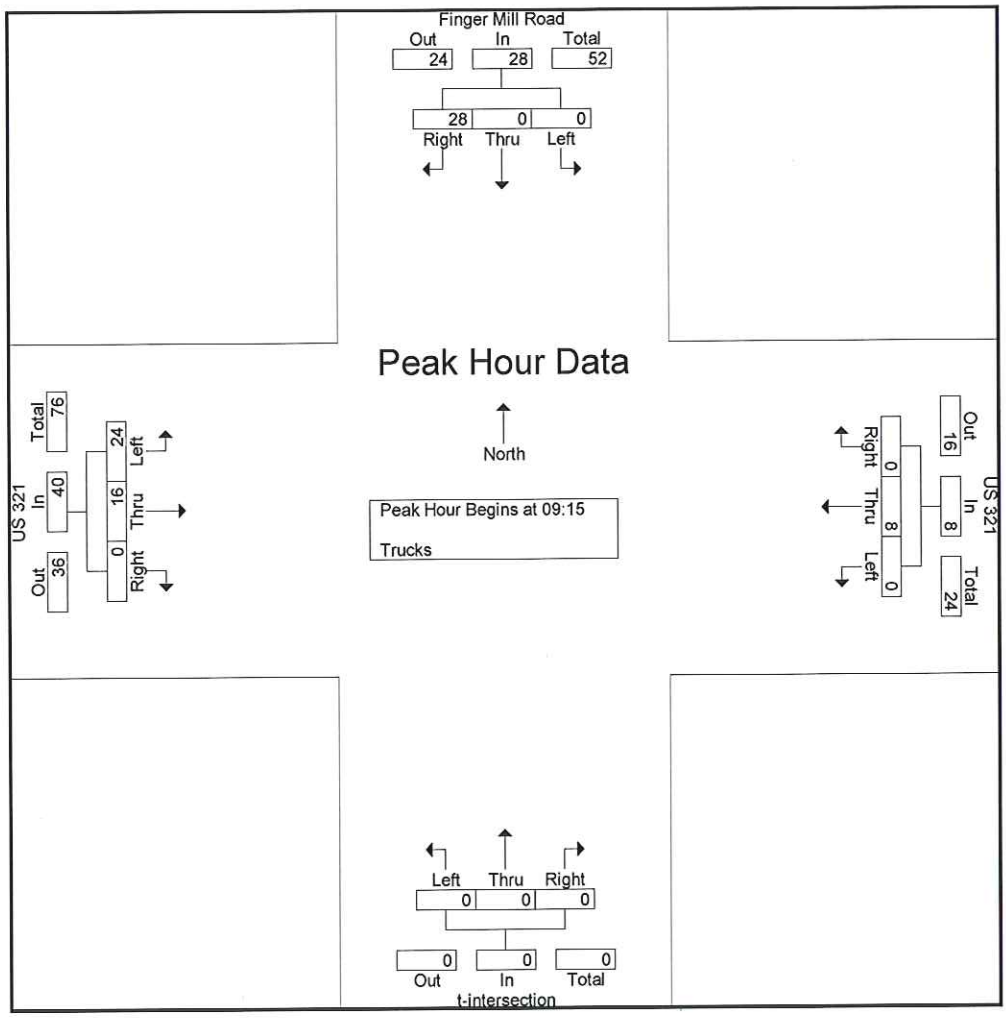

John Davenport Engineering Inc.

545 North Trade Street
Winston-Salem, NC 27101
Fax:(336)722-6788

File Name : 08 5067
Site Code : 00000001
Start Date : 9/30/2008
Page No : 4

	Finger Mill Road Southbound				US 321 Westbound				t-intersection Northbound				US 321 Eastbound				
Start Time	Left	Thru	Right	App. Total	Left	Thru	Right	App. Total	Left	Thru	Right	App. Total	Left	Thru	Right	App. Total	Int. Total
Peak Hour Analysis From 12:00 to 17:45 - Peak 1 of 1																	
Peak Hour for Entire Intersection Begins at 12:15																	
12:15	0	0	8	8	0	0	**1**	1	0	0	0	0	**8**	3	0	11	20
12:30	0	0	**11**	**11**	0	2	0	2	0	0	0	0	7	**5**	0	**12**	**25**
12:45	0	0	6	6	0	1	0	1	0	0	0	0	8	2	0	10	17
13:00	0	0	7	7	0	**4**	0	**4**	0	0	0	0	4	3	0	7	18
Total Volume	0	0	32	32	0	7	1	8	0	0	0	0	27	13	0	40	80
% App. Total	0	0	100		0	87.5	12.5		0	0	0		67.5	32.5	0		
PHF	.000	.000	.727	.727	.000	.438	.250	.500	.000	.000	.000	.000	.844	.650	.000	.833	.800

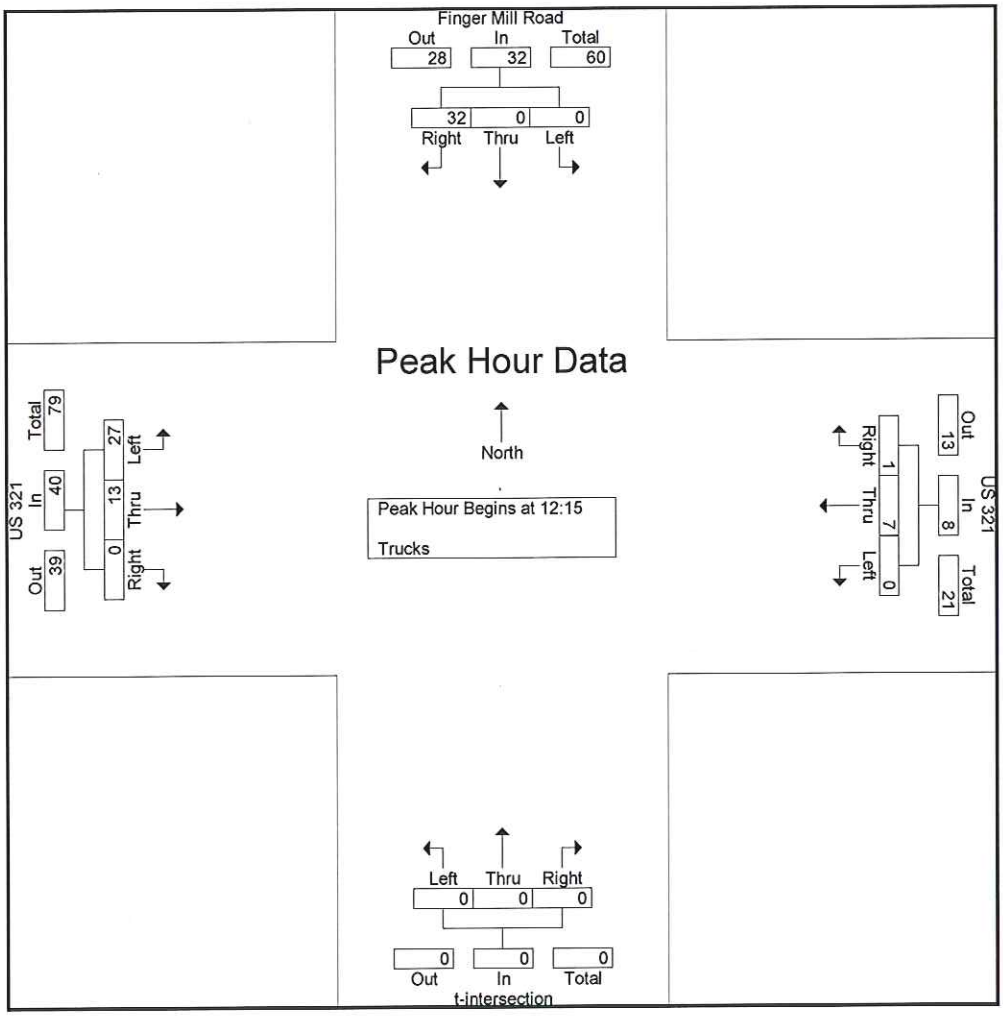

John Davenport Engineering Inc.
545 North Trade Street
Winston-Salem, NC 27101
Fax:(336)722-6788

Counted by: A. Russell

Weather: Clear

File Name : 08 5067
Site Code : 00000001
Start Date : 9/30/2008
Page No : 1

Groups Printed- Pedestrians

	Finger Mill Road Southbound				US 321 Westbound				t-intersection Northbound				US 321 Eastbound				
Start Time	Left	Thru	Right	App. Total	Left	Thru	Right	App. Total	Left	Thru	Right	App. Total	Left	Thru	Right	App. Total	Int. Total
06:00	0	0	0	0	0	0	0	0	0	0	0	0	0	0	0	0	0
06:15	0	0	0	0	0	0	0	0	0	0	0	0	0	0	0	0	0
06:30	0	0	0	0	0	0	0	0	0	0	0	0	0	0	0	0	0
06:45	0	0	0	0	0	0	0	0	0	0	0	0	0	0	0	0	0
Total	0	0	0	0	0	0	0	0	0	0	0	0	0	0	0	0	0
07:00	0	0	0	0	0	0	0	0	0	0	0	0	0	0	0	0	0
07:15	0	0	0	0	0	0	0	0	0	0	0	0	0	0	0	0	0
07:30	0	0	0	0	0	0	0	0	0	0	0	0	0	0	0	0	0
07:45	0	0	0	0	0	0	0	0	0	0	0	0	0	0	0	0	0
Total	0	0	0	0	0	0	0	0	0	0	0	0	0	0	0	0	0
08:00	0	0	0	0	0	0	0	0	0	0	0	0	0	0	0	0	0
08:15	0	0	0	0	0	0	0	0	0	0	0	0	0	0	0	0	0
08:30	0	0	0	0	0	0	0	0	0	0	0	0	0	0	0	0	0
08:45	0	0	0	0	0	0	0	0	0	0	0	0	0	0	0	0	0
Total	0	0	0	0	0	0	0	0	0	0	0	0	0	0	0	0	0
09:00	0	0	0	0	0	0	0	0	0	0	0	0	0	0	0	0	0
09:15	0	0	0	0	0	0	0	0	0	0	0	0	0	0	0	0	0
09:30	0	0	0	0	0	0	0	0	0	0	0	0	0	0	0	0	0
09:45	0	0	0	0	0	0	0	0	0	0	0	0	0	0	0	0	0
Total	0	0	0	0	0	0	0	0	0	0	0	0	0	0	0	0	0
10:00	0	0	0	0	0	0	0	0	0	0	0	0	0	0	0	0	0
10:15	0	0	0	0	0	0	0	0	0	0	0	0	0	0	0	0	0
10:30	0	0	0	0	0	0	0	0	0	0	0	0	0	0	0	0	0
10:45	0	0	0	0	0	0	0	0	0	0	0	0	0	0	0	0	0
Total	0	0	0	0	0	0	0	0	0	0	0	0	0	0	0	0	0
11:00	0	0	0	0	0	0	0	0	0	0	0	0	0	0	0	0	0
11:15	0	0	0	0	0	0	0	0	0	0	0	0	0	0	0	0	0
11:30	0	0	0	0	0	0	0	0	0	0	0	0	0	0	0	0	0
11:45	0	0	0	0	0	0	0	0	0	0	0	0	0	0	0	0	0
Total	0	0	0	0	0	0	0	0	0	0	0	0	0	0	0	0	0
12:00	0	0	0	0	0	0	0	0	0	0	0	0	0	0	0	0	0
12:15	0	0	0	0	0	0	0	0	0	0	0	0	0	0	0	0	0
12:30	0	0	0	0	0	0	0	0	0	0	0	0	0	0	0	0	0
12:45	0	0	0	0	0	0	0	0	0	0	0	0	0	0	0	0	0
Total	0	0	0	0	0	0	0	0	0	0	0	0	0	0	0	0	0
13:00	0	0	0	0	0	0	0	0	0	0	0	0	0	0	0	0	0
13:15	0	0	0	0	0	0	0	0	0	0	0	0	0	0	0	0	0
13:30	0	0	0	0	0	0	0	0	0	0	0	0	0	0	0	0	0
13:45	0	0	0	0	0	0	0	0	0	0	0	0	0	0	0	0	0
Total	0	0	0	0	0	0	0	0	0	0	0	0	0	0	0	0	0
14:00	0	0	0	0	0	0	0	0	0	0	0	0	0	0	0	0	0
14:15	0	0	0	0	0	0	0	0	0	0	0	0	0	0	0	0	0
14:30	0	0	0	0	0	0	0	0	0	0	0	0	0	0	0	0	0
14:45	0	0	0	0	0	0	0	0	0	0	0	0	0	0	0	0	0
Total	0	0	0	0	0	0	0	0	0	0	0	0	0	0	0	0	0
15:00	0	0	0	0	0	0	0	0	0	0	0	0	0	0	0	0	0
15:15	0	0	0	0	0	0	0	0	0	0	0	0	0	0	0	0	0
15:30	0	0	0	0	0	0	0	0	0	0	0	0	0	0	0	0	0
15:45	0	0	0	0	0	0	0	0	0	0	0	0	0	0	0	0	0
Total	0	0	0	0	0	0	0	0	0	0	0	0	0	0	0	0	0

John Davenport Engineering Inc.
545 North Trade Street
Winston-Salem, NC 27101
Fax:(336)722-6788

File Name : 08 5067
Site Code : 00000001
Start Date : 9/30/2008
Page No : 2

Groups Printed- Pedestrians

	Finger Mill Road Southbound				US 321 Westbound				t-intersection Northbound				US 321 Eastbound				
Start Time	Left	Thru	Right	App. Total	Left	Thru	Right	App. Total	Left	Thru	Right	App. Total	Left	Thru	Right	App. Total	Int. Total
16:00	0	0	0	0	0	0	0	0	0	0	0	0	0	0	0	0	0
16:15	0	0	0	0	0	0	0	0	0	0	0	0	0	0	0	0	0
16:30	0	0	0	0	0	0	0	0	0	0	0	0	0	0	0	0	0
16:45	0	0	0	0	0	0	0	0	0	0	0	0	0	0	0	0	0
Total	0	0	0	0	0	0	0	0	0	0	0	0	0	0	0	0	0
17:00	0	0	0	0	0	0	0	0	0	0	0	0	0	0	0	0	0
17:15	0	0	0	0	0	0	0	0	0	0	0	0	0	0	0	0	0
17:30	0	0	0	0	0	0	0	0	0	0	0	0	0	0	0	0	0
17:45	0	0	0	0	0	0	0	0	0	0	0	0	0	0	0	0	0
Total	0	0	0	0	0	0	0	0	0	0	0	0	0	0	0	0	0
Grand Total	0	0	0	0	0	0	0	0	0	0	0	0	0	0	0	0	0
Apprch %	0	0	0		0	0	0		0	0	0		0	0	0		
Total %																	

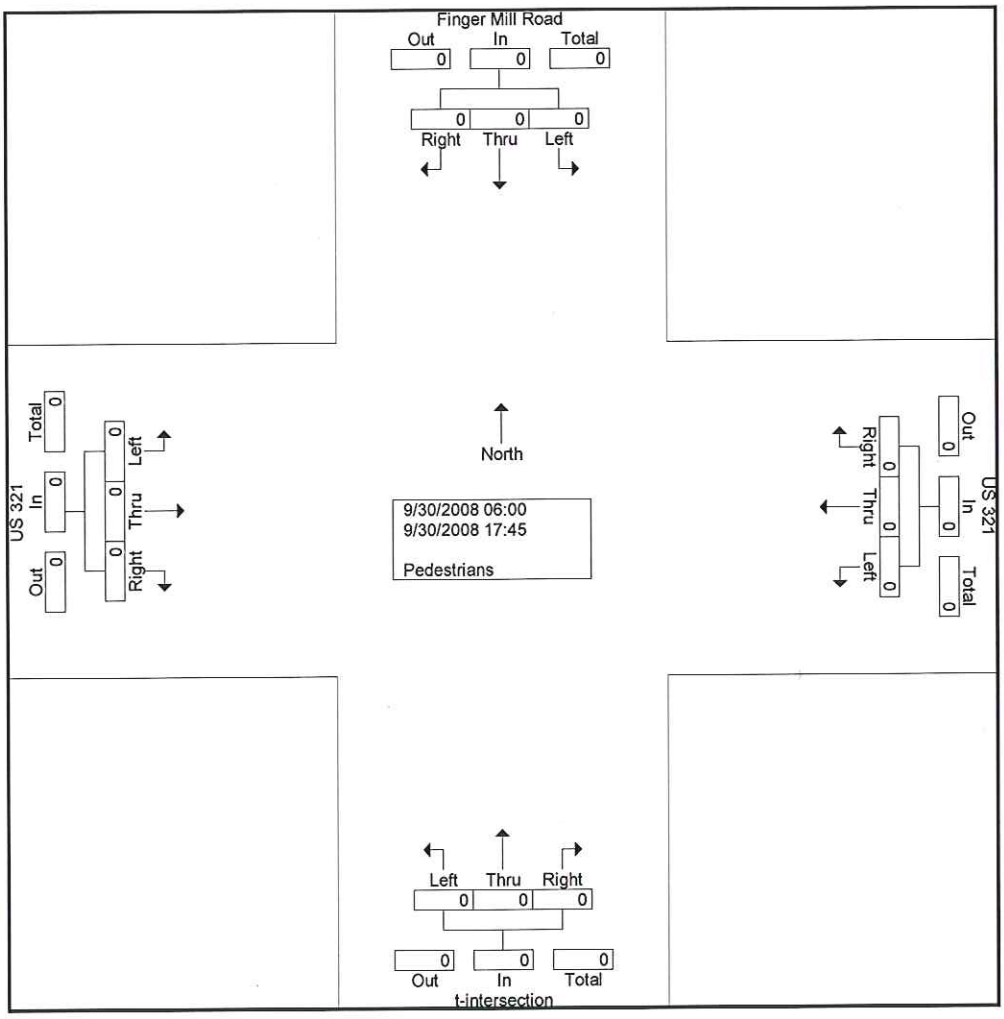

John Davenport Engineering Inc.
545 North Trade Street
Winston-Salem, NC 27101
Fax:(336)722-6788

File Name : 08 5067
Site Code : 00000001
Start Date : 9/30/2008
Page No : 3

	Finger Mill Road Southbound				US 321 Westbound				t-intersection Northbound				US 321 Eastbound				
Start Time	Left	Thru	Right	App. Total	Left	Thru	Right	App. Total	Left	Thru	Right	App. Total	Left	Thru	Right	App. Total	Int. Total
Peak Hour Analysis From 06:00 to 11:45 - Peak 1 of 1																	
Peak Hour for Entire Intersection Begins at 06:00																	
06:00	0	0	0	0	0	0	0	0	0	0	0	0	0	0	0	0	0
06:15	0	0	0	0	0	0	0	0	0	0	0	0	0	0	0	0	0
06:30	0	0	0	0	0	0	0	0	0	0	0	0	0	0	0	0	0
06:45	0	0	0	0	0	0	0	0	0	0	0	0	0	0	0	0	0
Total Volume	0	0	0	0	0	0	0	0	0	0	0	0	0	0	0	0	0
% App. Total	0	0	0		0	0	0		0	0	0		0	0	0		
PHF	.000	.000	.000	.000	.000	.000	.000	.000	.000	.000	.000	.000	.000	.000	.000	.000	.000

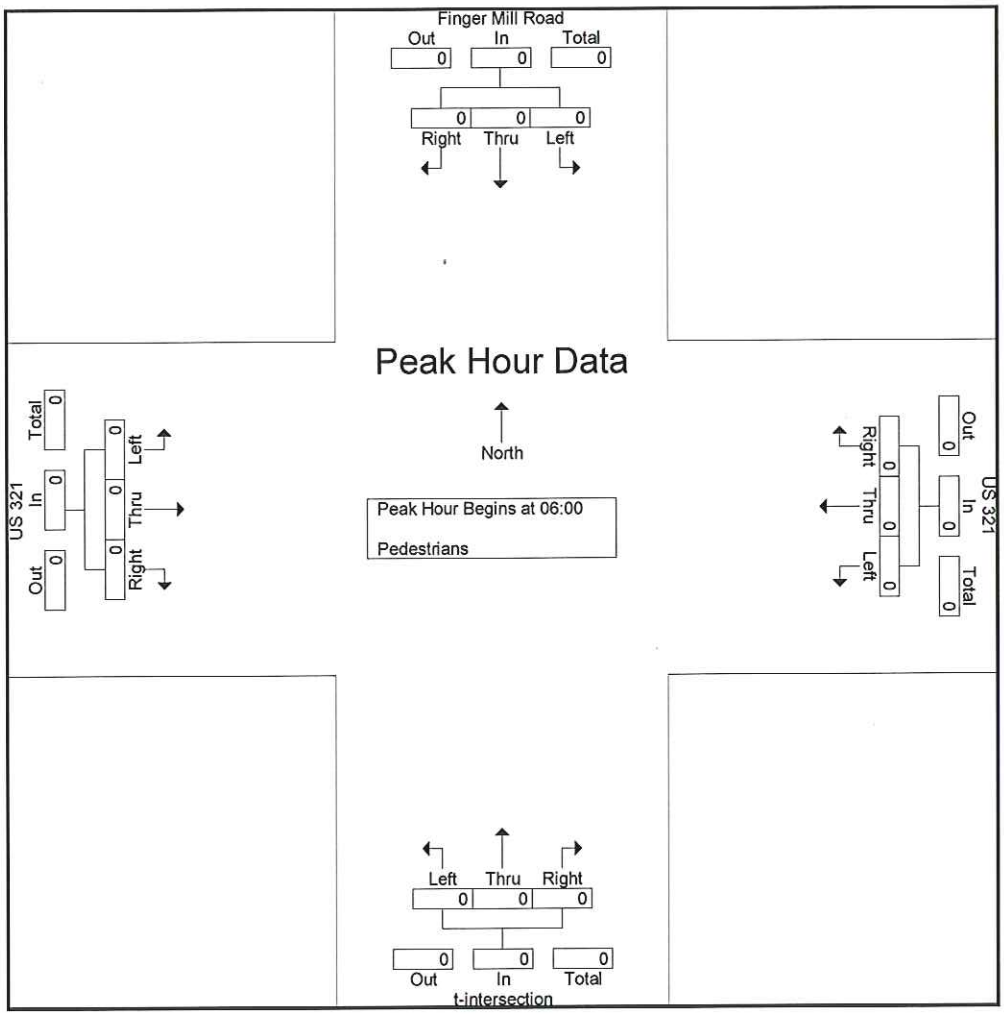

John Davenport Engineering Inc.
545 North Trade Street
Winston-Salem, NC 27101
Fax:(336)722-6788

File Name : 08 5067
Site Code : 00000001
Start Date : 9/30/2008
Page No : 4

	Finger Mill Road Southbound				US 321 Westbound				t-intersection Northbound				US 321 Eastbound				
Start Time	Left	Thru	Right	App. Total	Left	Thru	Right	App. Total	Left	Thru	Right	App. Total	Left	Thru	Right	App. Total	Int. Total
Peak Hour Analysis From 12:00 to 17:45 - Peak 1 of 1																	
Peak Hour for Entire Intersection Begins at 12:00																	
12:00	0	0	0	0	0	0	0	0	0	0	0	0	0	0	0	0	0
12:15	0	0	0	0	0	0	0	0	0	0	0	0	0	0	0	0	0
12:30	0	0	0	0	0	0	0	0	0	0	0	0	0	0	0	0	0
12:45	0	0	0	0	0	0	0	0	0	0	0	0	0	0	0	0	0
Total Volume	0	0	0	0	0	0	0	0	0	0	0	0	0	0	0	0	0
% App. Total	0	0	0		0	0	0		0	0	0		0	0	0		
PHF	.000	.000	.000	.000	.000	.000	.000	.000	.000	.000	.000	.000	.000	.000	.000	.000	.000

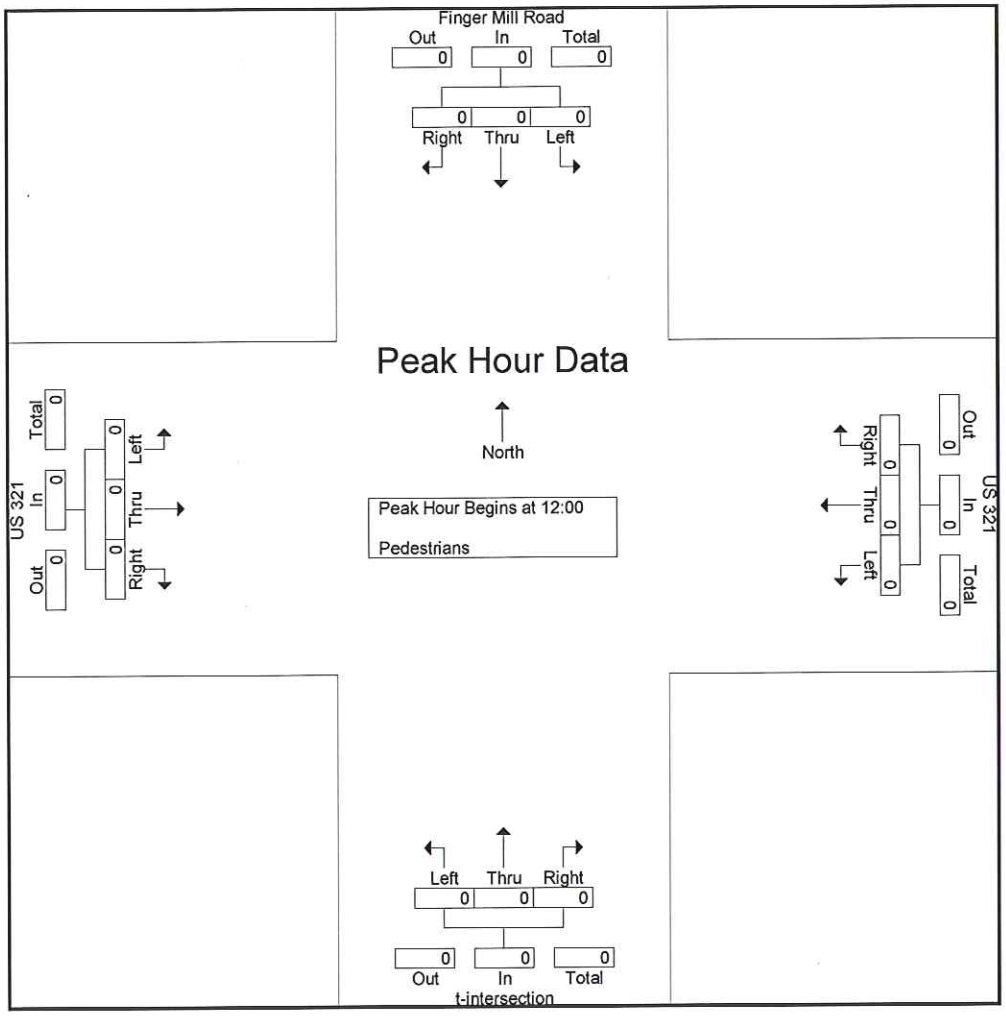

John Davenport Engineering, Inc. Project No. 08-5067, NCDOT Count No. 08-5067: US 321 Business @ SR 1276 (Finger Mill Road)
Lincoln County, NC

US 321 Bus @ SR 1276 (Finger Mill Road) looking North

US 321 Bus @ SR 1276 (Finger Mill Road) looking South

US 321 Bus @ SR 1276 (Finger Mill Road) looking East

US 321 Bus @ SR 1276 (Finger Mill Road) looking West