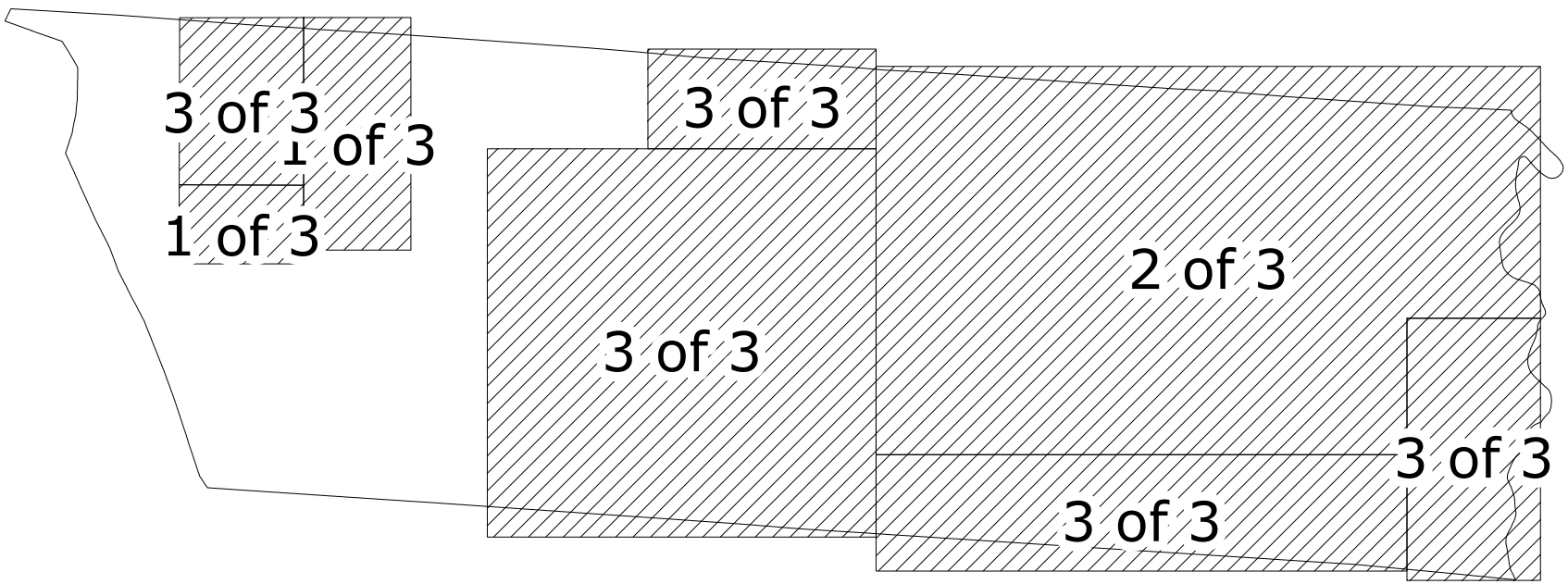

Lincoln County