SpeedInfo Device Interface

SpeedInfo uses radar technology to determine estimated speeds from several speed sensor sites deployed on four of North Carolina's limited access roadways. There are 31 speed sensor sites on I-40 from mile marker 262 to mile marker 314, 5 sensor sites on I-85 from mile marker 162 to mile marker 172, 7 sensor sites on NC-147 from mile marker 5 to mile marker 17, and 20 sensor sites on I-95 from mile marker 81 to mile marker 180. Figure III-14 depicts the current location and speeds for the covered roads on June 5, 2007.

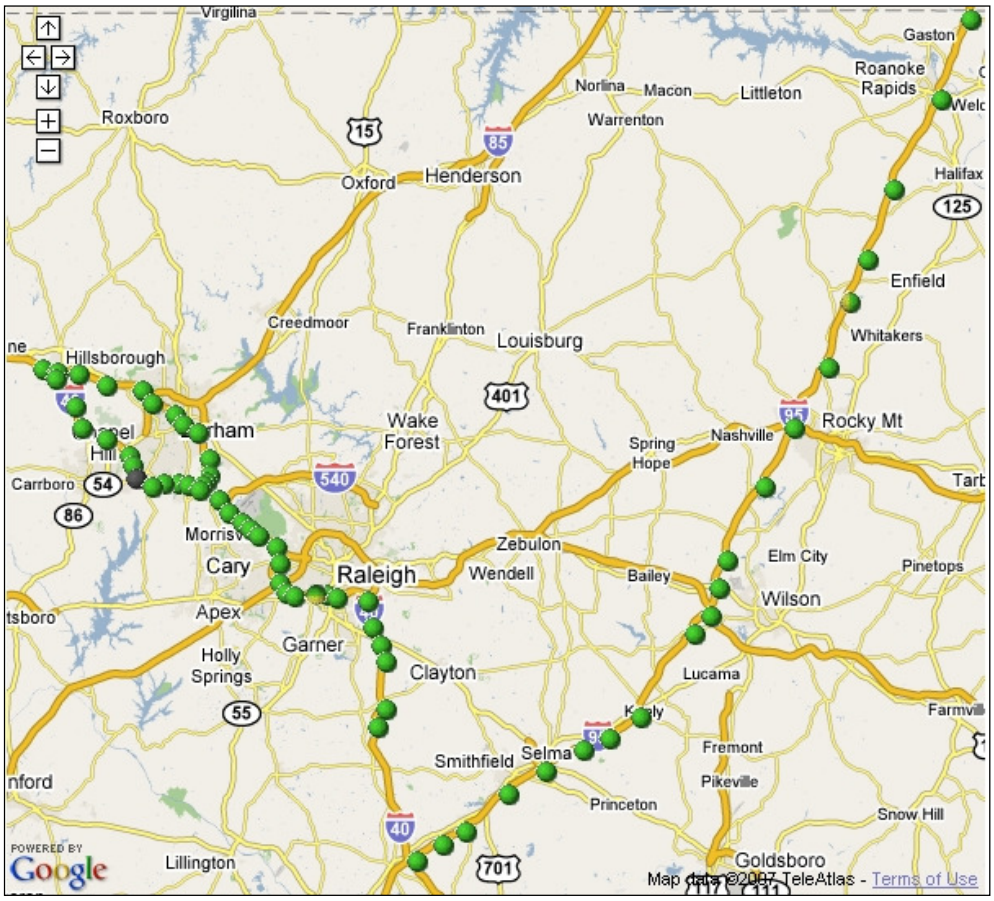

Figure III-1 SpeedInfo Coverage June 5, 2007

Each site contains bi-directional sensors that read traffic speeds for eastbound and westbound traffic on I-40 and northbound and southbound traffic on I-95. Data from the SpeedInfo sensors is acquired by the company's SpeedInfo Data Server. The Vendor will connect to the SpeedInfo Data Server to receive speed updates once per minute and integrate the data with Smartlink. Currently, before Smartlink is implemented, the speed data is posted to the North Carolina Department of Transportation (NCDOT) SpeedInfo website by PBS&J. The website is accessible via the internet using a standard internet browser at the following URL: http://www.ncdot-traffic.com/

SpeedInfo sensor data is collected by the company manufacturing the SpeedInfo devices and made available for a fee through the SpeedInfo Data Server. A proprietary SpeedInfo developed Java plug-in connects to the SpeedInfo Data Server and requests speed data for all NCDOT SpeedInfo sensors once per minute. The Java plug-in reformats this into comma-delimited text files for distribution. Figure III-15 depicts the SpeedInfo data architecture.

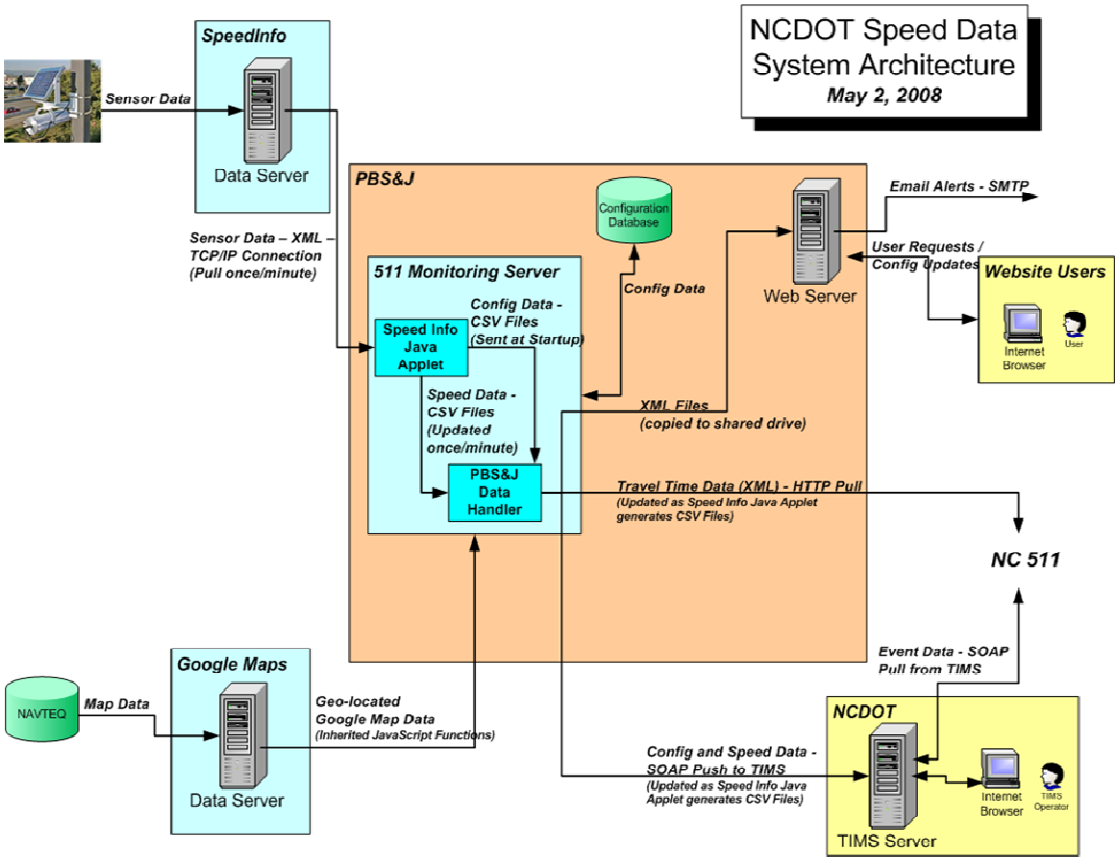

Figure III-2 SpeedInfo Data Architecture for Smartlink

SpeedInfo Data Server to Java Plug-in

The Java Plug-in connects to the SpeedInfo Data Server and requests sensor configuration and speed data. Configuration data is requested once upon connection or re-connection, if the initial connection is lost. The SpeedInfo Data Server also pushes configuration data if its sensor configuration is updated. Speed data is requested once per configurable amount of time. The Java plug-in is currently configured to receive speed data updates once every 60 seconds. Smartlink will include the ability to change the collection time through the Smartlink GUI.

The SpeedInfo Data Server sends all data in Extensible Markup Language (XML) format over a socket connection. For more information about the various XML fields and connection information, refer to the System Design (for the) NCDOT SpeedInfo Website on the Smartlink Team website.

.

Java Plug-in to NCDOT SpeedInfo Website Data Provider

The Java Plug-in writes a new comma-delimited file to a predetermined output directory every time it receives XML data from the SpeedInfo Data Server. The output directory is hard coded within the Java Plug-in source code. However, the source code to this plug-in will be provide so that the output directory can be modified as needed. Upon receiving sensor configuration data, the Java Plug-in writes the file "DeviceConfig.csv". Table III-9 lists all fields reported in "DeviceConfig.csv" (in the order in which they are reported). This file shall include one entry per sensor. The Java Plug-in and its source code will be provided by NCDOT.

Table III-1 Device Configuration Comma-Delimited File

Field Name	Example Value	Description
DeviceID	7545	A unique identifier associated with a sensor.
RoadName	I-40	The roadway on which the sensor is located.
RoadDir	W	The direction of travel that the sensor is reporting.
Latitude	35.75591	The latitude value in degrees of the sensor's location.
Longitude	-78.71641	The longitude value in degrees of the sensor's location.

Upon receiving speed data from the SpeedInfo Data Server, the Java plug-in writes the file "SpeedDataXX.csv". The "XX" represents an integer from zero to one less than the maximum number of files configured that is currently set to 60. After the Smartlink SpeedInfo Interface Driver reads and processes SpeedData0.csv, it will look for SpeedData1.csv, which initially shall not exist. Once the Java plug-in writes SpeedData1.csv, the Smartlink SpeedInfo Interface Driver will read and process it and then look for SpeedData2.csv. Once both applications reach one less than the maximum number of files configured, the Smartlink SpeedInfo Interface Driver will write and read SpeedData0.csv. To ensure that the Java plug-in is writing a new file every time, the Smartlink SpeedInfo Interface Driver will delete old files. A configurable number of speed data files will be kept (currently set to 30). After one more than this configurable number of speed data files are written by the Java plug-in and the NCDOT Smartlink SpeedInfo Interface Driver reads the newest file, the oldest file is deleted.

Table III-10 lists all fields reported in the speed data comma-delimited file written by the Java plug-in. This file shall include one entry per sensor; hence, there shall be the same number of entries in this list as in the device configuration file.

Table III-2 Speed Data Comma-Delimited File

Field Name	Example Value	Description
DeviceID	7545	A unique identifier associated with a sensor.
ReadTime	2006-03-28 05:45:04	The timestamp when the speed was reported by the sensor.
Status	OK	The current reported status of the sensor. This value can be "OK" or "OUT-OF-SERVICE".
Speed	65	The speed reported by the sensor.

Smartlink SpeedInfo Data to NCDOT TIMS Interface

SOAP requests will be used to push data from Smartlink to the NCDOT Traveler Information Management System (TIMS) in XML format. NCDOT has implemented a web service that provides functions to insert updated Speed Data and updated Sensor IDs into the TIMS SpeedInfo database. A description of these functions is included in Appendix B of the System Design (for the) NCDOT SpeedInfo Website. When a SOAP request is sent to the NCDOT web service, these functions are used to parse the incoming data and make the necessary database updates.

Two types of SOAP requests, InsertSensorDataList and ChangeSensorId will be required. The InsertSensorDataList SOAP request contains updated speed data from all sensors reporting speed data. Below is a portion of an example of an InsertSensorDataList XML request. This request is generated when updated data is sent from the Java Plug-in to the Smartlink SpeedInfo Interface Driver. The "SensorTimeStamp" field is in Coordinated Universal Time (UTC).

The ChangeSensorId SOAP request is sent if a Sensor ID changes. Occasionally, when SpeedInfo performs SpeedInfo server updates, a sensor could be assigned a new Sensor ID without any other configuration data changing. When the Smartlink SpeedInfo Interface Driver detects that a Sensor ID has changed, a ChangeSensorId SOAP request is sent. An example of a ChangeSensorId SOAP request is provided below.

For more information on NCDOT's TIMS web service, reference their online documentation: http://appsqc.dot.state.nc.us/TIMS/webservice/sensorinput.asmx