PROJECT REFERENCE NO.	SHEET NO.
R-2237C	2
R/W SHEET NO.	
ROADWAY DESIGN ENGINEER	PAVEMENT DESIGN ENGINEER

FINAL PAVEMENT SCHEDULE

C1	PROP. APPROX. 3" ASPHALT CONCRETE SURFACE COURSE, TYPE S9.5B, AT AN AVERAGE RATE OF 168 LBS. PER SQ. YD. IN EACH OF TWO LAYERS.	E5	PROP. APPROX. 5" ASPHALT CONCRETE BASE COURSE, TYPE B25.0C, AT AN AVERAGE RATE OF 570 LBS. PER SQ. YD.
C2	PROP. VAR. DEPTH ASPHALT CONCRETE SURFACE COURSE, TYPE S9.5B, AT AN AVERAGE RATE OF 112 LBS. PER SQ. YD. PER 1" DEPTH. TO BE PLACED IN LAYERS NOT TO EXCEED 2" IN DEPTH.	E6	PROP. APPROX. 7" ASPHALT CONCRETE BASE COURSE, TYPE B25.0C, AT AN AVERAGE RATE OF 399 LBS. PER SQ. YD. IN EACH OF TWO LAYERS.
C3	PROP. APPROX. 1½" ASPHALT CONCRETE SURFACE COURSE, TYPE S9.5C AT AN AVERAGE RATE OF 168 LBS. PER SQ. YD.	E7	PROP. VAR. DEPTH ASPHALT CONCRETE BASE COURSE, TYPE B25.0C, AT AN AVERAGE RATE OF 114 LBS. PER SQ. YD. PER 1" DEPTH. TO BE PLACED IN LAYERS NOT LESS THAN 3" IN DEPTH OR GREATER THAN 5½" IN DEPTH.
C4	PROP. APPROX. 3" ASPHALT CONCRETE SURFACE COURSE, TYPE S9.5C, AT AN AVERAGE RATE OF 168 LBS. PER SQ. YD. IN EACH OF TWO LAYERS.	J1	PROP. 8" AGGREGATE BASE COURSE.
C5	PROP. VAR. DEPTH ASPHALT CONCRETE SURFACE COURSE, TYPE S9.5C, AT AN AVERAGE RATE OF 112 LBS. PER SQ. YD. PER 1" DEPTH. TO BE PLACED IN LAYERS NOT TO EXCEED 2" IN DEPTH.	P1	PRIME COAT AT A RATE OF 0.35 GAL. PER SQ. YD.
D1	PROP. APPROX. 2½" ASPHALT CONCRETE INTERMEDIATE COURSE, TYPE I19.0B, AT AN AVERAGE RATE OF 285 LBS. PER SQ. YD.	R1	8" X 18" CONCRETE CURB
D2	PROP. APPROX. 4" ASPHALT CONCRETE INTERMEDIATE COURSE, TYPE I19.0B, AT AN AVERAGE RATE OF 456 LBS. PER SQ. YD.	R2	1'-6" CONCRETE CURB AND GUTTER.
D3	PROP. VAR. DEPTH ASPHALT CONCRETE INTERMEDIATE COURSE, TYPE I19.0B, AT AN AVERAGE RATE OF 114 LBS. PER SQ. YD. PER 1" DEPTH, TO BE PLACED IN LAYERS NOT LESS THAN 2½" IN DEPTH OR GREATER THAN 4" IN DEPTH.	R3	2'-6" CONCRETE CURB AND GUTTER.
D4	PROP. APPROX. 2½" ASPHALT CONCRETE INTERMEDIATE COURSE, TYPE I19.0C, AT AN AVERAGE RATE OF 285 LBS. PER SQ. YD.	R4	EXPRESSWAY GUTTER.
D5	PROP. APPROX. 4" ASPHALT CONCRETE INTERMEDIATE COURSE, TYPE I19.0C, AT AN AVERAGE RATE OF 456 LBS. PER SQ. YD.	R5	5" MONOLITHIC CONCRETE ISLAND. (KEYED IN)
D6	PROP. VAR. DEPTH ASPHALT CONCRETE INTERMEDIATE COURSE, TYPE I19.0C, AT AN AVERAGE RATE OF 114 LBS. PER SQ. YD. PER 1" DEPTH, TO BE PLACED IN LAYERS NOT LESS THAN 2½" IN DEPTH OR GREATER THAN 4" IN DEPTH.	S	4" CONCRETE SIDEWALK.
E1	PROP. APPROX. 4" ASPHALT CONCRETE BASE COURSE, TYPE B25.0B, AT AN AVERAGE RATE OF 456 LBS. PER SQ. YD.	T	EARTH MATERIAL.
E2	PROP. APPROX. 4 1/2" ASPHALT CONCRETE BASE COURSE, TYPE B25.0B, AT AN AVERAGE RATE OF 513 LBS. PER SQ. YD.	U	EXISTING PAVEMENT.
E3	PROP. VAR. DEPTH ASPHALT CONCRETE BASE COURSE, TYPE B25.0B, AT AN AVERAGE RATE OF 114 LBS. PER SQ. YD. PER 1" DEPTH. TO BE PLACED IN LAYERS NOT LESS THAN 4" IN DEPTH OR GREATER THAN 5½" IN DEPTH.	V	MILLING BITUMINOUS PAVEMENT 2½".
E4	PROP. APPROX. 3" ASPHALT CONCRETE BASE COURSE, TYPE B25.0C, AT AN AVERAGE RATE OF 342 LBS. PER SQ. YD.	W	VARIABLE DEPTH ASPHALT PAVEMENT. (SEE STANDARD WEDGING DETAIL)

NOTE: PAVEMENT EDGE SLOPES ARE 1:1 UNLESS SHOWN OTHERWISE.

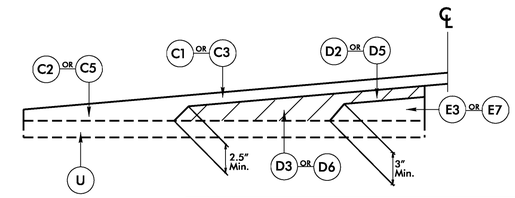

LINE	SURFACE				INTERMEDIATE				BASE	
	C1	C2	C3	C5	D2	D3	D5	D6	E3	E7
–L– (USE WITH TYP. SECTIONS 1, 2, 3, 5, 7, 8 & 10)			X	X			X	X		X
–Y6–, –Y7– & DRIVES (USE WITH TYP. SECTION 13)	X	X							X	
–Y10REV– (USE WITH TYP. SECTION 18)	X	X			X	X			X	
–Y17– (USE WITH TYP. SECTION 20)	X	X			X	X			X	

DETAIL 1 (METHOD OF WEDGING)

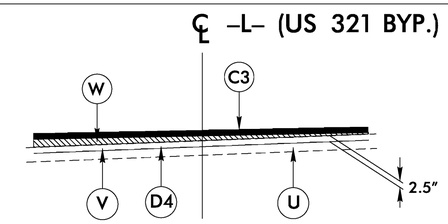

DETAIL 2 (MILLING OF EXISTING PAVEMENT)

TO BE USED IN CONJUNCTION WITH TYPICAL SECTIONS 1–3, 5, 7 8 & 11
MILL EXISTING –L– LINE PAVEMENT 2.5" AND REPLACE WITH I19.0C

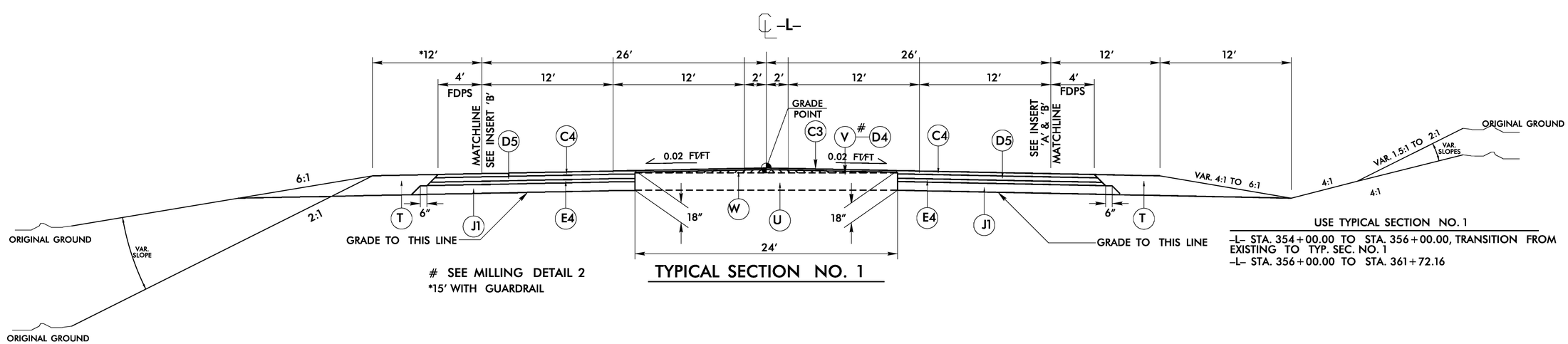

SEE MILLING DETAIL 2
*15' WITH GUARDRAIL

TYPICAL SECTION NO. 1

USE TYPICAL SECTION NO. 1
–L– STA. 354+00.00 TO STA. 356+00.00, TRANSITION FROM EXISTING TO TYP. SEC. NO. 1
–L– STA. 356+00.00 TO STA. 361+72.16

5/14/99

15-AUG-2011 09:07
R:\Roadway\proj\r2237c_rdy_typ.dgn
$$$$USERNAME$$$$

PROJECT REFERENCE NO.	SHEET NO.
R-2237C	2-A
R/W SHEET NO.	
ROADWAY DESIGN ENGINEER	PAVEMENT DESIGN ENGINEER

PVMT. SCHEDULE			
C3	1½" S9.5C	J1	8" ABC
C4	3" S9.5C	T	EARTH MATERIAL
D5	4" I19.0C	U	EXIST. PVMT.
E4	3" B25.0C	V	MILLING 2½"
E6	7" B25.0C	W	WEDGING

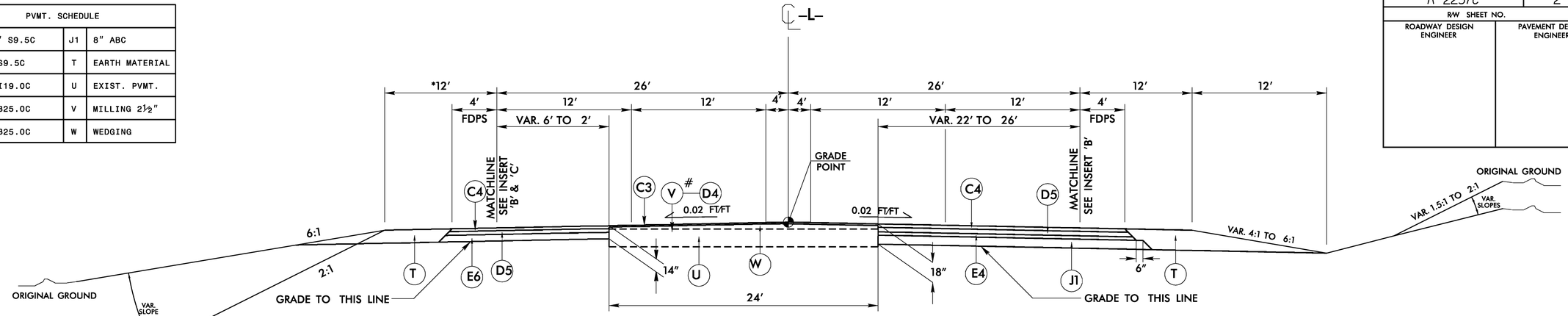

TYPICAL SECTION NO. 2

SEE MILLING DETAIL 2
*15' WITH GUARDRAIL

USE TYPICAL SECTION NO. 2

-L- FROM STA. 361+72.16 TO STA. 370+78.75
-L- FROM STA. 370+78.75 TO STA. 372+47.82
TRANSITION FROM TYP. SEC. NO. 2 TO TYP. SEC. NO. 3

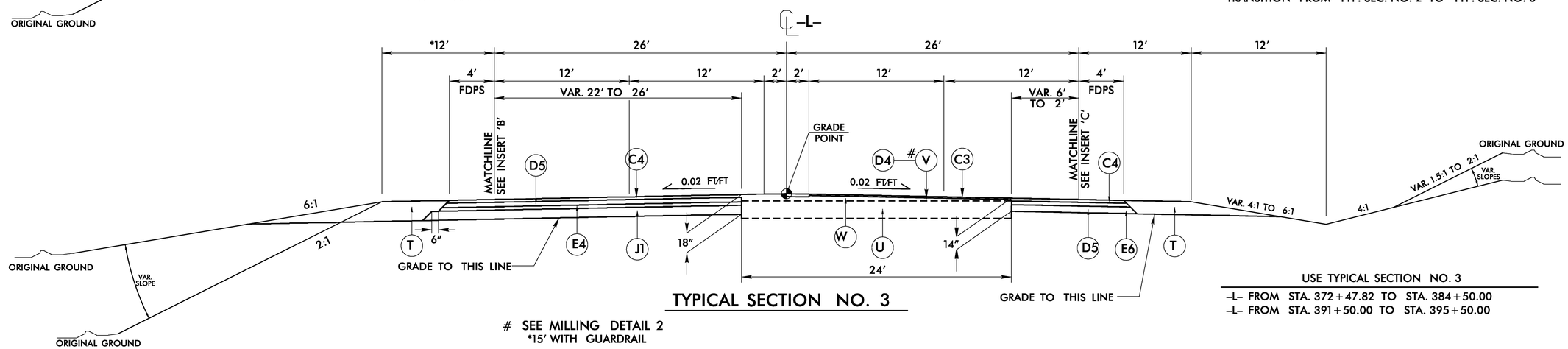

TYPICAL SECTION NO. 3

USE TYPICAL SECTION NO. 3

-L- FROM STA. 372+47.82 TO STA. 384+50.00
-L- FROM STA. 391+50.00 TO STA. 395+50.00

SEE MILLING DETAIL 2
*15' WITH GUARDRAIL

*15' WITH GUARDRAIL

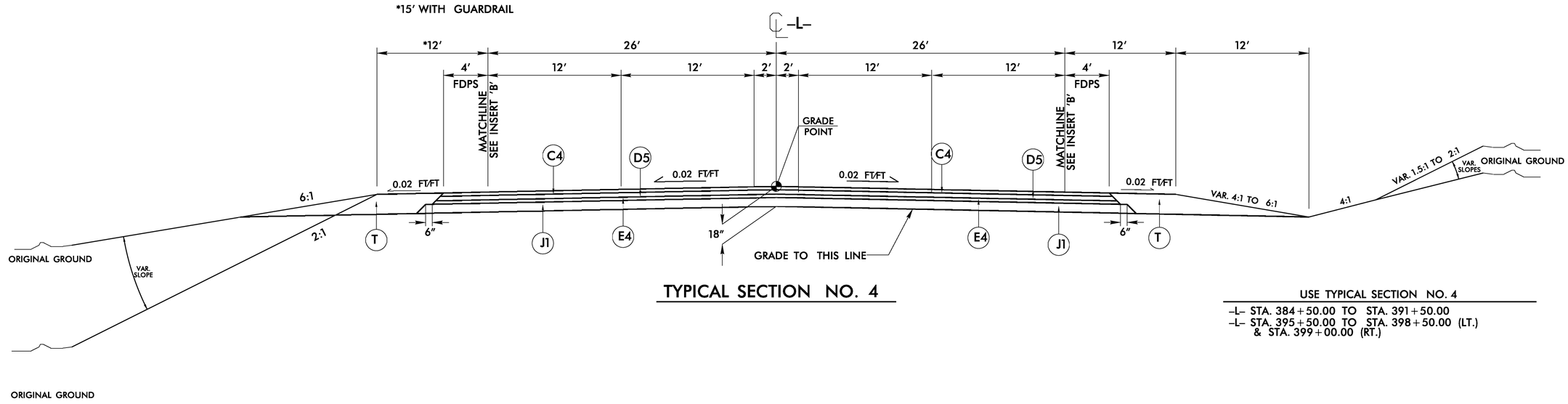

TYPICAL SECTION NO. 4

USE TYPICAL SECTION NO. 4

-L- STA. 384+50.00 TO STA. 391+50.00
-L- STA. 395+50.00 TO STA. 398+50.00 (LT.)
& STA. 399+00.00 (RT.)

5/14/99

15-AUG-2011 09:07
R:\Roadway\proj\r2237c_rdy_typ.dgn
$$$$USERNAME$$$$

PROJECT REFERENCE NO.	SHEET NO.
R-2237C	2-B
R/W SHEET NO.	
ROADWAY DESIGN ENGINEER	PAVEMENT DESIGN ENGINEER

PVMT. SCHEDULE			
C3	1½" S9.5C	R3	2' x 6" CURB
C4	3" S9.5C	S	4" SIDEWALK
D5	4" I19.0C	T	EARTH MATERIAL
E4	4" B25.0C	U	EXIST. PVMT.
E6	7" B25.0C	W	WEDGING
J1	8" ABC	V	MILLING 2½"

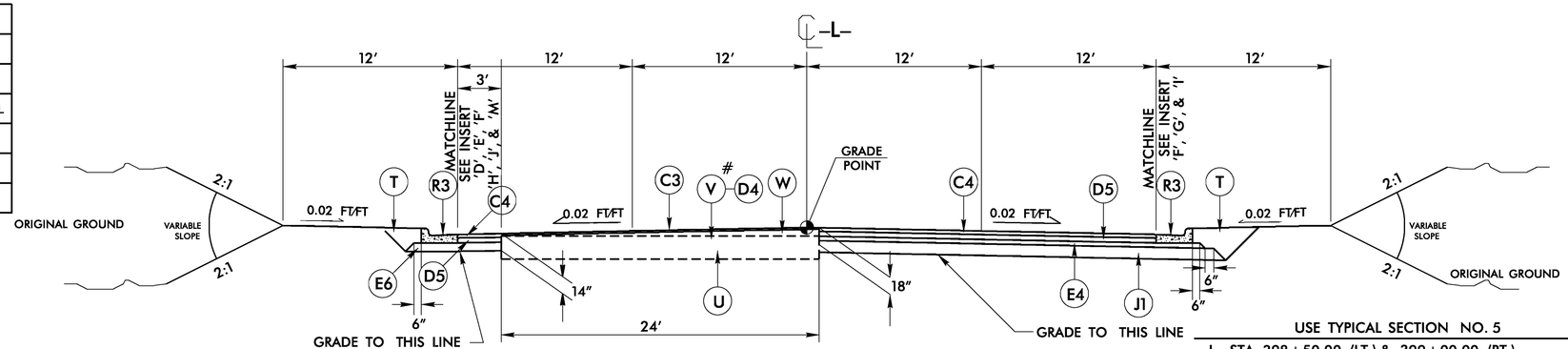

TYPICAL SECTION NO. 5

USE TYPICAL SECTION NO. 5

-L- STA. 398+50.00 (LT.) & 399+00.00 (RT.) TO STA. 442+57.33

-L- STA. 442+57.33 TO STA. 448+57.33, TRANSITION FROM T.S. NO. 5 TO T.S. NO. 6, (NOTE: BEGIN FULL DEPTH PAVEMENT AT STA. 446+51.71)

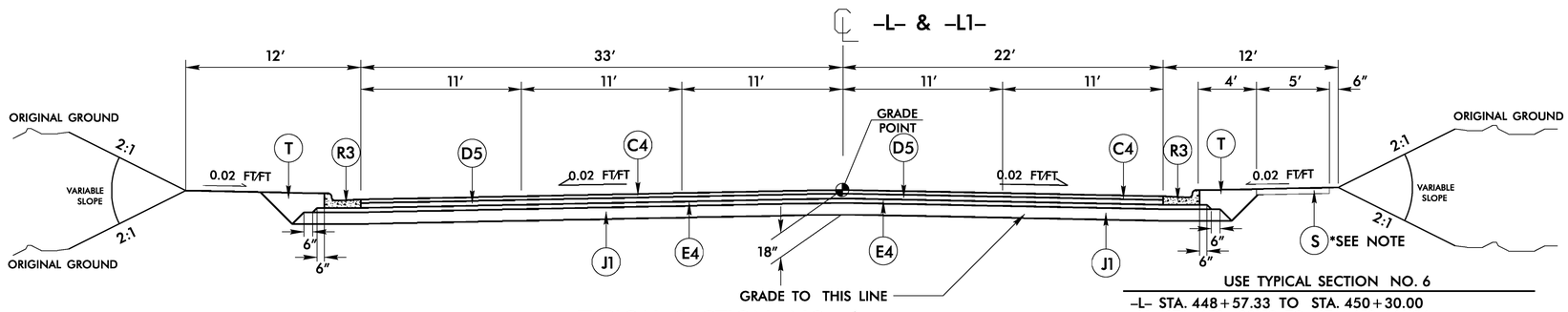

TYPICAL SECTION NO. 6

USE TYPICAL SECTION NO. 6

-L- STA. 448+57.33 TO STA. 450+30.00

-L1- STA. 450+30.00 TO STA. 453+46.04

-L1- STA. 453+46.04 TO STA. 459+46.04, TRANSITION T.S. NO. 6 TO T.S. NO. 7

*NOTE: BEGIN SIDEWALK RT. -L1- STA. 452+57.54

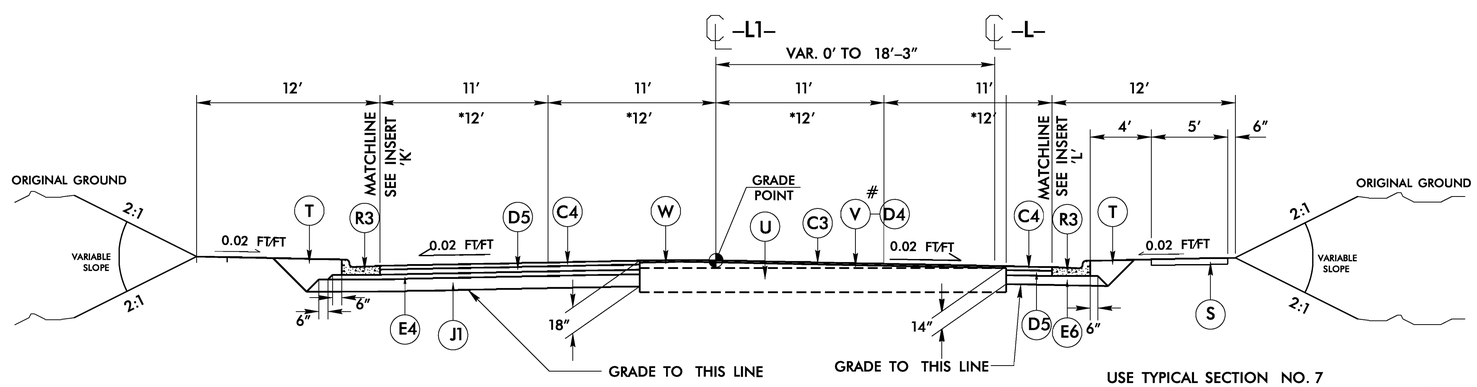

SEE MILLING DETAIL 2

TYPICAL SECTION NO. 7

USE TYPICAL SECTION NO. 7

-L1- FROM STA. 459+46.04 TO STA. 467+91.77

-L1- FROM STA. 467+91.77 TO STA. 468+91.77, TRANSITION FROM 11' LANES TO *12' LANES

*-L1- STA. 468+91.77 TO STA. 469+02.71

-L- STA. 469+10.94 TO STA. 470+50.00

5/14/99

15-AUG-2011 09:07
R:\Roadway\Proj\r2237c_rdy_typ.dgn
$$$$USERNAME$$$$

PROJECT REFERENCE NO.	SHEET NO.
R-2237C	2-C
R/W SHEET NO.	
ROADWAY DESIGN ENGINEER	PAVEMENT DESIGN ENGINEER

PVMT. SCHEDULE			
C3	1½" S9.5C	R3	2' x 6" CURB
C4	3" S9.5C	S	4" SIDEWALK
D5	4" I19.0C	T	EARTH MATERIAL
E4	3" B25.0C	U	EXIST. PVMT.
E6	7" B25.0C	V	MILLING 2½"
J1	8" ABC	W	WEDGING
R2	1' x 6" CURB		

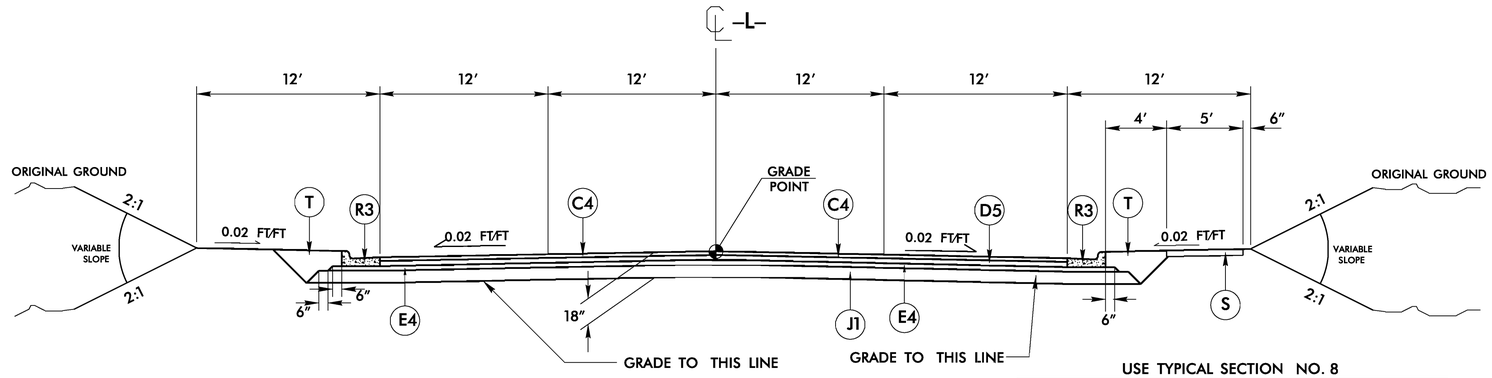

TYPICAL SECTION NO. 8

USE TYPICAL SECTION NO. 8
-L- STA. 470+50.00 TO STA. 484+02.24

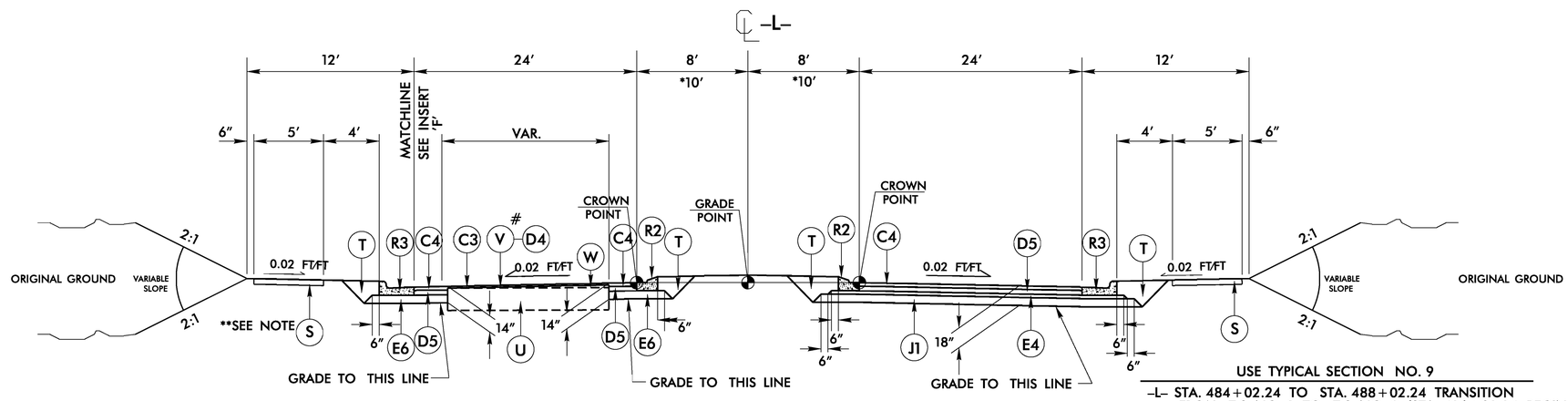

TYPICAL SECTION NO. 9

SEE MILLING DETAIL 2
NOTE: BEGIN SIDEWALK LT. -L- STA. 492+62.20

USE TYPICAL SECTION NO. 9
-L- STA. 484+02.24 TO STA. 488+02.24 TRANSITION
FROM T.S. NO. 8 TO T.S. NO. 9. (STA. 486+02.24 BEGIN MEDIAN)
-L- STA. 490+25.00 TO STA. 498+75.00
*-L- STA. 507+75.00 TO STA. 509+79.00
-L- STA. 509+79.00 TO STA. 515+79.00, TRANSITION
FROM 20' MEDIAN WIDTH TO 16' MEDIAN WIDTH.
-L- STA. 515+79.00 TO STA. 528+50.00
-L- STA. 535+00.00 TO STA. 556+27.00

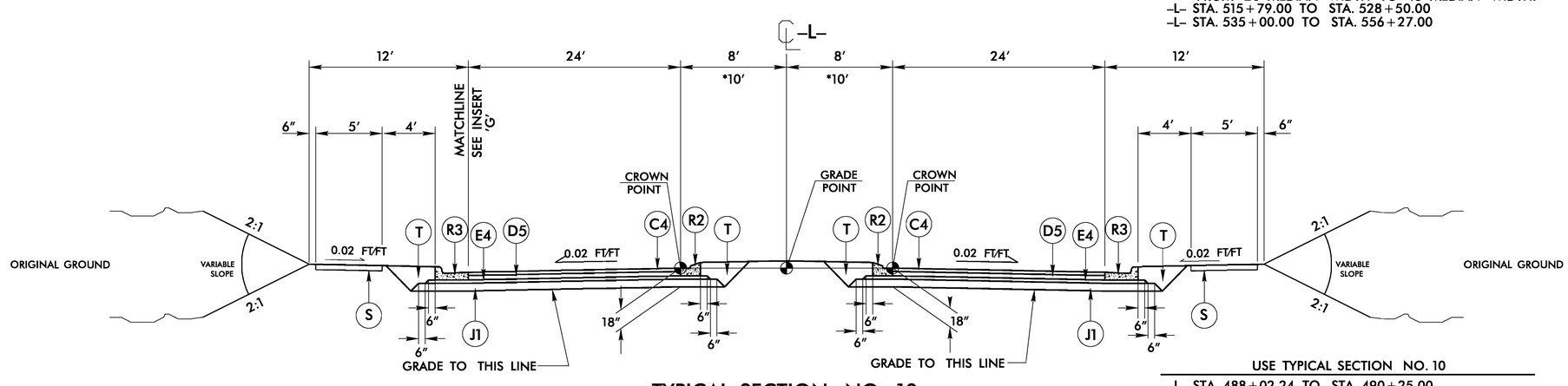

TYPICAL SECTION NO. 10

USE TYPICAL SECTION NO. 10
-L- STA. 488+02.24 TO STA. 490+25.00
-L- STA. 498+75.00 TO STA. 499+24.00
-L- STA. 499+24.00 TO STA. 505+24.00, TRANSITION
FROM 16' MEDIAN WIDTH TO 20' MEDIAN WIDTH.
*-L- STA. 505+24.00 TO STA. 507+75.00
-L- STA. 528+50.00 TO STA. 535+00.00

5/14/99

15-AUG-2011 09:07
R:\Roadway\Proj\r-2237c_rdy_typ.dgn
$$$$USERNAME$$$$

PROJECT REFERENCE NO.	SHEET NO.
R-2237C	2-D
R/W SHEET NO.	
ROADWAY DESIGN ENGINEER	PAVEMENT DESIGN ENGINEER

PVMT. SCHEDULE			
C1	3" S9.5B	R2	1' x 6" CURB
C3	1½" S9.5C	R3	2' x 6" CURB
C4	3" S9.5C	S	4" SIDEWALK
D5	4" I19.0C	T	EARTH MATERIAL
E1	4" B25.0B	W	EXIST. PVMT.
E4	3" B25.0C		MILLING 2½"
E6	7" B25.0C	W	WEDGING
J1	8" ABC		

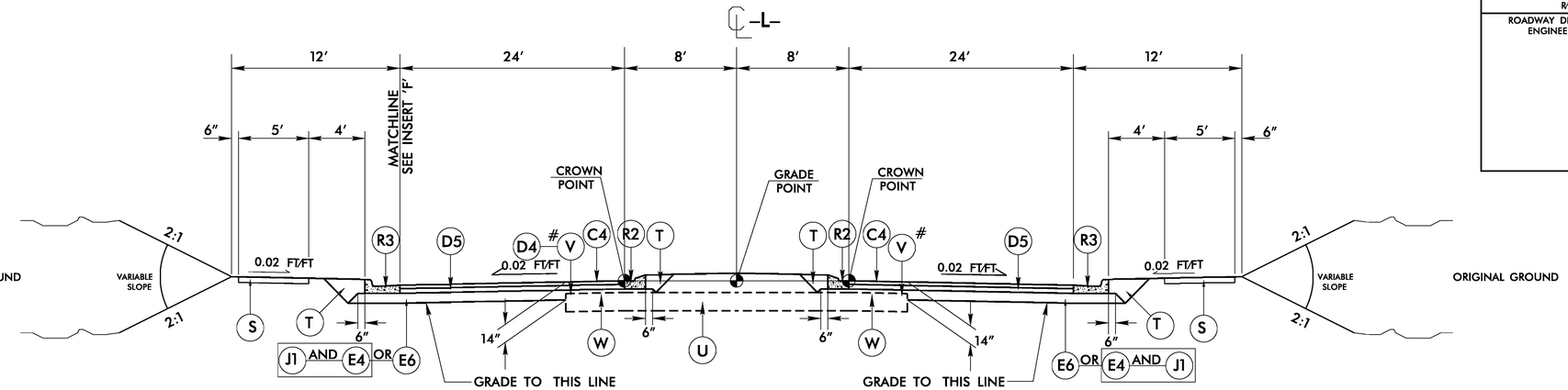

SEE MILLING DETAIL 2

TYPICAL SECTION NO. 11

USE TYPICAL SECTION NO. 11
-L- STA. 556+27.00 TO STA. 565+00.00
-L- STA. 565+00.00 TO STA. 569+00.00, TRANSITION FROM T.S. NO. 11 TO EXISTING

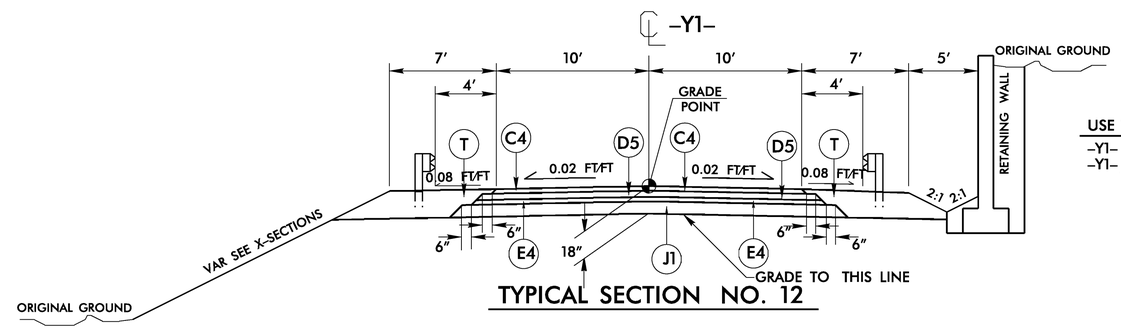

TYPICAL SECTION NO. 12

USE TYPICAL SECTION NO. 12
-Y1- STA. 10+97.42 TO STA. 11+50.00
-Y1- FROM STA. 11+50.00 TO STA. 11+94.28, TRANSITION FROM T.S. NO. 12 TO EXISTING

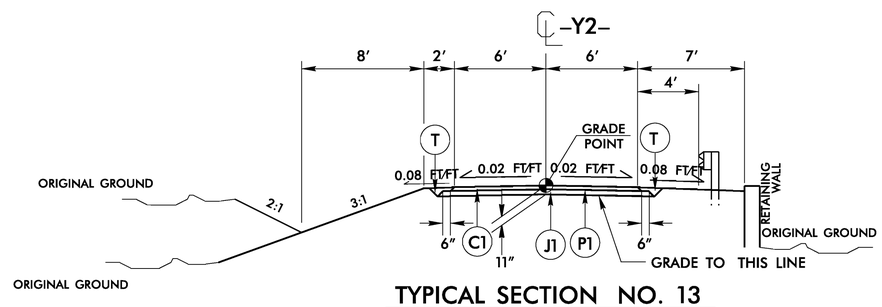

TYPICAL SECTION NO. 13

USE TYPICAL SECTION NO. 13
-Y2- STA. 10+68.86 TO STA. 12+00.00
-Y2- FROM STA. 12+00.00 TO STA. 12+80.00, TRANSITION FROM T.S. NO. 13 TO EXISTING

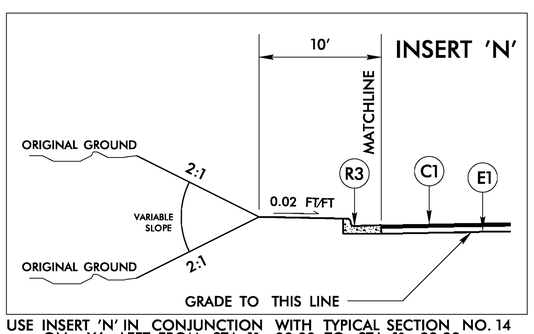

USE INSERT 'N' IN CONJUNCTION WITH TYPICAL SECTION NO. 14 ON -Y6- LEFT FROM STA. 11+00.00 TO STA. 11+22.22

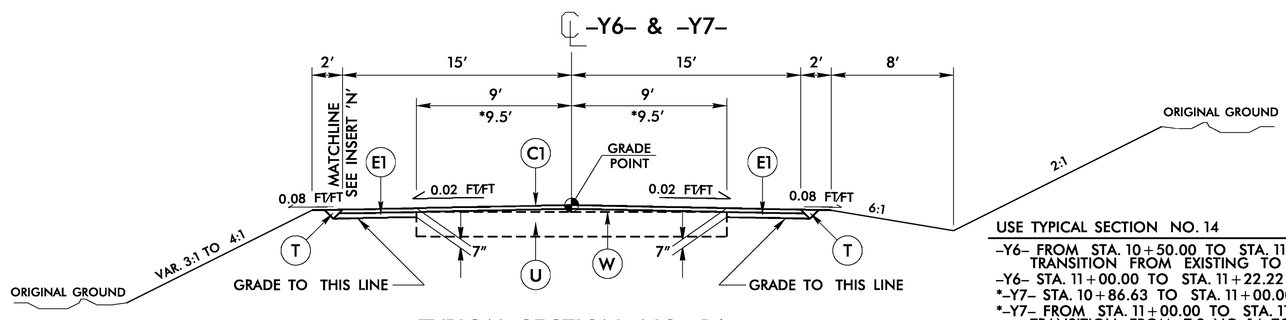

TYPICAL SECTION NO. 14

USE TYPICAL SECTION NO. 14
-Y6- FROM STA. 10+50.00 TO STA. 11+00.00, TRANSITION FROM EXISTING TO T.S. NO. 14
-Y6- STA. 11+00.00 TO STA. 11+22.22
*-Y7- STA. 10+86.63 TO STA. 11+00.00
*-Y7- FROM STA. 11+00.00 TO STA. 11+25.00, TRANSITION FROM T.S. NO. 14 TO EXISTING

5/14/99

15-AUG-2011 09:07
R:\Roadway\Proj\r-2237c_rdy_typ.dgn
$$$$USERNAME$$$$

PROJECT REFERENCE NO.	SHEET NO.
R-2237C	2-E
R/W SHEET NO.	
ROADWAY DESIGN ENGINEER	PAVEMENT DESIGN ENGINEER

PAVEMENT SCHEDULE			
C1	3" S9.5B	E4	3" B25.0C
C4	3" S9.5C	J1	8" ABC
D5	4" I19.0C	R3	2' x 6" CURB
E1	4" B25.0B	T	EARTH MATERIAL
E2	4 1/2" B25.0B		

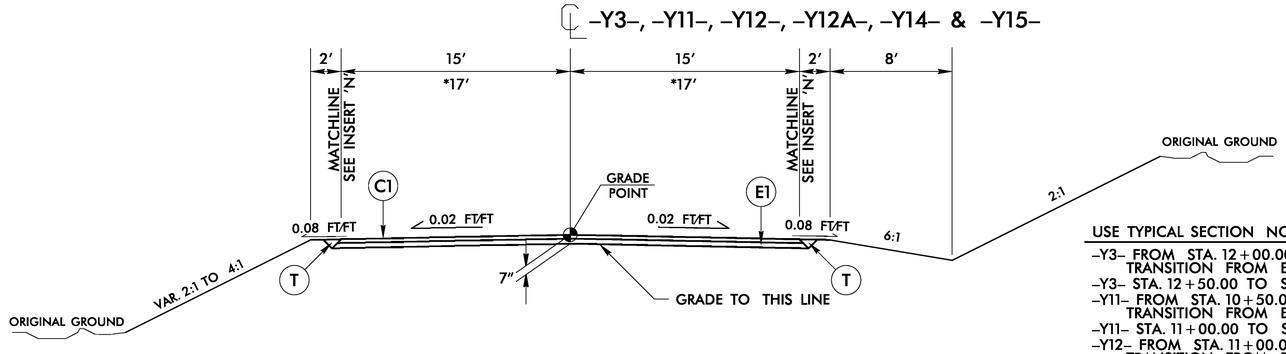

TYPICAL SECTION NO. 15

USE TYPICAL SECTION NO. 15

–Y3– FROM STA. 12+00.00 TO STA. 12+50.00, TRANSITION FROM EXISTING TO T.S. NO. 15
–Y3– STA. 12+50.00 TO STA. 13+53.53
–Y11– FROM STA. 10+50.00 TO STA. 11+00.00, TRANSITION FROM EXISTING TO T.S. NO. 15
–Y11– STA. 11+00.00 TO STA. 11+76.43
–Y12– FROM STA. 11+00.00 TO STA. 11+50.00, TRANSITION FROM EXISTING TO T.S. NO. 15
–Y12– STA. 11+50.00 TO STA. 11+62.79
–Y12A– STA. 10+66.49 TO STA. 11+16.49, TRANSITION FROM 30' PAVEMENT WIDTH TO 22' PAVEMENT WIDTH
–Y12A– STA. 11+16.49 TO STA, 11+66.52, USE 22' PAVEMENT WIDTH
–Y14– FROM STA. 10+50.00 TO STA. 11+00.00, TRANSITION FROM EXISTING TO T.S. NO. 15
–Y14– STA. 11+00.00 TO STA. 11+47.79
*–Y15– STA. 10+72.00 TO STA. 11+25.00
*–Y15– FROM STA. 11+25.00 TO STA. 11+75.00, TRANSITION FROM T.S. NO. 15 TO EXISTING

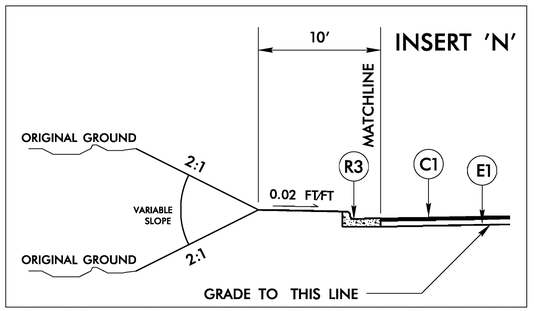

USE INSERT 'N' IN CONJUNCTION WITH TYPICAL SECTION NO. 15
LT. & RT. OF –Y12A– FROM STA. 10+66.49 TO STA. 11+66.52
RT. OF –Y14– FROM STA. 11+47.79 TO STA. 12+04.22
LT. OF –Y14– FROM STA. 11+00.00 TO STA. 11+47.79
LT. & RT. OF –Y15– FROM STA. 10+62.42 TO STA. 11+75.00

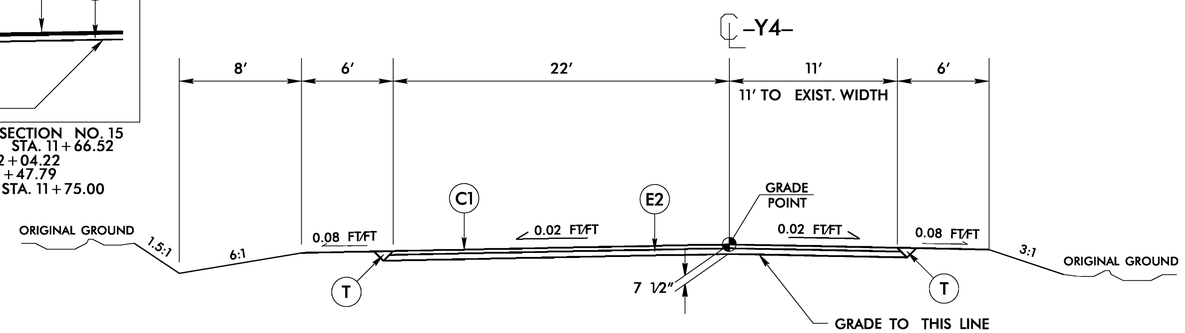

TYPICAL SECTION NO. 16

USE TYPICAL SECTION NO. 16

–Y4– FROM STA. 10+69.90 TO STA. 11+25.00, TRANSITION FROM T.S. NO. 16 TO EXISTING

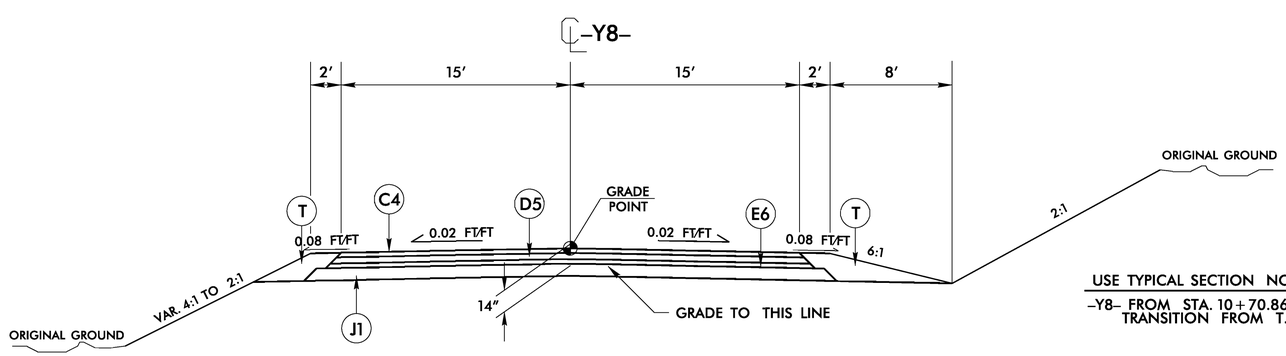

TYPICAL SECTION NO. 17

USE TYPICAL SECTION NO. 17

–Y8– FROM STA. 10+70.86 TO STA. 11+30.00, TRANSITION FROM T.S. NO. 17 TO EXISTING

5/14/99

15-AUG-2011 09:07
R:\Roadway\Proj\r-2237c_rdy_typ.dgn
$$$$USERNAME$$$$

PROJECT REFERENCE NO.	SHEET NO.
R-2237C	2-F
R/W SHEET NO.	
ROADWAY DESIGN ENGINEER	PAVEMENT DESIGN ENGINEER

PAVEMENT SCHEDULE			
C1	3" S9.5B	E4	3" B25.0C
C4	3" S9.5C	J1	8" ABC
D1	2 1/2" I19.0B	R3	2' x 6" CURB
D2	4" I19.0B	S	4" SIDEWALK
D5	4" I19.0C	T	EARTH MATERIAL
E1	4" B25.0B	U	EXIST. PVMT.
E2	4 1/2" B25.0B	W	WEDGING

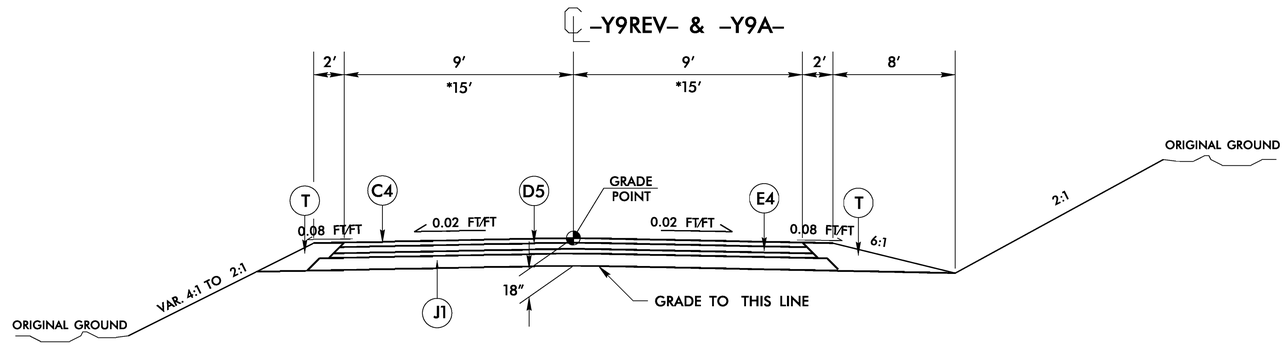

TYPICAL SECTION NO. 18

USE TYPICAL SECTION NO. 18

–Y9A– FROM STA. 10+50.00 TO STA. 11+30.87
–Y9A– FROM STA. 11+61.35 TO STA. 12+50.00
*–Y9REV– FROM STA. 10+32.49 TO STA. 11+21.82
–Y9REV– FROM STA. 11+40.11 TO STA. 11+76.95, TRANSITION FROM T.S. NO. 18 TO EXISTING

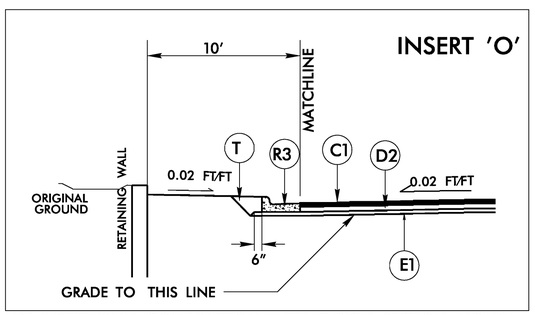

USE INSERT 'O' IN CONJUNCTION WITH TYPICAL SECTION NO. 19
–Y10REV– RT. FROM STA. 10+75.00 TO STA. 11+74.90

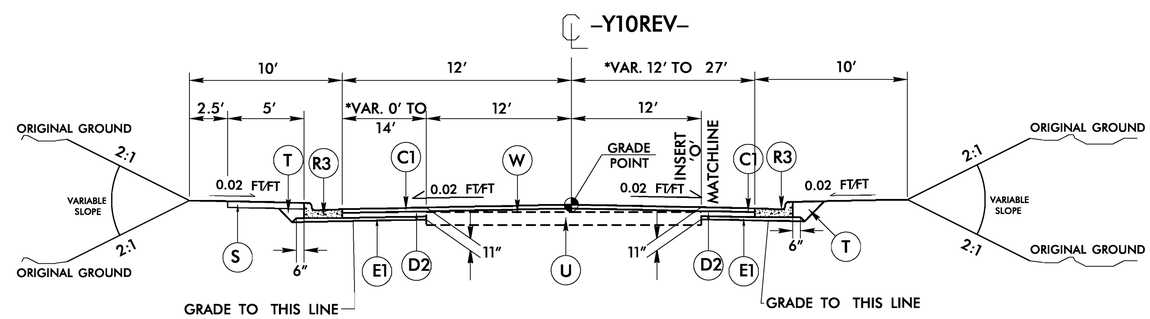

TYPICAL SECTION NO. 19

USE TYPICAL SECTION NO. 19

–Y10REV– FROM STA. 10+64.58 TO STA. 11+67.89
–Y10REV– STA. 11+67.89 TO STA. 12+25.00

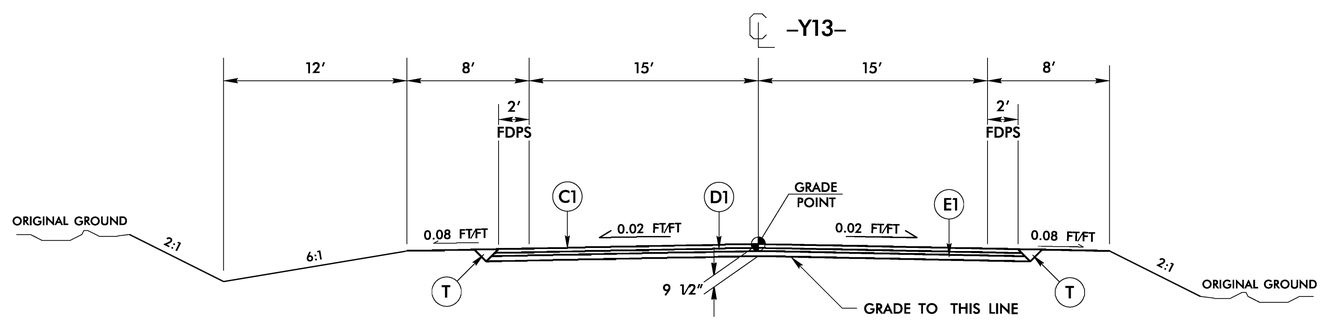

TYPICAL SECTION NO. 20

USE TYPICAL SECTION NO. 20

–Y13– FROM STA. 10+50.00 TO STA. 11+00.00, TRANSITION FROM EXISTING TO TYP. SEC. NO. 20
–Y13– STA. 11+00.00 TO 12+16.47

5/14/99

15-AUG-2011 09:07
R:\Roadway\Proj\r2237c_rdy_typ.dgn
$$$$USERNAME$$$$

PROJECT REFERENCE NO.	SHEET NO.
R-2237C	2-G
R/W SHEET NO.	
ROADWAY DESIGN ENGINEER	PAVEMENT DESIGN ENGINEER

PVMT. SCHEDULE	
C1	3" S9.5B
D2	4" I19.0B
E1	4" B25.0B
R3	2' x 6" CURB
R5	5" MONO. ISLAND
S	4" SIDEWALK
T	EARTH MATERIAL
U	EXIST. PVMT.
W	WEDGING

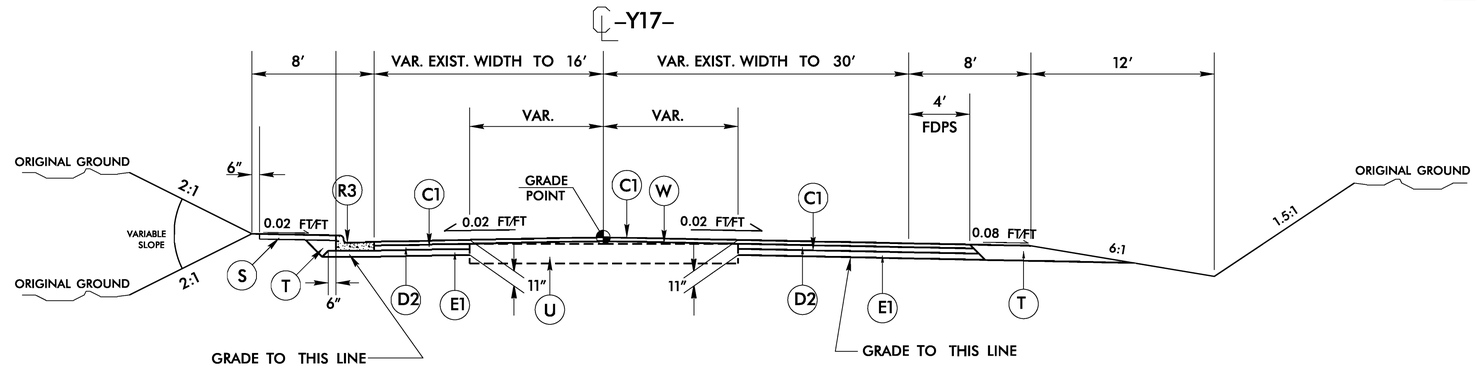

TYPICAL SECTION NO. 21

USE TYPICAL SECTION NO. 21
-Y17- FROM STA. 10+50.00 TO STA. 11+00.00,
TRANSITION FROM EXISTING TO TYP. SEC. NO. 21
-Y17- STA. 11+00.00 TO 13+00.00

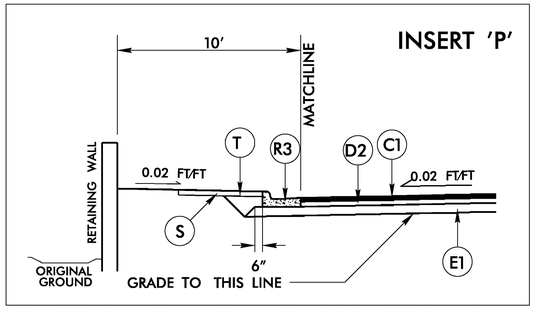

USE INSERT 'P' IN CONJUNCTION WITH TYPICAL SECTION NO. 22
-Y17- LEFT FROM STA. 13+00.00 TO STA. 15+04.04

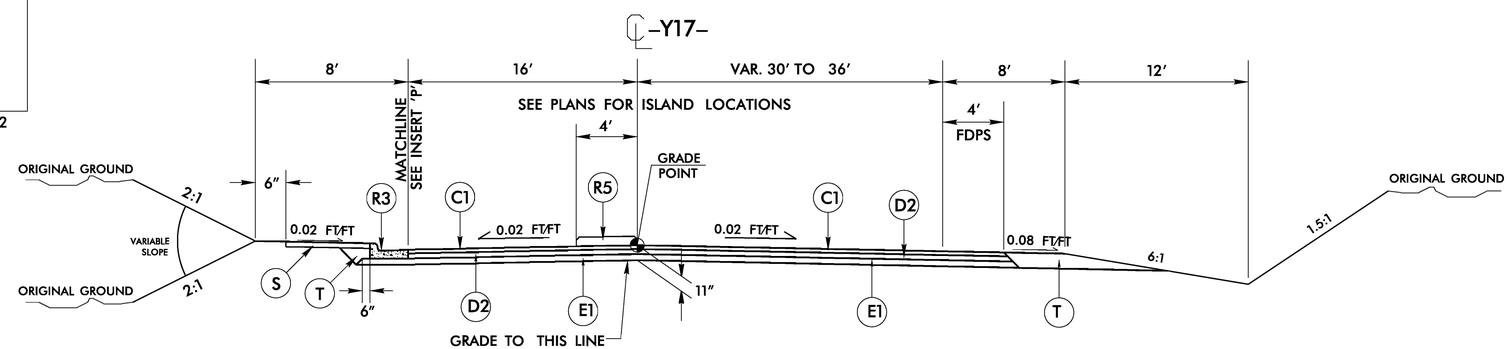

TYPICAL SECTION NO. 22

USE TYPICAL SECTION NO. 22
-Y17- STA. 13+00.00 TO 15+04.04

5/14/99

15-AUG-2011 09:07
R:\Roadway\proj\r2237c_rdy_typ.dgn
$$$$USERNAME$$$$

PROJECT REFERENCE NO.	SHEET NO.
R-2237C	2-H
R/W SHEET NO.	
ROADWAY DESIGN ENGINEER	PAVEMENT DESIGN ENGINEER

PVMT. SCHEDULE	
C1	3" S9.5B
E1	4" B25.0B
T	EARTH MATERIAL
U	EXIST. PVMT.
W	WEDGING

SHLDR WIDTH LT.					SHLDR WIDTH RT.			
1'	2'	5'	6'	LINE	1'	2'	5'	6'
X				-DRIVE- 1			X	
X				-DRIVES- 5, 6, & 10	X			
	X			-DRIVE- 7REV			X	
X				-DRIVE- 8		X		
	X			-DRIVE- 9			X	
			X	-DRIVE- 12				X

*-DRIVE10- VAR. 9' TO EXIST. WIDTH
**SEE CHART FOR SHLDR WIDTHS
***-DRIVE10- 4' DITCH WIDTH

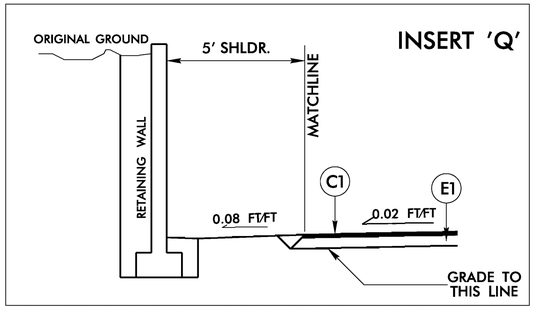

USE INSERT 'Q' IN CONJUNCTION WITH TYPICAL SECTION NO. 23
-DRIVE9- LEFT FROM STA. 10+39.02 TO STA. 11+63.30

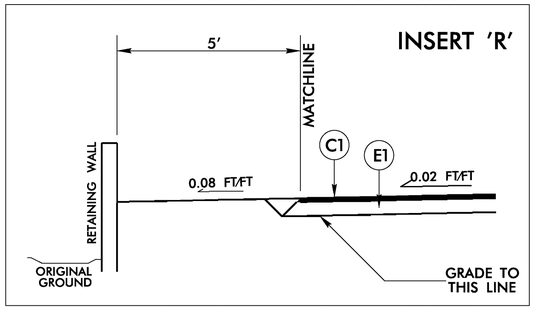

USE INSERT 'R' IN CONJUNCTION WITH TYPICAL SECTION NO. 23
-DRIVE1- RIGHT FROM STA. 10+63.25 TO STA. 11+65.00

-DRIVES- 1, 5, 6, 7REV, 8, 9, 10 & 12

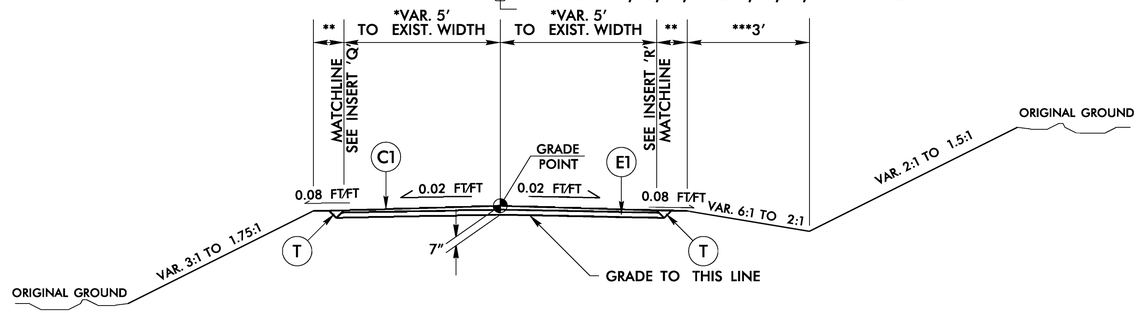

TYPICAL SECTION NO. 23

USE TYPICAL SECTION NO. 23

-DRIVE1- STA. 10+63.25 TO 11+40.00
-DRIVE1- FROM STA. 11+40.00 TO STA. 11+90.00, TRANSITION FROM TYP. SEC. NO. 23 TO EXISTING
-DRIVE5- FROM STA. 10+20.00 TO STA. 10+70.00, TRANSITION FROM EXISTING TO TYP. SEC. NO. 23
-DRIVE5- STA. 10+70.00 TO 11+00.68
-DRIVE6- FROM STA. 10+20.00 TO STA. 10+70.00, TRANSITION FROM EXISTING TO TYP. SEC. NO. 23
-DRIVE6- STA. 10+70.00 TO 11+17.15
-DRIVE7REV- FROM STA. 10+25.00 TO STA. 10+75.00, TRANSITION FROM EXISTING TO TYP. SEC. NO. 23
-DRIVE7REV- STA. 10+75.00 TO 12+50.00
-DRIVE7REV- FROM STA. 12+50.00 TO STA. 13+00.00, TRANSITION FROM TYP. SEC. NO. 23 TO EXISTING
-DRIVE8- FROM STA. 11+00.00 TO STA. 11+50.00, TRANSITION FROM EXISTING TO TYP. SEC. NO. 23
-DRIVE8- STA. 11+50.00 TO 12+49.37
-DRIVE9- STA. 10+39.02 TO 11+11.30
-DRIVE9- FROM STA. 11+11.30 TO STA. 11+61.30, TRANSITION FROM TYP. SEC. NO. 23 TO EXISTING
-DRIVE10- FROM STA. 10+90.00 TO STA. 10+70.00, TRANSITION FROM EXISTING TO TYP. SEC. NO. 23
-DRIVE10- STA. 10+70.00 TO 10+49.63
-DRIVE12- STA. 10+38.16 TO 11+27.78
-DRIVE12- FROM STA. 11+27.78 TO STA. 11+77.78, TRANSITION FROM TYP. SEC. NO. 23 TO EXISTING

*-DRIVE11- VAR. 8' TO EXIST. WIDTH
**-DRIVE11- VAR. SHLDR. RT. & 6' SHLDR. (WITH GUARDRAIL) LT.

-DRIVES- 2 & 11

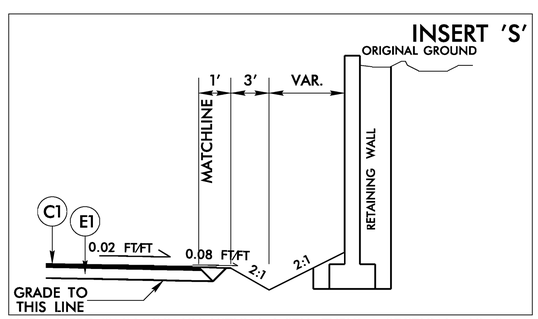

USE INSERT 'S' IN CONJUNCTION WITH TYPICAL SECTION NO. 24
-DRIVE2- RIGHT FROM STA. 11+15.00 TO STA. 11+45.00

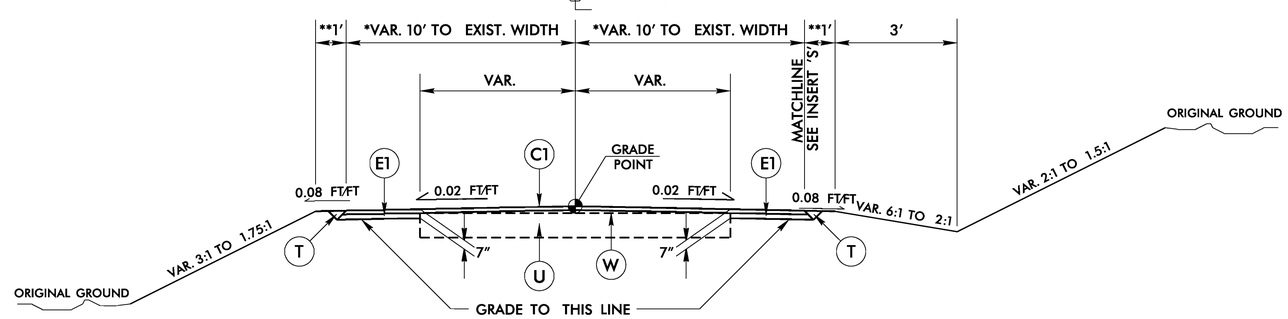

TYPICAL SECTION NO. 24

USE TYPICAL SECTION NO. 24

-DRIVE2- STA. 11+16.20 TO 11+40.00
-DRIVE2- FROM STA. 11+40.00 TO STA. 11+70.00, TRANSITION FROM TYP. SEC. NO. 24 TO EXISTING
-DRIVE11- RT. STA. 10+76.34 TO 11+00.00
-DRIVE11- RT. FROM STA. 11+00.00 TO STA. 11+20.00, TRANSITION FROM EXISTING TO TYP. SEC. NO. 24
-DRIVE11- LT. STA. 10+42.38 (-L- 485+20.00) TO 10+94.66

5/14/99
15-AUG-2011 09:07
R:\Roadway\Proj\r2237c_rdy_typ.dgn
$$$$USERNAME$$$$

PROJECT REFERENCE NO.	SHEET NO.
R-2237C	2-1
R/W SHEET NO.	
ROADWAY DESIGN ENGINEER	PAVEMENT DESIGN ENGINEER

PVMT. SCHEDULE	
C1	3" S9.5B
C3	3" S9.5C
E1	4" B25.0B
E5	5" B25.0C
R3	2' x 6" CURB
U	EXIST. PVMT.
W	WEDGING

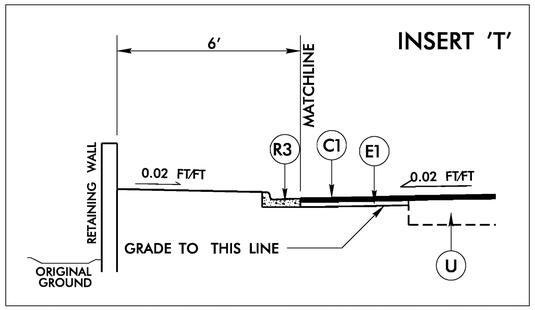

USE INSERT 'T' IN CONJUNCTION WITH TYPICAL SECTION NO. 25
-DRIVE3- LEFT FROM STA. 10+80.00 TO STA. 11+15.39

*-DRIVE4- VAR. 8' TO EXIST. WIDTH

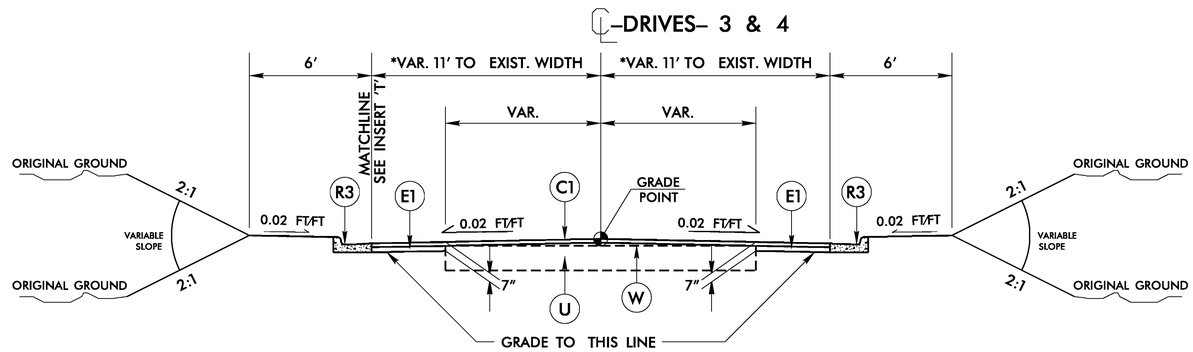

TYPICAL SECTION NO. 25

USE TYPICAL SECTION NO. 25

-DRIVE3- FROM STA. 10+70.00 TO STA. 10+90.00, TRANSITION FROM EXISTING TO TYP. SEC. NO. 25
-DRIVE3- STA. 10+90.00 TO 11+15.39
-DRIVE4- FROM STA. 10+50.00 TO STA. 10+70.00, TRANSITION FROM EXISTING TO TYP. SEC. NO. 25
-DRIVE4- STA. 10+70.00 TO 10+90.51

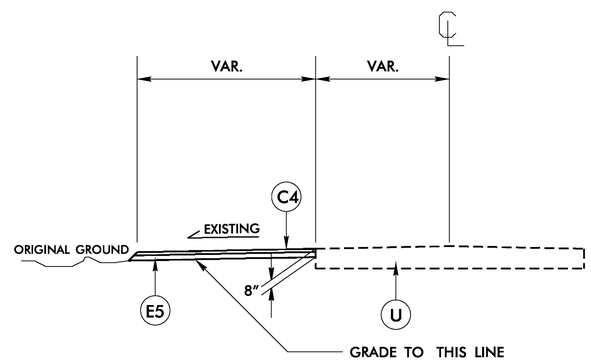

TYPICAL SECTION NO. 26

USE TYPICAL SECTION NO. 26

(SEE TRAFFIC CONTROL PLANS FOR WIDTH AT THE FOLLOWING LOCATIONS)
-L- RT. - FROM STA. 385+50.00 TO STA. 390+50.00, (SEE TMP-5)
-L- LT. - FROM STA. 395+50.00 TO STA. 397+00.00, (SEE TMP-5)
-L- LT. - FROM STA. 402+50.00 TO STA. 406+50.00, (SEE TMP-5)
-L- LT. - FROM STA. 410+50.00 TO STA. 417+00.00, (SEE TMP-6)
-L- LT. - FROM STA. 422+50.00 TO STA. 440+50.00, (SEE TMP-6)
-L- LT. - FROM STA. 445+50.00 TO STA. 453+50.00, (SEE TMP-6)
-L- LT. - FROM STA. 459+50.00 TO STA. 470+00.00, (SEE TMP-7)
-L- LT. - FROM STA. 472+00.00 TO STA. 476+50.00, (SEE TMP-7)
-L- LT. - FROM STA. 478+50.00 TO STA. 461+93.00, (SEE TMP-7)
-L- LT. - FROM STA. 483+50.00 TO STA. 486+50.00, (SEE TMP-8)
-L- LT. - FROM STA. 490+50.00 TO STA. 504+00.00, (SEE TMP-8)
-L- LT. - FROM STA. 528+00.00 TO STA. 536+00.00, (SEE TMP-9)
-L- LT. - FROM STA. 544+50.00 TO STA. 555+50.00, (SEE TMP-10)
-Y17- RT. - FROM STA. 11+00.00 TO STA. 15+50.00, (SEE TMP-10)
-L- RT. - FROM STA. 422+00.00 TO STA. 427+00.00, (SEE TMP-13)
-L- RT. - FROM STA. 459+00.00 TO STA. 470+00.00, (SEE TMP-14)

5/14/99
15-AUG-2011 09:07
R:\Roadway\proj\r-2237c_rdy_typ.dgn

PROJECT REFERENCE NO.	SHEET NO.
R-2611	2-J
ROADWAY DESIGN ENGINEER	PAVEMENT DESIGN ENGINEER

PVMT. SCHEDULE			
C3	1½" S9.5C	R3	2' x 6" CURB
C4	3" S9.5C	R4	EXPRESS GUTTER
D5	4" I19.0C	S	4" SIDEWALK
E4	4" B25.0C	T	EARTH MATERIAL
E6	7" B25.0C		
J1	8" ABC		

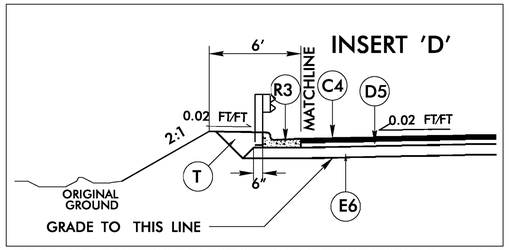

USE INSERT 'D' IN CONJUNCTION WITH TYPICAL SECTION NO. 5
-L- LT. FROM STA. 398+50.00 TO 401+50.00
-L- LT. FROM STA. 406+00.00 TO 407+00.00
-L- LT. FROM STA. 413+50.00 TO 419+00.00
-L- LT. FROM STA. 420+50.00 TO 423+50.00
-L- LT. FROM STA. 426+50.00 TO 436+50.00
-L- LT. FROM STA. 440+00.00 TO 441+00.00
-L- LT. FROM STA. 443+00.00 TO 443+25.00

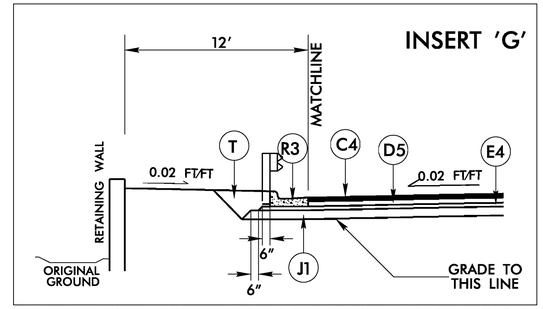

USE INSERT 'G' IN CONJUNCTION WITH TYPICAL SECTION NO. 5 & 10
-L- RT. FROM STA. 408+30.00 TO STA. 413+51.96
-L- RT. FROM STA. 414+10.00 TO STA. 415+45.00
-L- RT. FROM STA. 418+85.00 TO STA. 421+75.00
-L- RT. FROM STA. 422+15.00 TO STA. 422+70.00
-L- RT. FROM STA. 428+25.00 TO STA. 428+95.00
-L- RT. FROM STA. 429+65.00 TO STA. 435+90.00
-L- RT. FROM STA. 437+70.00 TO STA. 442+00.00
-L- RT. FROM STA. 449+85.00 TO STA. 451+41.28
-L- LT. FROM STA. 472+40.00 TO STA. 473+80.00
-L- LT. FROM STA. 479+30.00 TO STA. 482+10.00
-L- LT. FROM STA. 483+40.00 TO STA. 484+15.00
-L- LT. FROM STA. 502+98.81 TO STA. 506+00.00

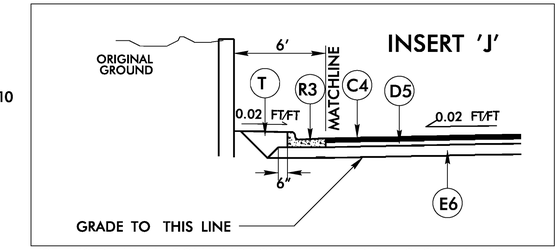

USE INSERT 'J' IN CONJUNCTION WITH TYPICAL SECTION NO. 5
-L- LT. FROM STA. 423+50.00 TO 426+00.00

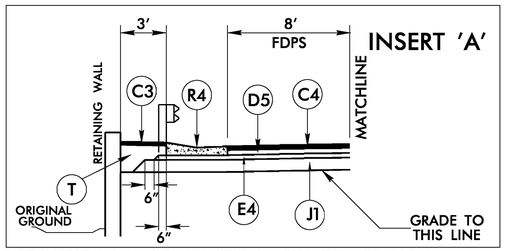

USE INSERT 'A' IN CONJUNCTION WITH TYP. SEC NO. 1
-L- RT. STA. 357+75.00 TO 358+70.00

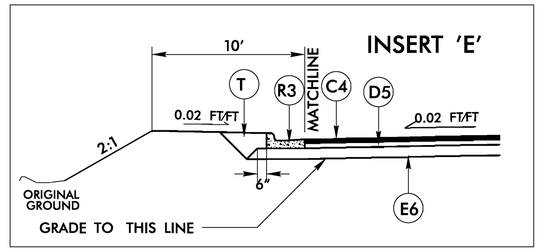

USE INSERT 'E' IN CONJUNCTION WITH TYPICAL SECTION NO. 5
-L- LT. FROM STA. 402+00.00 TO 402+85.00
-L- LT. FROM STA. 407+50.00 TO 413+00.00
-L- LT. FROM STA. 419+50.00 TO 420+00.00
-L- LT. FROM STA. 438+50.00 TO 439+50.00
-L- LT. FROM STA. 441+50.00 TO 442+50.00
-L- LT. FROM STA. 445+95.00 TO 447+50.00

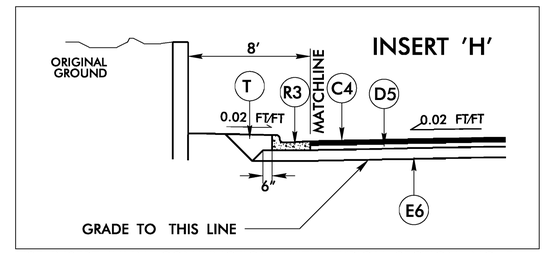

USE INSERT 'H' IN CONJUNCTION WITH TYPICAL SECTION NO. 5
-L- LT. FROM STA. 436+60.00 TO 438+35.00

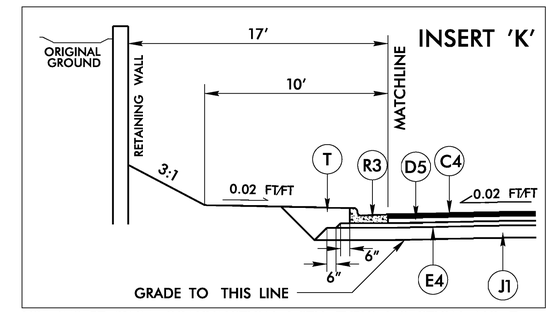

USE INSERT 'K' IN CONJUNCTION WITH TYPICAL SECTION NO. 7
-L1- LT. FROM STA. 458+00.14 TO STA. 465+10.00

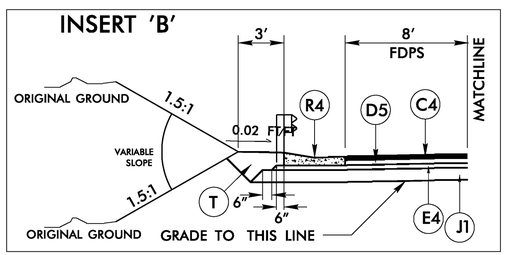

USE INSERT 'B' IN CONJUNCTION WITH TYP. SEC NOS. 1, 2, 3 & 4
-L- RT. STA. 354+00.00 TO 356+90.00
-L- LT. STA. 356+00.00 TO 356+50.00
-L- LT. STA. 357+76.25 TO 361+72.16
-L- RT. STA. 358+70.00 TO 372+47.82
-L- LT. STA. 370+78.75 TO 372+00.00
-L- LT. STA. 374+50.00 TO 379+50.00
-L- LT. STA. 381+00.00 TO 386+93.06
-L- RT. STA. 384+50.00 TO 391+50.00
-L- LT. STA. 387+65.46 TO 388+50.00
-L- LT. STA. 392+00.00 TO 395+50.00
-L- RT. STA. 395+50.00 TO 397+50.00

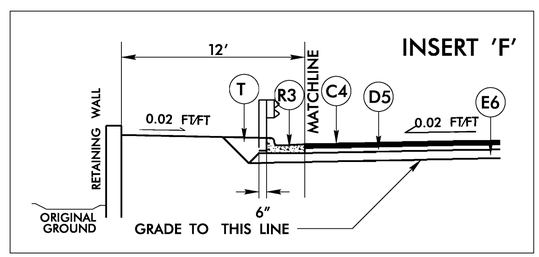

USE INSERT 'F' IN CONJUNCTION WITH TYPICAL SECTION NO. 5, 9 & 11
-L- LT. STA. 402+85.00 TO 405+00.00
-L- RT. STA. 423+80.00 TO 425+15.00
-L- LT. STA. 484+15.00 TO 485+20.00
-L- LT. STA. 539+50.00 TO 543+50.00
-L- LT. STA. 545+50.00 TO 547+20.00
-L- LT. STA. 560+80.00 TO 562+30.00

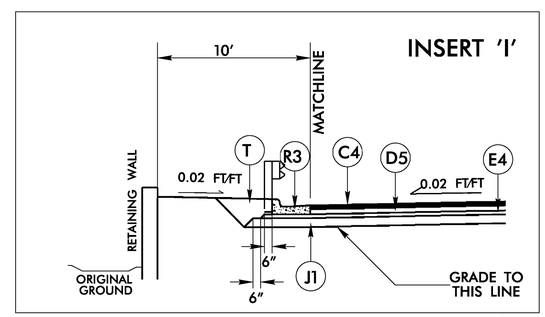

USE INSERT 'I' IN CONJUNCTION WITH TYPICAL SECTION NO. 5
-L- RT. FROM STA. 407+95.00 TO STA. 408+25.00

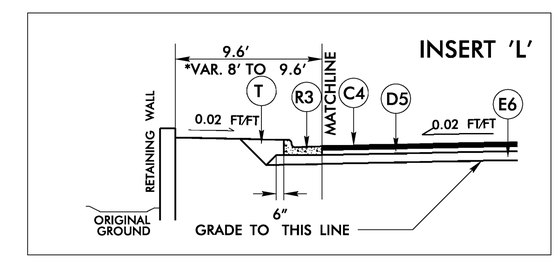

USE INSERT 'L' IN CONJUNCTION WITH TYPICAL SECTION NO. 7
-L1- RT. STA. 459+50.00 TO 460+00.00
-L1- RT. STA. 460+00.00 TO 465+90.00

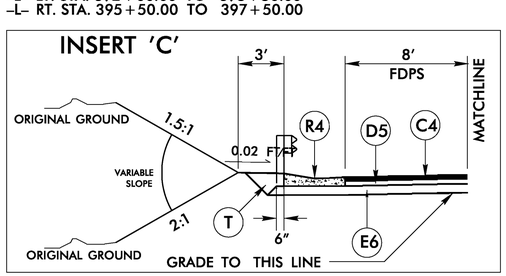

USE INSERT 'C' IN CONJUNCTION WITH TYP. SEC NO. 2 & 3
-L- LT. STA. 361+72.16 TO 364+70.00
-L- LT. STA. 365+65.00 TO 370+78.75
-L- RT. STA. 372+47.82 TO 374+50.00
-L- RT. STA. 379+50.00 TO 381+50.00
-L- RT. STA. 384+00.00 TO 384+50.00

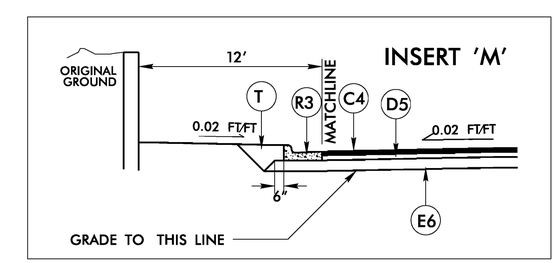

USE INSERT 'M' IN CONJUNCTION WITH TYPICAL SECTION NO. 5
-L- LT. FROM STA. 443+25.00 TO 445+95.00

6/2/99

15-AUG-2011 09:08
R:\Roadway\Proj\r2237c_rdy_typ.dgn
$$$$USERNAME$$$$