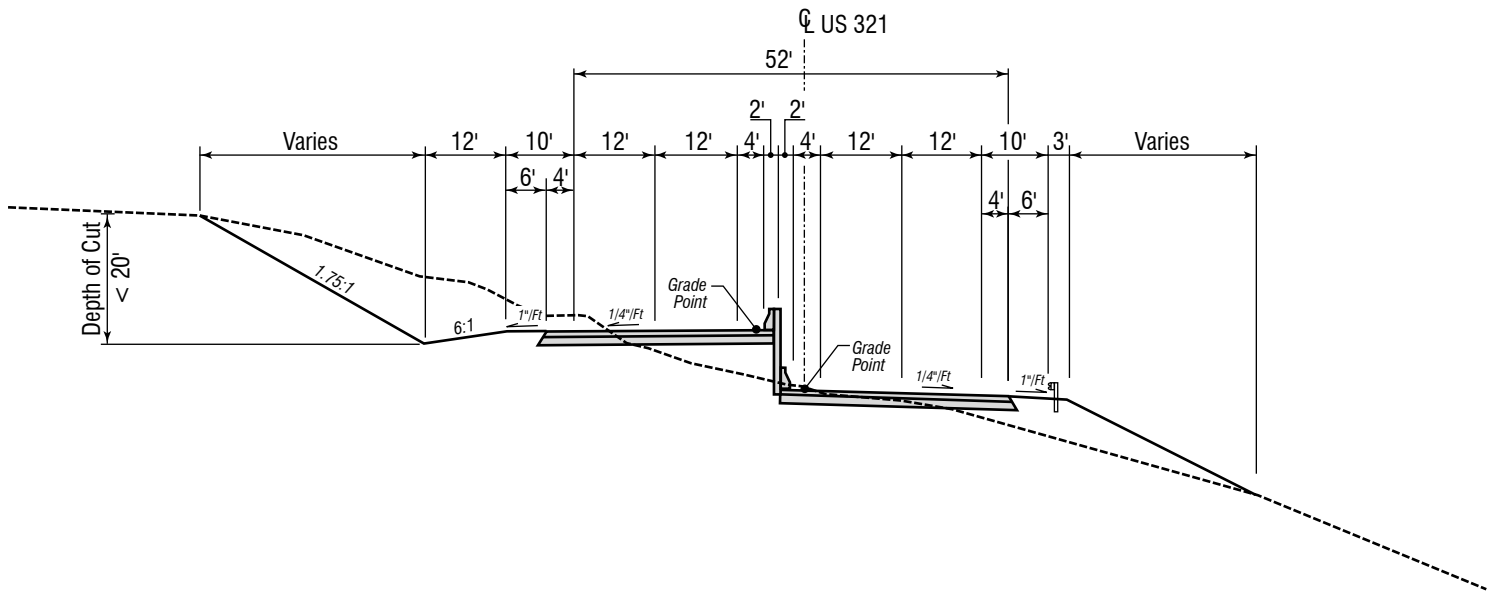

Figure 2-15

Bifurcation Typical Cross Section