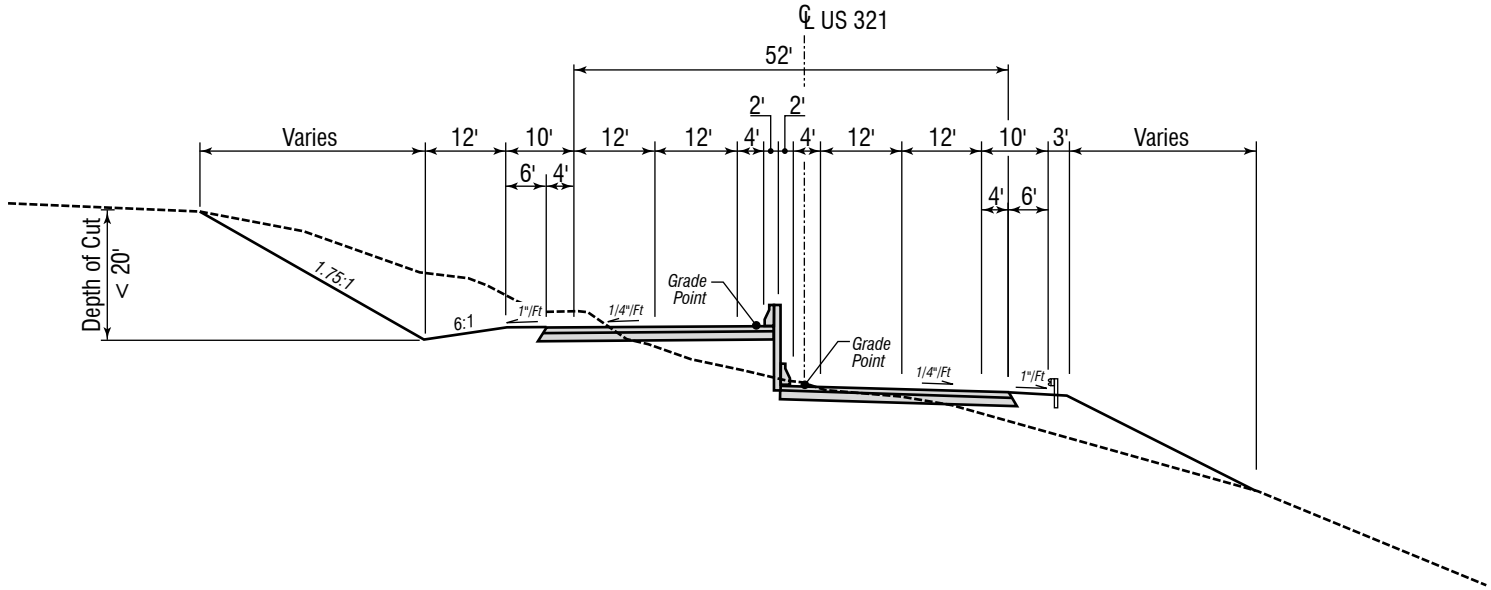

Figure 2-20

Bifurcation Typical Cross Section