GARDEN PARKWAY-EAST (TIP U-3321C&DA)

INDUSTRY DRAFT REQUEST FOR PROPOSALS: VOLUME II

February 23, 2012

VOID FOR BIDDING

DATE AND TIME OF TECHNICAL AND PRICE PROPOSAL SUBMISSION: at 4:00 PM

DATE AND TIME OF PRICE PROPOSAL OPENING: at 2:00 PM

CONTRACT ID: C202697

WBS ELEMENT NO.: 34922.5.TA1

COUNTY: Gaston and Mecklenburg

ROUTE: Garden Parkway-East

MILES: 9.5 (20.9 for ITS)

LOCATION: From West of SR 2428 (Wilson Farm Road) to I-485

TYPE OF WORK: DESIGN-BUILD SERVICE AS SPECIFIED IN THE SCOPE OF WORK CONTAINED IN THE REQUEST FOR PROPOSAL (Volume II)

NOTICE:

ALL PROPOSERS SHALL COMPLY WITH ALL APPLICABLE LAWS REGULATING THE PRACTICE OF GENERAL CONTRACTING AS CONTAINED IN CHAPTER 87 OF THE GENERAL STATUTES OF NORTH CAROLINA WHICH REQUIRES THE PROPOSER TO BE LICENSED BY THE N.C. LICENSING BOARD FOR CONTRACTORS WHEN BIDDING ON ANY NON-FEDERAL AID PROJECT WHERE THE BID IS $30,000 OR MORE, EXCEPT FOR CERTAIN SPECIALTY WORK AS DETERMINED BY THE LICENSING BOARD. PROPOSERS SHALL ALSO COMPLY WITH ALL OTHER APPLICABLE LAWS REGULATING THE PRACTICES OF ELECTRICAL, PLUMBING, HEATING AND AIR CONDITIONING AND REFRIGERATION CONTRACTING AS CONTAINED IN CHAPTER 87 OF THE GENERAL STATUTES OF NORTH CAROLINA. NOT WITHSTANDING THESE LIMITATIONS ON BIDDING, THE PROPOSER WHO IS AWARDED ANY PROJECT SHALL COMPLY WITH CHAPTER 87 OF THE GENERAL STATUTES OF NORTH CAROLINA FOR LICENSING REQUIREMENTS WITHIN 60 CALENDAR DAYS OF BID OPENING, REGARDLESS OF FUNDING SOURCES.

_____ 5% BID BOND OR BID DEPOSIT REQUIRED

_____

PROPOSAL FORM FOR THE CONSTRUCTION OF CONTRACT NO. C202697

IN GASTON AND MECKLENBURG COUNTIES, NORTH CAROLINA

Date_____ 20_____

THE DEPARTMENT OF TRANSPORTATION,
NORTH CAROLINA TURNPIKE AUTHORITY

RALEIGH, NORTH CAROLINA

The Design-Build Team herein acknowledges that it has carefully examined the location of the proposed work to be known as Contract No. C202697, has carefully examined the Final Request for Proposals (RFP) and all addendums thereto, specifications, special provisions, the form of contract, and the forms of contract payment bond and contract performance bonds, which are acknowledged to be part of the Contract; and thoroughly understands the stipulations, requirements and provisions. The undersigned Design-Build Team agrees to be bound upon their execution of the Contract and including any subsequent award to them by the Secretary of Transportation in accordance with this Contract to provide the necessary contract payment bond and contract performance bond within fourteen calendar days after the written solicitation of said bonds is received by them.

The undersigned Design-Build Team further agrees to provide all necessary materials, machinery, implements, appliances, tools, labor, and other means of construction, except as otherwise noted, to perform all the work and required labor to design, construct and complete all the work necessary for State Highway Contract No. C202697 in Gaston and Mecklenburg Counties by no later than the dates(s) specified in the Final RFP or Technical Proposal, whichever is earlier, and in accordance with the requirements of the Contract Documents, including the Technical Proposal prepared by the Design-Build Team. The Design-Build Team further agrees that the work required in these Contract Documents will be performed at the lump sum price(s) bid by the Design-Build Team in their Price Proposal.

The Design-Build Team shall provide signed and sealed documents prepared by the Design-Build Team, which specifications and plans show the details covering this project and adhere to the items noted above.

The Design-Build Team acknowledges that project documents furnished by the Department and the Authority are preliminary and provided solely to assist the Design-Build Team in the development of the project design. Unless otherwise noted herein, the Department and the Authority do not warrant or guarantee the sufficiency or accuracy of any information furnished by the Department or the Authority.

The Department and the Authority do not warrant or guarantee the sufficiency or accuracy of any investigations made, nor the interpretations made or opinions of the Department or the Authority as to the type of materials and conditions to be encountered at the project site. The Design-Build Team is advised to make such independent investigations, as they deem necessary to satisfy their self as to conditions to be encountered on this project. The Design-Build Team shall have no claim for additional compensation or for an extension of contract time for any reason resulting from the actual conditions encountered at the site differing from those indicated in any of the information or documents furnished by the Department and the Authority except as may be allowed under the provisions of the Standard Specifications.

Although the Authority has furnished preliminary designs for this project, unless otherwise noted herein, the Design-Build Team shall assume full responsibility, including liability, for the project design, including the use of portions of the Authority's design, modification of such design, or other designs as may be submitted by the Design-Build Team.

The Design-Build Team shall be fully and totally responsible for the accuracy and completeness of all work performed under this contract, and shall indemnify and hold the Department and the Authority harmless for any additional costs and all claims against the Department, Authority, or the State which may arise due to errors or omissions of the Department and Authority in furnishing the preliminary project designs and information, and of the Design-Build Team in performing the work.

The published volume entitled *North Carolina Department of Transportation, Raleigh, Standard Specifications for Roads and Structures*, *January 2012,* as well as, all design manuals, policy and procedures manuals, and AASHTO publications and guidelines referenced in the Request For Proposals, with all amendments and supplements thereto, are by reference, incorporated and made part of this contract; that, except as herein modified, all the design, construction and Construction Engineering Inspection included in this contract is to be done in accordance with the documents noted above and under the direction of the Engineer, and as to the extent provided in the Contract Documents.

If the Design-Build Proposal is accepted and the award is made, the Technical Proposal submitted by the Design-Build Team is by reference, incorporated and made part of this contract. The contract is valid only when signed either by the Contract Officer or such other person as may be designated by the Secretary to sign for the Department of Transportation. The conditions and provisions herein cannot be changed except by written approval as allowed by the Request for Proposals.

Accompanying the Design-Build Proposal shall be a bid bond secured by a corporate surety, or certified check payable to the order of the Department of Transportation, for five percent of the total bid price, which deposit is to be forfeited as liquidated damages in case this bid is accepted and the Design-Build Team shall fail to provide the required payment and performance bonds with the Department of Transportation, under the condition of this proposal, within 14 calendar days after the solicitation of said bonds is received by them, as provided in the Contract Documents; otherwise said deposit will be returned to the Design-Build Team.

TO BE SEALED IN FINAL RFP	TO BE SEALED IN FINAL RFP
NCTA Director of Construction	*NCTA Chief Engineer*

TABLE OF CONTENTS

COVER SHEET

PROPOSAL SHEETS

PROJECT SPECIAL PROVISIONS (GREEN SHEETS) *PAGE NO.*

Definitions 1
Notices to Proceed 1
Contract Time and Liquidated Damages 2
Proposal Validity Period 3
Schedule and Cost Relief Due to Delay 4
Termination of Contract 5
Substantial Completion Bonus 5
Other Liquidated Damages and Incentives 6
Cost-Loaded Critical Path Method Project Schedule 7
Mobilization 8
Substantial Completion 8
Fuel Price Adjustments 9
Partnering 9
FAA Notification of Construction 10
Value Analysis 10
Schedule of Estimated Completion Progress 10
Revision to FHWA-1273 Concerning Personal Information on Payroll Submissions 11
Disadvantaged Business Enterprise 11
Certification for Federal-Aid Contracts 16
Contractor's License Requirements 16
U. S. Department of Transportation Hotline 16
Subsurface Information 17
Cooperation Between Contractors 17
Price Proposal Documentation 18
Dispute Review Board (DRB) 19
Three-Year Guarantee 29
Clearing and Grubbing 46
Erosion & Sediment Control / Storm Water Certification 47
Waste Reduction Initiatives 53
Procedure for Monitoring Borrow Pit Discharge 54
Burning Restrictions 55
Building and Appurtenance Removal / Demolition 56
Reinforced Concrete Pipe Design 56
Drainage Pipe 57
Cement and Lime Stabilization of Sub-Grade Soils 58
Price Adjustments for Asphalt Binder 61
Price Adjustments - Asphalt Concrete Plant Mix 62
Rock Blasting 62

Use of Electronic Design Files 66
Design References 67
Review of Design Submittals 67
Design Quality Control Plan 68
Project Management Internet Communication Requirements 71
Design, Construction & CEI Work Performed by Design-Build Team 71
Ethics Policy 72
Approval of Personnel 72
Project Safety Plan 73
Overhead Sign Supports 74
Overhead and Dynamic Message Sign Foundations 80
High Mount Foundations 82
Foundations and Anchor Rod Assemblies for Metal Poles 84
Epoxy Pavement Marking Material 89
Construction Noise Abatement 93
Federal Energy Regulatory Commission (FERC) Approval 94
Employment 95
Material Transfer Vehicle 95
Intelligent Compaction 95
Risk Management Workshop 99

SCOPES OF WORK (GREEN SHEETS)

Roadway 100
Structures 112
Pavement Management 116
Hydraulics 121
Geotechnical Engineering 123
Traffic Management 132
Pavement Markings 146
Signing 148
Signals 153
Environmental Permits 155
Railroad Coordination 161
Erosion and Sedimentation Control 165
Intelligent Transportation System (ITS) 177
Lighting 296
All-Electronic Tolling (AET) Toll Zone 298
Utilities Coordination 308
Right of Way 313
Construction Engineering & Inspection 317
Utility Construction 324
Aesthetic Design 333
Public Information 337

STANDARD SPECIAL PROVISIONS (YELLOW SHEETS)

Locating Existing Utilities 339
Plant and Pest Quarantines....339
Gifts from Vendors and Contractors 340
Bridge Approach Fills....340
Preparation of Subgrade and Base 342
Asphalt Binder Content of Asphalt Plant Mixes 342
Asphalt Plant Mixtures 343
Final Surface Testing – Asphalt Pavements 343
Aggregate Gradation for Coarse Aggregate 344
Tying Proposed Concrete Pavement to Existing Concrete Pavement 345
Tying Proposed Asphalt Pavement to Existing Concrete Pavement 345
Diamond Grinding Concrete Pavement 345
Subsurface Drainage 346
Guardrail Anchor Units, Type M-350 347
Guardrail Anchor Units, Type 350 348
Impact Attenuator Units, Type 350 349
Preformed Scour Hole with Level Spreader Apron 350
Street Signs and Markers and Route Markers....351
Temporary Shoring 352
Coordination of Lighting Work 362
On-the-Job Training....363
International Roughness Index (IRI) 365
Availability of Funds – Termination of Contracts 366
NCDOT General Seed Specifications for Seed Quality 367
Errata....370
Award of Contract....371
Minority and Female Employment Requirements 373
Required Contract Provisions Federal-Aid Construction Contracts 375
General Decision NC120090 NC90....385
Division One 389

PROPOSAL FORMS - ITEMIZED SHEET, ETC.

Itemized Proposal Sheet (WHITE SHEET)
Fuel Usage Factor Chart and Estimate of Quantities (WHITE SHEET)
Listing of DBE Subcontractors (YELLOW SHEETS)
Execution of Bid, Non-Collusion Affidavit, Debarment Certification and Gift Ban Certification (YELLOW SHEETS)
Signature Sheet (YELLOW SHEET)

*** PROJECT SPECIAL PROVISIONS ***

DEFINITIONS

Definitions that apply to the entire RFP are contained in Article 101-3 of 2012 *Standard Specifications for Roads and Structures* and as modified in the Standard Special Provision entitled "Division One". Definitions that apply to a specific provision, or reference thereto, are contained in the Project Special Provisions for (1) "Disadvantaged Business Enterprise" by reference to the Instructions to Proposers (Volume I); (2) "Dispute Review Board;" (3) "Three-Year Guarantee;" and (4) "Rock Blasting," as well as Article 108-2 of the Standard Special Provision entitled "Division One."

In addition, the terms Department of Transportation, Department, and NCDOT are synonymous and are defined so as to include the North Carolina Turnpike Authority as described in Article 6H of Chapter 136 of the North Carolina General Statutes and transferred to the Department of Transportation pursuant to G.S. 136-89.182(b). Therefore, throughout these Contract Documents the terms Department and NCTA are fully interchangeable.

NOTICES TO PROCEED

Predicated on the availability of funding for the full design phase of the project, the Authority will issue a written Limited Notice to Proceed for preconstruction activities (design and investigative work) to the Design-Build Team immediately upon execution of the Contract in accordance with the Project Special Provision, "Proposal Validity Period". The issuance of this Limited Notice to Proceed will allow the Design-Build Team to begin work on the project design and other preconstruction activities. Therefore, this Limited Notice to Proceed is anticipated to include authorization to perform investigative borings, surveys, and other field testing as may be necessary to complete the project design. Any design or other preconstruction activities performed prior to the issuance of the Limited Notice to Proceed shall be at the sole risk and expense of the Design-Build Team.

Once Financial Close is reached and full funding is in place, the Authority will issue a written Unlimited Notice to Proceed to the Design-Build Team for all remaining project activities. An Unlimited Notice to Proceed will not be issued by the Authority until such time as the project is fully funded. The Financial Closing Date for full funding is anticipated to be twelve weeks after the opening of the Price Proposals. Therefore the issuance of the Unlimited Notice to Proceed is anticipated to be issued within 16 weeks after the opening of the Price Proposals.

The Design-Build Team shall not begin construction mobilization, materials procurement, ground disturbing activities (other than properly authorized geotechnical investigations), utility relocations, or any non-design related activities prior to the Unlimited Notice to Proceed. Any such activities performed prior to the issuance of the Unlimited Notice to Proceed shall be at the sole risk and expense of the Design-Build Team.

CONTRACT TIME AND LIQUIDATED DAMAGES

The Design-Build Team shall begin performance of the Work as directed in the Notices to Proceed, and shall thereafter perform the Work in accordance with the cost-loaded Critical Path Method Project Schedule (CPM), so as to achieve timely completion of the Project.

Regardless of the issuance of any Notice to Proceed, no physical work in jurisdictional waters and / or wetlands shall begin until a meeting between the Department, applicable Regulatory Agencies, and the Design-Build Team is held and appropriate permits are obtained in accordance with the Contract Documents.

The Date of Availability for this contract will be the date of contract execution by the NCTA.

When observation periods are required by the Contract Documents, the observation periods are not a part of the Work to be completed by the completion dates and/or intermediate contract times. Should an observation period extend beyond the Final Completion Date either (1), the performance and payment bonds shall remain in full force and effect until the observations have been completed and the Work has been accepted or (2) the Warranty Bond required in the Project Special Provision, "Three-Year Guarantee" shall clearly cover the observation periods.

The Substantial Completion Date for the Project is defined as the Substantial Completion Date proposed in the Technical Proposal by the Proposer who is awarded the contract. The Substantial Completion date thus proposed shall be no later than December 31, 2015. Subject to any time extensions approved in writing by the Authority, the Proposer shall be liable for liquidated damages in the amount of Twenty Five Thousand Dollars ($20,000.00) per calendar day for each day of delay in achieving Substantial Completion.

The Final Completion Date for the Project is defined as the Final Completion Date proposed in the Technical Proposal by the Proposer who is awarded the contract. The Final Completion date thus proposed shall be no later than July 1, 2016. Subject to any time extensions approved in writing by the Authority, the Proposer will be liable for liquidated damages in the amount of Ten Thousand Dollars ($7,500.00) per calendar day for each day of delay in achieving Final Completion.

The Substantial Completion Date and Final Completion Date proposed by the Design-build Team in their Technical Proposal shall assume that the Issuance of the Unlimited Notice to Proceed will occur within the timeframe noted in the Notices to Proceed Project Special Provision. By execution and submission of a Price Proposal, the Design-Build Team acknowledges that it has carefully reviewed and understands the interdependence among all scopes of work, and in particular the Environmental Permits and Right-of-Way Scopes of Work, Financial Close, right-of-way acquisition, design, permitting and construction activities.

By execution and submission of a Price Proposal, the Design-Build Team agrees and acknowledges that such liquidated damages, including those for Erosion Control, are reasonable in order to compensate the Authority and the Department for damages they will incur as a result of delays in achieving Substantial Completion and Final Completion. Such damages include, without limitation, (1) loss of revenue for the Authority due to late service commencement, (2) loss of use, enjoyment and benefit of the Project and connecting transportation facilities by the

general public, (3) additional oversight and administrative costs, (4) debt service costs, and (5) injury to the credibility and reputation of the Authority's transportation improvement program with policy makers and with the general public who depend on and expect availability of service by the planned Completion Dates, which injury to credibility and reputation may directly result in loss of ridership on the Project and connecting transportation facilities, and further loss of revenue and/or toll revenues. The Design-Build Team further agrees and acknowledges that these liquidated damages are incapable of accurate measurement at the time of Contract execution because of, among other things, the unique nature of the Project and the unavailability of a substitute.

It should be noted that the cost of debt service on any Department/Authority issued debt can be quantified as a verifiable cost. Additionally, loss of toll revenue can be determined based on certified Traffic and Revenue Studies performed as part of the project financing. The aforementioned liquidated damages do not fully compensate the Authority/Department for these losses should liquidated damages be assessed.

PROPOSAL VALIDITY PERIOD

Provided the Authority does not elect to pursue a Best and Final Offer, the Department intends to issue a Notice of Award to the Design-Build Team with the lowest Adjusted Price. This Notice of Award will solicit the submission of contract payment and contract performance bonds.

After the determination of the Design-Build Team with the apparent low adjusted bid, but prior to Contract execution, and at the Design-Build Team's own risk, the Design-Build Team may elect to further the design of the project. If requested in writing by the Design-Build Team, the Department will review these design submittals. Any such request must acknowledge that the Design-Build Team is not expecting compensation for said design submittals, related meetings, or re-submittals until the first partial payment following Contract Execution.

The Design-Build Team agrees, as evidenced by submission of the Technical Proposal and Price Proposal, to remain bound to all terms, conditions, requirements, and technical components of the RFP, the Technical Proposal, and Price Proposal until 120 days after the latest submission of the Technical Proposal and Price Proposal.

If necessary, this 120 day period may be extended if mutually agreeable by the NCTA and the Design-Build Team. Otherwise, the Design-Build Team may withdraw their Price Proposal in accordance with Article 103-4(A) of the 2012 *Standard Specifications for Roads and Structures* and as amended in the Standard Special Provision entitled "Division One".

In the event that the Authority elects to proceed with a Best and Final Offer (BAFO), written notification of this election will be provided within 60 days of the Opening of Price Proposals. Upon such written notification, the Department will release the surety from the obligations of the bid bond submitted with the original Price Proposal. However, a new bid bond conforming to the requirements of the Contract Documents will be required with the Design-Build Team's Price Proposal, and if applicable their revised Technical Proposal, that is submitted to the Department in response to the Best and Final Offer Request for Proposals.

SCHEDULE AND COST RELIEF DUE TO DELAY

If a delay occurs in the issuance of an Unlimited Notice to Proceed beyond the timeframe noted in the Notices to Proceed Project Special Provision; and (1) the delay is beyond the control of the Design-Build Team; and (2) the Design-Build Team can provide satisfactory evidence that the Critical Path of the Project has been delayed through a verified Critical Path Method Schedule analysis, then the following schedule and cost relief provisions will apply, unless mutually agreed to be waived by both the NCTA and the Design-Build Team:

Schedule Relief

Contract time extension(s) will be administered in accordance with the 2012 *Standard Specifications for Roads and Structures* and as may be modified in the Standard Special Provision entitled "Division One" contained elsewhere in the RFP. The contract time extension will apply to the Substantial Completion Date and the Final Completion Date. Contract time extensions applicable as a result of the NCTA's inability to execute the contract due to funding will also be applicable to the Bonus for early completion.

Cost Relief

The Total Lump Sum Amount Bid for the Entire Project will be adjusted in the following manner:

- The adjustment will be based on the 20-City Construction Cost Index published in the Engineering News Record (e.g. Construction Cost Index of 9173 in November 2011). The index value most recently reported prior to the expiration of the timeframes set out in the Environmental Permits Scope of Work will serve as the baseline index value. The index value most recently reported prior to the issuance of the last permit needed to begin construction of the project ("final index value") will then be compared to the baseline index value.

- To determine the adjustment amount, the percentage increase (or decrease) from the baseline index value to the final index value will then be multiplied by an amount equal to the Lump Sum Amount Bid for the Entire Project less the sum of all partial payments made to the Design-Build Team to date.

- In the event the delay in the issuance of the Unlimited Notice to Proceed is less than one year, the adjustment to the Total Amount Bid for the Entire Project is limited to a total 5% adjustment upward or downward.

- In the event that the delay in issuance of the Unlimited Notice to Proceed exceeds one year, then the adjustment to the Total Amount Bid for the Entire Project is limited to a percentage equal to 5% per annum, prorated by month (e.g. 7.5% cap for 18 month delay).

The price adjustment outlined in this provision will be full and complete compensation for any and all issues resulting from a delay in issuance of the Unlimited Notice to Proceed.

This adjustment will be made based only on delays substantiated by the Project CPM analysis as agreed to by the Engineer

TERMINATION OF CONTRACT

In the event that the project for whatever reason cannot be fully funded and an Unlimited Notice to Proceed cannot be issued, the contract will be terminated notwithstanding the paragraph below.

The NCTA reserves the right to maintain the contract in effect until such time that a full set of sealed record drawings, across all disciplines, are complete and submitted to the NCTA.

SUBSTANTIAL COMPLETION BONUS

Coordination and cooperation among the Design-Build Team and the Toll Integrator is critical. Please refer to Project Special Provision titled "Cooperation Between Contractors".

The NCTA desires that each of these entities work with such labor, equipment and materials as necessary to ensure that the Substantial Completion Date will be met without regard to the time extensions and time reliefs provided for in this contract or any associated Specifications. Therefore, as full compensation for all extra cost involved and subject to the conditions outlined herein, the NCTA agrees to pay as a bonus, the amount noted below:

1. In the event that Substantial Completion, as defined by the Project Special Provision entitled "Substantial Completion," is achieved by the Substantial Completion Date proposed in the Technical Proposal, and toll collection and enforcement technology is fully implemented with appropriate accuracy levels achieved and uninterrupted revenue collection could begin immediately upon opening to traffic, the aggregate sum of $2,000,000.00will be paid to the Design-Build Team for this project.

2. In the event the Design-Build Team fails to achieve Substantial Completion in accordance with the requirements noted above, then no bonus of any kind will be paid under this provision.

If the Unlimited Notice to Proceed is delayed due to a delayed Financial Closing Date as noted in the Project Special Provision, "Notices to Proceed," the Substantial Completion Date for the purposes of the bonus noted herein will be adjusted in accordance with the 2012 *Standard Specifications for Roads and Structures* and as modified by the Standard Special Provision entitled "Division One" contained elsewhere in this RFP**. An adjustment to the Substantial Completion Date will not apply for the purpose of the bonus unless the adjustment is granted solely due to a delay in the Financial Closing Date.**

Once toll collection begins, the Design-Build Team is responsible for the initial payment of all tolls following NCTA customer business policies. All contract related tolls, at the NC Quick Pass toll rate and the cost of NC Quick Pass sticker tags will be reimbursed by NCTA. The NCTA will only reimburse the tolls at the discounted transponder rates.

OTHER LIQUIDATED DAMAGES AND INCENTIVES

(3-17-08) DB1 G11

Refer to the Traffic Management Scope of Work for more information on the following time restrictions and liquidated damages:

Liquidated Damages for **Intermediate Contract Time #1** for lane narrowing, lane closure, holiday and special event time restrictions for I-485, including ramps and loops, are $5,000.00 per 30 minutes or any portion thereof..

Liquidated Damages for **Intermediate Contract Time #2** for road closure time restrictions for I-485, including ramps and loops, are $2,500.00 per 15 minute period or any portion thereof.

Liquidated Damages for **Intermediate Contract Time #3** for road closure time restrictions for -Y- lines are $250.00 per 15 minute period or any portion thereof.

Erosion and Sedimentation Control Incentives and Liquidated Damages

The Design-Build Team will be eligible for an incentive in the amount of $200,000.00 if construction operations have been performed in accordance with all environmental regulations and the Specifications, and the Design-Build Team does not receive any Immediate Corrective Actions (ICA), Continuances of Immediate Correction Action (CICA), Notices of Violation (NOV), and/or Cease and Desist (C&D) orders at any time during the project.

The Design-Build Team's first NOV or C&D order violation shall result in a forfeiture of the entire incentive noted above. The Design-Build Team will forfeit $50,000.00 from the incentive or portion remaining for each ICA and/or CICA violation. Upon the forfeiture of the entire $200,000.00 incentive, damages in the amount of $10,000 per day for a NOV, C&D order, or CICA violation or $2,500 per day for an ICA violation shall be deducted from the lump sum bid amount due to the Design-Build Team until the NOV, C&D order, CICA or ICA is lifted.

Reference the Erosion and Sedimentation Control Scope of Work found elsewhere in this RFP for additional information and additional Liquidated Damages.

All-Electronic-Tolling Infrastructure and Conduit

Liquidated damages apply to the completion dates of the open-road tolling infrastructure and all ITS devices to ensure that adequate time is reserved for the Toll Integration contractor to complete their work by the Substantial Completion Date.

Liquidated damages for Intermediate Contract Date #1 for completion of the all-electronic tolling infrastructure and communications network, including the toll fiber-optic cable, for AET Zones 1 and 2 are Seven Thousand Five Hundred ($5,000.00) per calendar day. The portion of work required for this Intermediate Contract Date is all work necessary to design, fabricate, install, and erect at these locations the toll gantries, conduit, fiber-optic cable and other items as depicted in the AET Scope of Work, AET Standard Drawings, ITS Scope of Work, and ITS Concept Plan

and any other scopes of work sufficient to allow installation and testing of toll technology by the Toll Integrator. This includes a tested fiber-optic connection between AET Zones 1 and 2. The Completion Date for this Intermediate Contract Date #1 is 180 days prior to the Substantial Completion Date.

Liquidated damages for Intermediate Contract Date #2 for completion of the all-electronic tolling infrastructure and communications network, including the toll fiber-optic cable, for AET Zones 3, 4 and 5 are Seven Thousand Five Hundred ($5,000.00) per calendar day. The portion of work required for this Intermediate Contract Date is all work necessary to design, fabricate, install, and erect at these locations the toll gantries, conduit, fiber-optic cable and other items as depicted in the AET Scope of Work, AET Standard Drawings, ITS Scope of Work, and ITS Concept Plan and any other scopes of work sufficient to allow installation and testing of toll technology by the Toll Integrator. This includes a tested fiber-optic connection between AET Zones 1, 2, 3, 4, and 5. The Completion Date for this Intermediate Contract Date #2 is 150 days prior to the Substantial Completion Date.

Liquidated damages for Intermediate Contract Date #3 for completion of the communications network, including the toll fiber-optic cable, for AET Zones 6, and 7 are Seven Thousand Five Hundred ($7,500.00) per calendar day. The portion of work required for this Intermediate Contract Date is all work necessary to design and install at these locations the fiber-optic cable and other items as depicted in the AET Scope of Work, AET Standard Drawings, ITS Scope of Work, and ITS Concept Plan and any other scopes of work sufficient to allow installation and testing of toll technology by the Toll Integrator. This includes a tested fiber-optic connection between AET Zones 1, 2, 3, 4, 5, 6, and 7. The Completion Date for this Intermediate Contract Date #3 is 120 days prior to the Substantial Completion Date.

Liquidated damages for Intermediate Contract Date #4 for completion of the communications network, including the toll fiber-optic cable, for AET Zones 8, and 9 are Seven Thousand Five Hundred ($7,500.00) per calendar day. The portion of work required for this Intermediate Contract Date is all work necessary to design and install at these locations the fiber-optic cable and other items as depicted in the AET Scope of Work, AET Standard Drawings, ITS Scope of Work, and ITS Concept Plan and any other scopes of work sufficient to allow installation and testing of toll technology by the Toll Integrator. This includes a tested fiber-optic connection between AET Zones 1, 2, 3, 4, 5, 6, 7, 8, and 9. The Completion Date for this Intermediate Contract Date #4 is 90 days prior to the Substantial Completion Date.

COST-LOADED CRITICAL PATH METHOD PROJECT SCHEDULE

(10-28-11) SP

A cost-loaded Critical Path Method Project Schedule (CPM) is required for this project. Reference Article 108-2 of the Standard Special Provision entitled “Division One” found elsewhere in this RFP.

MOBILIZATION

(9-1-11) DB1 G15B

Revise the 2012 *Standard Specifications for Roads and Structures* as follows:

Page 8-1, Subarticle 800-2, MEASUREMENT AND PAYMENT

Delete this subarticle in its entirety and replace with the following:

800-2 MEASUREMENT AND PAYMENT

Five (5) percent of the "Total Amount of Bid for Entire Project" shall be considered the lump sum amount for Mobilization. Partial payments for Mobilization will be made beginning with the first partial pay estimate paid on the contract. Payment for mobilization on the first pay estimate will be made at the rate of 5 percent of the lump sum amount calculated for Mobilization. Then 45% of the mobilization will be paid with the partial pay estimate following approval of all permits required in the Environmental Permits Scope of Work. The remaining 50% of the mobilization amount will be paid with the second partial pay estimate following approval of all permits required in the Environmental Permits Scope of Work.

SUBSTANTIAL COMPLETION

(3-22-07) DB1 G16

The Project will have reached Substantial Completion when all of the following requirements are satisfied:

1. Through traffic has been placed along the Project so that all lanes and shoulders are open such that traffic can move unimpeded at the posted speed and intersecting roads and service roads are complete to the extent that they provide the safe and convenient use of the facility by the public.
2. The final layers of pavement for all lanes and shoulders along the mainline of the project are complete.
3. All signs are complete and accepted, including those for toll collection purposes, except for the signs on intersecting roadways.
4. All guardrails, drainage devices, ditches, excavation and embankment are complete.
5. Remaining work along the mainline of the project consists of permanent pavement markings, permanent pavement markers or incidental construction that is away from the paved portion of the roadway.
6. A satisfactory warranty bond is executed and provided to the NCTA. Reference the Project Special Provision "Three-Year Guarantee."

Upon apparent substantial completion of the Project, the Design-Build Team will perform an in-depth self-inspection to ensure that the Project meets the conditions of Substantial Completion as defined herein. Upon recommendation from the Design-Build Team, the Engineer will perform a subsequent inspection. The results of the Engineer's inspection will be shared with the

Design-Build Team in writing, and the Design-Build Team will be advised as to whether or not the Engineer has determined Substantial Completion to have been met. Substantial Completion will not have occurred until all of the recommendations made, if any, at the time of the Engineer's inspection have been satisfactorily met.

Once toll collection begins, the NCTA will loan transponders to the Design-Build Team to allow completion of the project free of tolls.

FUEL PRICE ADJUSTMENTS
(10-28-11) SP

The Design-Build Team shall prepare and submit an Estimate of Quantities in accordance with the Instructions to Proposers, Section 3.C.

The Design-Build Team's Estimate of Quantities will be used on the various partial payment estimates to determine fuel price adjustments. The Design-Build Team shall submit a payment request for quantities of work completed based on the work completed for that estimate period. The quantities requested for partial payment shall be reflective of the work actually accomplished for the specified period. The Design-Build Team shall certify that the quantities are reasonable for the specified period. The base index price for DIESEL #2 FUEL is $XXX.XX per gallon.

PARTNERING
(07-29-09) DB1 G49

As a part of its quality management program, the North Carolina Turnpike Authority intends to encourage the formation of a cohesive relationship with the Design-Build Team and its principal subcontractors and suppliers. This relationship will be structured to draw on the strengths of each organization to identify and achieve reciprocal goals. The objectives are safe, effective, and efficient contract performance; and completion of a quality, durable, long lasting project within budget, on schedule, and in accordance with the plans and specifications.

This relationship will be bilateral in makeup. The Design-Build Team shall hire a professional facilitator to conduct partnering meetings every 4 months thereafter for the life of the project. All cost associated with this item shall be included in the Design-Build Team's lump sum bid.

To implement this initiative prior to starting work and prior to the preconstruction conference, the Design-Build Team's management personnel and NCTA Director of Construction will initiate a partnering development seminar/team building workshop. Project personnel will assist in the arrangements to determine attendees at the workshop, agenda of the workshop, duration, and location. Persons required to be in attendance will be representatives from the NCTA and the NCDOT Transportation Program Management Unit, and key project personnel; the Design-Build Team's senior management personnel, the Design-Build Team's on-site project manager, and key project supervisory personnel for both the Design-Build Team and principal subcontractors and suppliers. The project design engineers, FHWA, and key local government personnel will also be invited to attend as necessary.

The establishment of the partnering charter on a project will not change the legal relationship to the contract nor relieve either party from any of the terms of the contract.

FAA NOTIFICATION OF CONSTRUCTION

(10-28-11) SP

The Design-Build Team shall adhere to the requirements of the *FAA Operational Safety On Airports During Construction* Advisory Circular and the Charlotte-Douglas International Airport Authority Safety Program. The Design-Build Team shall notify the Federal Aviation Administration (FAA) and the Charlotte-Douglas International Airport Authority in writing sixty days prior to any construction activities on the project, at the following addresses**:**

FAA

Carole Bernacchi, Air Traffic State Technician
Federal Aviation Administration
carole.bernacchi@faa.gov
https://oeaaa.faa.gov/
Telephone: 847-294-8084

Charlotte-Douglas International Airport Authority

Jerry Orr, Aviation Director
Charlotte-Douglas Intl Airport
5501 Josh Birmingham Parkway
Charlotte, NC 28208
Telephone: 704-359-4000

The Design-Build Team shall be responsible for all work and costs associated with the FAA forms and approvals required for construction of the project. This shall include, but is not limited to, preparation and submittal of forms 7460-1 and 7460-2. These forms, instructions and examples of previous DOT projects can be found at the website listed above.

VALUE ANALYSIS

(9-1-11) DB1 G57

Value Engineering Proposals, as specified in Article 104-12 of the 2012 *Standard Specifications for Roads and Structures* will be accepted. Only proposals, which alter the requirements of the RFP issued by the Department, will be considered as Value Engineering Proposals.

SCHEDULE OF ESTIMATED COMPLETION PROGRESS

(9-1-11) DB1 G58

The Design-Build Team's attention is directed to the Standard Special Provision entitled "Availability of Funds - Termination of Contracts" included elsewhere in this RFP. The Department of Transportation's schedule of estimated completion progress for this project as required by that Standard Special Provision is as follows:

Fiscal Year	Progress (Dollar Value)
2012 (07/01/11 – 06/30/12)	5 % of Total Amount Bid
2013 (07/01/12 – 06/30/13)	22 % of Total Amount Bid
2014 (07/01/13 – 06/30/14)	30 % of Total Amount Bid
2015 (07/01/14 – 06/30/15)	29 % of Total Amount Bid
2016 (07/01/15 – 06/30/16)	14 % of Total Amount Bid

The Authority will invest project funds in a variety of investment instruments directly upon receipt. In order to ensure funds are readily available, to facilitate the Design-Build Team's

construction schedule and respective payments, and allow for reasonable investment of these funds, if the Design-Build Team anticipates that their schedule will require payments to be accelerated from that indicated above, the Design-Build Team shall submit with their Price Proposal a similar chart to that above. This chart shall indicate the Design-Build Team's anticipated payout schedule, in terms of percentages of the entire lump sum price bid for the project, on a fiscal year basis. The NCTA does not intend to limit progress based on the above schedule of estimated progress unless required to do so by the North Carolina General Assembly or the trustee of the project funds.

The Design-Build Team shall also furnish his own cost-loaded CPM in accordance with Article 108-2 of the Standard Special Provision entitled "Division One" contained elsewhere in the RFP. Any acceleration of the progress as shown by the Design-Build Team's progress schedule over the progress as shown above shall be subject to the approval of NCTA.

REVISION TO FHWA-1273 CONCERNING PERSONAL INFORMATION ON PAYROLL SUBMISSIONS

(1-20-09) DB1G59

Revise the *Standard Special Provision FHWA-1273 Required Contract Provisions Federal-Aid Construction Contracts* as follows:

Section V, Paragraph 2b is replaced with the following:

The payroll records shall contain the name, and the last four digits of the social security number of each such employee, his or her correct classification; hourly rates of wages paid (including rates of contributions or costs anticipated for bona fide fringe benefits or cash equivalent thereof the types described in Section 1(b)(2)(B) of the Davis Bacon Act); daily and weekly number of hours worked; deductions made; and actual wages paid.

DISADVANTAGED BUSINESS ENTERPRISE

(9-1-11) DB1 G61

The Design-Build Team's attention is directed to Section 10 of the Instructions to Proposers (Volume I) which contains pertinent definitions and DBE requirements to be met during the procurement period and prior to contract award and which, by reference, are fully incorporated into these Contract Documents.

Description

The purpose of this Special Provision is to carry out the U.S. Department of Transportation's policy of ensuring nondiscrimination in the award and administration of contracts financed in whole or in part with Federal funds. This provision is guided by 49 CFR Part 26.

Forms and Websites Referenced in this Provision

DBE Payment Tracking System - On-line system in which the Design-Build Team enters the payments made to DBE subcontractors who have performed work on the project.

https://partner.ncdot.gov/VendorDirectory/default.html

RF-1 *DBE Replacement Request Form* - Form for replacing a committed DBE.

www.ncdot.org/doh/operations/dp_chief_eng/constructionunit/formsmanuals/rf-1.pdf

SAF *Subcontract Approval Form* - Form required for approval to sublet the contract.

www.ncdot.org/doh/operations/dp_chief_eng/constructionunit/saf.xls

JC-1 *Joint Check Notification Form* - Form and procedures for joint check notification. The form acts as a written joint check agreement among the parties providing full and prompt disclosure of the expected use of joint checks.

www.ncdot.gov/doh/forms/files/JC-1.pdf

Contract Goal

The following goal for participation by Disadvantaged Business Enterprises is established for this contract:

Disadvantaged Business Enterprises **14%**

The Design-Build Team shall exercise all necessary and reasonable steps to ensure that Disadvantaged Business Enterprises participate in at least the percent of the contract as set forth above as the goal.

This goal is to be met through utilization of highway construction contractors and / or right-of-way acquisition firms. Utilization of DBE firms performing design, other preconstruction services, or Construction Engineering and Inspection are not included in this goal.

Counting DBE Participation Toward Meeting DBE Goal

For requirements for counting DBE participation toward meeting the goal, reference the portion of Section 10 of the Instructions to Proposers entitled "Counting DBE Participation Toward Meeting DBE Goal"; said requirements, by reference, are incorporated and made a part of these Contract Documents.

Commercially Useful Function

For the determination of qualifying that a DBE is serving a commercially useful function, reference the portion of Section 10 of the Instructions to Proposers entitled "Commercially Useful Function"; said requirements, by reference, are incorporated and made a part of these Contract Documents.

DBE Replacement

When a Design-Build Team has relied on a commitment to a DBE firm (or an approved substitute DBE firm) to meet all or part of a contract goal requirement, the Design-Build Team shall not terminate the DBE for convenience. This includes, but is not limited to, instances in which the Design-Build Team seeks to perform the work of the terminated subcontractor with

another DBE subcontractor, a non-DBE subcontractor, or with the Contractor's own forces or those of an affiliate. A DBE may only be terminated after receiving the Engineer's written approval based upon a finding of good cause for the termination.

All requests for replacement of a committed DBE firm shall be submitted to the Engineer for approval on Form RF-1 *(DBE Replacement Request).* If the Design-Build Team fails to follow this procedure, the Prime Contractor or other affiliated companies within the Design-build Team may be disqualified from further bidding for a period of up to 6 months.

The Design-Build Team shall comply with the following for replacement of a committed DBE:

(A) Performance Related Replacement

When a committed DBE is terminated for good cause as stated above, an additional DBE that was submitted at the time of bid may be used to fulfill the DBE commitment. A good faith effort will only be required for removing a committed DBE if there were no additional DBEs submitted at the time of bid to cover the same amount of work as the DBE that was terminated.

If a replacement DBE is not found that can perform at least the same amount of work as the terminated DBE, the Design-Build Team shall submit a good faith effort documenting the steps taken. Such documentation shall include, but not be limited to, the following:

(1) Copies of written notification to DBEs that their interest is solicited in contracting the work defaulted by the previous DBE or in subcontracting other items of work in the contract.

(2) Efforts to negotiate with DBEs for specific subbids including, at a minimum:

(a) The names, addresses, and telephone numbers of DBEs who were contacted.

(b) A description of the information provided to DBEs regarding the plans and specifications for portions of the work to be performed.

(3) A list of reasons why DBE quotes were not accepted.

(4) Efforts made to assist the DBEs contacted, if needed, in obtaining bonding or insurance required by the Design-Build Team.

(B) Decertification Replacement

(1) When a committed DBE is decertified by the Department after the SAF (*Subcontract Approval Form*) has been received by the Department, the Department will not require the Design-Build Team to solicit replacement DBE participation equal to the remaining work to be performed by the decertified firm. The participation equal to the remaining work performed by the decertified firm will count toward the contract goal requirement.

(2) When a committed DBE is decertified prior to the Department receiving the SAF (*Subcontract Approval Form*) for the named DBE firm, the Design-Build Team shall take all necessary and reasonable steps to replace the DBE subcontractor with another DBE subcontractor to perform at least the same amount of work to meet the DBE goal requirement. If a DBE firm is not found to do the same amount of work, a good faith effort must be submitted to NCDOT (see A herein for required documentation).

Changes in the Work

When the Engineer makes changes that result in the reduction or elimination of work to be performed by a committed DBE, the Design-Build Team will not be required to seek additional participation. When the Engineer makes changes that result in additional work to be performed by a DBE based upon the Design-Build Team's commitment, the DBE shall participate in additional work to the same extent as the DBE participated in the original contract work.

When the Engineer makes changes that result in extra work, which has more than a minimal impact on the contract amount, the Design-Build Team shall seek additional participation by DBEs unless otherwise approved by the Engineer.

When the Engineer makes changes that result in an alteration of plans or details of construction and a portion or all of work had been expected to be performed by a committed DBE, the Design-Build Team shall seek participation by DBEs unless otherwise approved by the Engineer.

When the Design-Build Team requests changes in the work that result in the reduction or elimination of work that the Design-Build Team committed to be performed by a DBE, the Design-Build Team shall seek additional participation by DBEs equal to the reduced DBE participation caused by the changes.

Reports and Documentation

A SAF (*Subcontract Approval Form*) shall be submitted for all work which is to be performed by a DBE subcontractor. The Department reserves the right to require copies of actual subcontract agreements involving DBE subcontractors.

When using transportation services to meet the contract commitment, the Design-Build Team shall submit a proposed trucking plan in addition to the SAF. The plan shall be submitted prior to beginning construction on the project. The plan shall include the names of all trucking firms proposed for use, their certification type(s), the number of trucks owned by the firm, as well as the individual truck identification numbers, and the line item(s) being performed.

Within 30 calendar days of entering into an agreement with a DBE for materials, supplies or services, not otherwise documented by the SAF as specified above, the Design-Build Team shall furnish the Engineer a copy of the agreement. The documentation shall also indicate the percentage (60% or 100%) of expenditures claimed for DBE credit.

Reporting Disadvantaged Business Enterprise Participation

The Design-Build Team shall provide the Engineer with an accounting of payments made to all DBE firms, including material suppliers and contractors at all levels (prime, subcontractor, or second tier subcontractor). This accounting shall be furnished to the Engineer for any given month by the end of the following month. Failure to submit this information accordingly may result in the following action:

(A) Withholding of money due in the next partial pay estimate; or

(B) Removal of an approved Prime Contractor or other affiliated companies within the Design-Build Team from the prequalified bidders' list or the removal of other entities from the approved subcontractors list.

While each contractor (prime, subcontractor, 2nd tier subcontractor) is responsible for accurate accounting of payments to DBEs, it shall be the prime contractor's responsibility to report all monthly and final payment information in the correct reporting manner.

Failure on the part of the Design-Build Team to submit the required information in the time frame specified may result in the disqualification of that Prime Contractor and any affiliate companies within the Design-Build Team from further bidding until the required information is submitted.

Failure on the part of any subcontractor to submit the required information in the time frame specified may result in the disqualification of that Prime Contractor or any affiliate companies within the Design-Build Team from being approved for work on future DOT projects until the required information is submitted.

Design-Build Teams reporting transportation services provided by non-DBE lessees shall evaluate the value of services provided during the month of the reporting period only.

At any time, the Engineer can request written verification of subcontractor payments.

The Design-Build Team shall report the accounting of payments through the Department's DBE Payment Tracking System.

Failure to Meet Contract Requirements

Failure to meet contract requirements in accordance with Subarticle 102-15(J) of the 2012 *Standard Specifications for Roads and Structures* may be cause to disqualify the Prime Contractor or any affiliated companies within the Design-Build Team from further bidding for a specified length of time.

CERTIFICATION FOR FEDERAL-AID CONTRACTS

(3-21-90) DB1 G85

The prospective participant certifies, by signing and submitting this Price Proposal, to the best of his or her knowledge and belief, that:

(1) No Federal appropriated funds have been paid or will be paid, by or on behalf of the undersigned, to any person for influencing or attempting to influence an officer or employee of any Federal agency, a Member of Congress, an officer or employee of Congress, or an employee of a Member of Congress in connection with the awarding of any Federal contract, the making of any Federal grant, the making of any Federal loan, the entering into of any cooperative agreement, and the extension, continuation, renewal, amendment, or modification of any Federal contract, grant, loan, or cooperative agreement.

(2) If any funds other than Federal appropriated funds have been paid or will be paid to any person for influencing or attempting to influence an officer or employee of any Federal agency, a Member of Congress, an officer or employee of Congress, or an employee of a Member of Congress in connection with this Federal contract, grant, loan, or cooperative agreement, the undersigned shall complete and submit Standard Form-LLL, "Disclosure Form to Report Lobbying," in accordance with its instructions.

This certification is a material representation of fact upon which reliance was placed when this transaction was made or entered into. Submission of this certification is a prerequisite for making or entering into this transaction imposed by Section 1352, *Title 31, U.S. Code*. Any person who fails to file the required certification shall be subject to a civil penalty of not less than $10,000 and not more than $100,000 for each such failure.

The Proposer also agrees by submitting his or her Price Proposal that he or she shall require that the language of this certification be included in all lower tier subcontracts, which exceed $100,000 and that all such sub-recipients shall certify and disclose accordingly.

CONTRACTOR'S LICENSE REQUIREMENTS

(7-1-95) DB1 G88

If the Design-Build Team does not hold the proper license to perform any plumbing, heating, air conditioning, or electrical work in this contract, he will be required to sublet such work to a contractor properly licensed in accordance with *Article 2 of Chapter 87 of the General Statutes* (licensing of heating, plumbing, and air conditioning contractors) and *Article 4 of Chapter 87 of the General Statutes* (licensing of electrical contractors).

U.S. DEPARTMENT OF TRANSPORTATION HOTLINE

(11-22-94) DB1 G100

To report bid rigging activities call: **1-800-424-9071**

The U.S. Department of Transportation (DOT) operates the above toll-free *hotline* Monday through Friday, 8:00 a.m. to 5:00 p.m. eastern time. Anyone with knowledge of possible bid

rigging, bidder collusion, or other fraudulent activities should use the *hotline* to report such activities.

The *hotline* is part of the DOT's continuing effort to identify and investigate highway construction contract fraud and abuse and is operated under the direction of the DOT Inspector General. All information will be treated confidentially and caller anonymity will be respected.

SUBSURFACE INFORMATION

(3-22-07) DB1 G119

Available subsurface information will be provided on this project. The Design-Build Team shall be responsible for additional investigations and for verifying the accuracy of the subsurface information supplied.

By submitting its Price Proposal, the Proposer acknowledges that the subsurface information furnished by NCDOT or NCTA is preliminary and provided solely to assist the Proposer in the development of the project design. No information with respect to subsurface conditions furnished by the NCTA or NCDOT shall be considered a Contract Document or part of the Contract. If the Proposer or Design-Build Team relies upon any subsurface information furnished by NCTA or NCDOT, they do so at their own risk.

COOPERATION BETWEEN CONTRACTORS

(9-1-11) DB1 G133

The Design-Build Team's attention is directed to Article 105-7 of the 2012 *Standard Specifications for Roads and Structures*. The following projects are in the immediate vicinity of U-3321C&DA:

- U-3321AA&B Gaston County, Garden Parkway – West, From I-85 West of Gastonia to West of SR 2428 (Wilson Farm Road in Gaston County)

The Design-Build Team on this project shall cooperate with the Contractor or Design-Build Team working within or adjacent to the limits of this project, to the extent that the work can be carried out to the best advantage of all concerned.

The NCTA will advertise and select a contractor for Landscaping after the award of this contract and therefore no landscaping shall be included in the Design-Build Team's Price Proposal. This contract will encompass the entire Garden Parkway Corridor and construction will be performed concurrent with this Design-Build contract. The Design-Build Team shall coordinate with the Toll System Integrator in the planning, scheduling, design and construction of the elements that are collective to both entities. The Design-Build Team shall integrate the toll system integration schedules into the CPM schedule and make work areas available, as needed, to successfully meet the contract substantial completion date and contract completion dates. Close coordination with the Toll System Integrator is essential.

The Design-Build Team for this project shall be required to meet and coordinate with the Toll Integration, Landscaping, and any other Contractors necessary to successfully plan, design, and construct the Garden Parkway Corridor.

Meetings shall be scheduled and attended by authorized representatives of this Design-Build Team and include personnel from the Toll Integration Contractor, Landscaping Contractor, any other pertinent Contractors, and representatives from the NCTA and NCDOT. At a minimum, there shall be a pre-construction meeting, meetings during the construction process, and a post-construction meeting. One final meeting shall be held to reach concurrence that all the construction and toll facility components have been installed properly and function to provide the ability to collect revenue from this freeway.

PRICE PROPOSAL DOCUMENTATION

(10-28-11) SP

General

The successful Design-Build Team shall submit the original, unaltered Price Proposal documentation or a certified copy of the original, unaltered Price Proposal documentation used to prepare the Price Proposal for this contract to the Department in accordance with Section 12 of the Instructions to Proposers (Volume I). By reference, the requirements of Section 12 of the Instructions to Proposers are hereby fully incorporated into these Contract Documents.

Duration and Use

The Price Proposal documentation and affidavit shall remain in escrow until sixty (60) calendar days from the time the Design-Build Team receives full payment on the final estimate; or until such time as the Design-Build Team gives written notice of intent to file a claim, files a written claim, files a written and verified claim, or initiates litigation against the NCTA or Department related to the contract; or until authorized in writing by the Design-Build Team. Upon the giving of written notice of intent to file a claim, filing a written claim, filing a written and verified claim, or the initiation of litigation by the Design-Build Team against the NCTA or the Department, or receipt of a letter from the Design-Build Team authorizing release, the Department may obtain the release and custody of the Price Proposal documentation. If the Price Proposal documentation remains in escrow sixty (60) calendar days after the time the Design-Build Team receives the final payment and the Design-Build Team has not filed a written claim, filed a written and verified claim, or has not initiated litigation against the NCTA or the Department related to the contract, the Department shall instruct the banking institution or other bonded document storage facility to release the sealed container to the Design-Build Team.

The Proposer certifies and agrees that the sealed container placed in escrow contains all of the Price Proposal documentation used to determine the Price Proposal and that no other bid documentation shall be relevant or material in litigation over claims brought by the Design-Build Team arising out of this contract.

Confidentiality of Bid Documentation

The Price Proposal documentation and affidavit in escrow are, and will remain, the property of the Proposer. The Department has no interest in, or right to, the Price Proposal documentation and affidavit other than to verify the contents and legibility of the Price Proposal documentation unless the Design-Build Team gives written notice of intent to file a claim, files a written claim, files a written and verified claim, or initiates litigation against the NCTA or the Department. In

the event of such written notice of intent to file a claim, filing of a written claim, filing a written and verified claim, or initiation of litigation against the NCTA or the Department, or receipt of a letter from the Design-Build Team authorizing release, the Price Proposal documentation and affidavit may become the property of the Department for use in considering any claim or in litigation as the Department may deem appropriate.

Any portion or portions of the Price Proposal documentation designated by the Proposer as a "trade secret" at the time the bid documentation is delivered to the State Contract Officer shall be protected from disclosure as provided by *G.S. 132-1.2*.

Cost and Escrow Instructions

The cost of the escrow will be borne by the NCTA. The Department will provide escrow instructions to the banking institution or other bonded document storage facility consistent with this provision.

Payment

There will be no separate payment for all costs of compilation of the data, container, or verification of the Price Proposal documentation. Payment at the lump sum price for the Design-Build project will be full compensation for all such costs.

DISPUTE REVIEW BOARD (DRB)

(10-28-11) SP

GENERAL

A. Definitions

Dispute – A contractual issue that involves cost and/or time (either credits or additions) that remains unresolved following good faith negotiations between authorized representatives of the Design-Build Team and the North Carolina Turnpike Authority (NCTA).

Dispute Review Board (DRB) – three neutral individuals, selected as provided herein, that reviews Disputes and renders findings and recommendations based on the Contract.

B. Formal DRB Review

This provision provides for a formal DRB review process.

Any of the procedures for the formal DRB Review established by this provision may be altered or modified by mutual written agreement of the Design-Build Team and the NCTA to better suit the needs of a particular Dispute.

C. Summary

A DRB will be established to assist in the analysis of Disputes that arise between the Design-Build Team and the NCTA, to include, but not limited to, Articles 104-4 and104-

8(B) of the 2012 *Standard Specifications for Roads and Structures* or 108-10 of the Standard Special Provisions, Division One, contained elsewhere in this RFP.

It is not intended for the NCTA or the Design-Build Team to default on their normal responsibilities to cooperatively and fairly settle their differences by indiscriminately assigning them to the DRB. It is intended that the DRB encourage the NCTA and Design-Build Team to resolve potential disputes without resorting to this alternative resolution procedure.

Utilization of the DRB does not relieve the Design-Build Team or NCTA from complying with all Contract terms and conditions, and does not waive any notice or timeliness requirements of the 2012 *Standard Specifications for Roads and Structures*. However, if a Dispute is referred to the DRB, the claim submittal and review time frames may be superseded by time frames established by the DRB, and agreed to in writing by both the Design-Build Team and the NCTA.

Either the Design-Build Team or the NCTA may refer a Dispute to the DRB. Such referral should be initiated as soon as it appears that the normal NCTA-Design-Build Team dispute resolution effort is not succeeding. However, prior to referring a Dispute to the DRB, the NCTA and Design-Build Team must agree on the central or core issue to bring before the DRB.

Promptly thereafter, the DRB will impartially consider the Dispute(s) referred to it. The DRB will provide **non-binding** written findings and recommendations to the Design-Build Team and the NCTA.

Although the findings and recommendations of the DRB should carry great weight for both the Design-Build Team and the NCTA, they are **not binding** on either the Design-Build Team or the NCTA.

The Dispute Review Board is a condition of this Contract. The NCTA and the Design-Build Team agree that the submission of any unresolved dispute or claim to the DRB is a condition precedent to the Design-Build Team submitting a final claim.

D. Scope

This provision describes the purpose, procedure, function, and features of the DRB. A Three-Party Agreement among the NCTA, Design-Build Team, and the selected DRB members will formalize creation of the DRB and establish the scope of its services and the rights and responsibilities of the Design-Build Team and the NCTA.

E. Purpose

The purpose of the DRB is to provide an independent and impartial review of the Dispute and provide **non-binding** written findings and recommendations, in accordance with the Contract, applicable contract law, industry practices, and the facts presented.

It is not the purpose, or responsibility, of the DRB to resolve the Dispute. That responsibility remains with the Design-Build Team and the NCTA. However, it is anticipated that the DRB review will assist the Design-Build Team and the NCTA in resolving the Dispute.

Creation of the DRB is not intended as a substitute for NCTA or Design-Build Team responsibility to make a good-faith effort to settle the Dispute. Indiscriminate referral of disputes to the DRB without prior attempts by the Design-Build Team and the NCTA to resolve them shall be avoided. The Design-Build Team or NCTA shall exhaust resolution through the escalation process defined in the formal partnering process prior to escalating an issue to the DRB.

F. Continuance of Work

Both the Design-Build Team and the NCTA shall proceed diligently with the work and comply with all applicable Contract provisions while the DRB considers a Dispute.

G. Tenure of DRB

The DRB will be deemed established after the NCTA, the Design-Build Team and the DRB execute the Three-Party Agreement.

The DRB will be dissolved as of the end of the contract unless earlier terminated or dissolved by mutual agreement of the Design-Build Team and the NCTA. If mutually agreed upon by the Design-Build Team and the NCTA, the DRB may be dissolved on the date of final payment to the Design-Build Team.

MEMBERSHIP

A. General

The DRB will consist of three members selected as provided below.

B. Criteria

Experience

1. It is desirable that all DRB members be experienced with the construction process including design, construction, contract administration, contract law, and resolution of construction disputes.
2. It is not necessary that the DRB members be intimately familiar with the specific type of construction involved in the Dispute. The DRB may consult technical experts if the need arises under provisions provided for elsewhere in this Special Provision

Neutrality

1. It is imperative that the DRB members be neutral, act impartially, and be free of any conflict of interest.

2. For purposes of this subparagraph, the term "member" also includes the member's current primary or full-time employer, and "involved" means having a contractual relationship with either the Design-Build Team or the NCTA, such as a subcontractor, architect, engineer, or construction manager.
3. Prohibitions; disqualifying relationships for prospective members:
   (a) An ownership interest in any entity involved in the Project or Contract, or a financial interest in the Contract, except for payment for services on this Dispute Review Board;
   (b) Previous employment by, or financial ties to, any party involved in the Contract within a period of eighteen (18) months prior to award of the Contract, except for fee-based consulting services on other projects;
   (c) A close professional or personal relationship with any key member of any entity involved in the Contract which, in the judgment of either the Design-Build Team or the NCTA, could suggest partiality; or
   (d) Prior involvement in the project of a nature that could compromise the prospective member's ability to participate impartially in the DRB's activities.
4. Prohibitions; disqualifying relationships for members:
   (a) Employment, including fee-based consulting services, by any entity involved in the construction contract except with the express approval of both the Design-Build Team and the NCTA;
   (b) Discussion concerning, or the making of, an agreement with any entity involved in the Contract regarding employment after the Contract is completed.
5. Any of the provisions of 1 through 4 above may be waived by mutual written agreement of the Design-Build Team and the NCTA.

C. Disclosure Statement

As a part of the selection process, all prospective DRB members will be required to submit complete disclosure statements for the approval of both the Design-Build Team and the NCTA. Each statement shall include a resume of experience, together with a declaration describing all past, present, and anticipated or planned future relationships, including indirect relationships through the prospective member's primary or full-time employer, to this project and with the Design-Build Team or the NCTA, or others involved in the Contract, including subcontractors, suppliers, design professionals, and consultants. Disclosure of close professional or personal relationships with all key members of the Design-Build Team or the NCTA or other parties involved in the construction Contract shall be included.

D. Selection Process

Within 30 calendar days of Notice to Proceed, or as otherwise mutually agreed upon by the Design-Build Team and NCTA, the Design-Build Team and the NCTA will jointly select the DRB using the following procedure:

1. To form a DRB, the NCTA will provide to the Design-Build Team a copy of the resume and references of the person proposed for the DRB. Likewise, the Design-Build Team

will provide NCTA the resume and references for their proposed DRB Member. The Design-Build Team and the NCTA will confirm the availability, neutrality, experience, and expertise of the nominees. Both the NCTA and Design-Build Team will have the ability to reject the others nominee. The parties shall continue to exchange nominee information until each party has selected a nominee that is acceptable to the other party. The NCTA shall be responsible for notifying the nominees of their selection.

2. Once the two mutually agreeable nominees have confirmed their participation within the DRB, they shall be responsible for selecting a third DRB member, who shall become the DRB Chairperson.
3. Should the need arise to select a replacement DRB member; the replacement member shall be selected in the same manner that the member to be replaced was selected.

E. Three-Party Agreement

The DRB members and the authorized representatives of the Design-Build Team and the NCTA shall execute the Dispute Review Board Three-Party Agreement within 2 weeks after the selections are made.

OPERATION

A. General

The DRB will operate in accordance with this provision. The DRB may initiate, with the concurrence of the NCTA and Design-Build Team, new procedures or modifications to existing procedures as it deems appropriate.

B. Contract Documents, Reports and Information

The NCTA will provide a set of the Contract Documents to each DRB member.

The DRB members will be kept informed of construction activity and other developments by means of timely transmittal of relevant information requested by the DRB and prepared by the Design-Build Team and the NCTA in the normal course of construction, including, but not limited to, periodic reports and minutes of progress meetings. The DRB shall also be provided "issue logs" and "Supplemental Agreement/Change Order Logs" throughout the life of the contract. At any time, the DRB may request copies of documents that are normally generated by the Design-Build Team or the NCTA during the course of business throughout the Project. Only during the resolution of a specific dispute may the DRB request reports, documents or other information that is <u>not</u> normally generated during the course of business, and this information shall be limited to that which is specific to this dispute. The party who generates the aforementioned documents will be responsible for providing such to the DRB in a timely manner.

C. Periodic Meetings and Visits

Meetings and/or site visits will be conducted on a periodic basis as mutually agreed among the NCTA, the Design-Build Team, and the DRB. The Design-Build Team shall provide the necessary transportation for a project tour.

Site visits should cover all active segments of the work. Representatives of both the Design-Build Team and the NCTA shall accompany the DRB during project meetings or site visits.

REVIEW OF DISPUTES

A. General

The Design-Build Team and the NCTA will cooperate to ensure that the DRB considers Disputes promptly, taking into consideration the particular circumstances and the time required to prepare appropriate documentation.

Procedures and time periods may be modified by mutual agreement.

B. Prerequisites to Review

A Dispute is subject to referral to the DRB when either the Design-Build Team or the NCTA believes that bilateral negotiations have reached an impasse. However, the NCTA and Design-Build Team must agree on the central or core issue to bring before the DRB prior to referring a dispute to the DRB.

C. Requesting Review

Either the Design-Build Team or the NCTA may refer a dispute to the DRB. Requests for DRB review shall be submitted in writing to the Chairperson of the DRB. The Request for Review shall state clearly and in full detail the specific core issue of the Dispute to be considered by the DRB. A copy of the request shall be simultaneously provided to the other party.

After conferring with both the Design-Build Team and the NCTA, the DRB Chairperson will establish a submittal/presentation schedule. Unless the Design-Build Team and the NCTA both agree otherwise, the presentation shall be scheduled no sooner than 30 days after receipt of the Request for Review and no sooner than 14 days after receipt of the rebuttal information.

Concise written position statements shall be prepared by both the Design-Build Team and the NCTA, with page number references to any supporting documentation, and submitted to each DRB member and simultaneously to the other party.

Any rebuttal information to the position statements shall be submitted to each DRB member and simultaneously to the other party

D. Presentation

Unless otherwise agreed by the DRB, the Design-Build Team and the NCTA, the presentation will be conducted at the NCTA office. However, any location that would be more convenient and still provide all required facilities and access to necessary documentation is satisfactory. Private deliberations of the DRB may be held at any convenient location.

The Design-Build Team and the NCTA shall have representatives in attendance at all presentations. The party that brought the dispute before the DRB will make its presentation first. A full presentation of the dispute shall be allowed without interruption, except from the DRB. Once all information is presented the other party may provide a rebuttal, at which time each party will be allowed successive rebuttals until all aspects of the dispute are fully covered. The DRB members, the Design-Build Team and the NCTA may ask questions, request clarification, or ask for additional data. In difficult or complex cases, additional presentations may be necessary in order to facilitate full consideration and understanding of all the evidence presented by both the Design-Build Team and the NCTA. Both the Design-Build Team and the NCTA shall be provided adequate opportunity to present their evidence, documentation, and statement regarding all issues before the DRB. No documents, materials, reports, analysis or other information of any type shall be referenced in the presentations or considered by the DRB in its review unless the same was previously provided to the other party as supporting documentation for the position statement.

Unless otherwise agreed by the Design-Build Team and the NCTA, presentations will relate to issues of entitlement only. Contract time extensions and compensation will be resolved between NCTA and the Design-Build Team, in accordance with the provisions of the Standard Special Provision entitled "Division One" contained elsewhere in this RFP.

Normally, a formal transcript of the presentations will not be prepared. When requested by either the Design-Build Team or the NCTA, the DRB may allow recordation and transcription with the cost to be allocated to the party requesting such documentation. Such transcript, when prepared, **shall not** constitute the official record of the DRB Review. The record prepared by the DRB shall be the official record of the DRB Review. The DRB may provide for audio or video recordings of the presentations for the use of the DRB only.

The Design-Build Team and the NCTA shall not have their attorneys in attendance at the presentations to counsel and/or advise them.

If either the Design-Build Team or the NCTA fails to appear before the DRB on the date scheduled for the presentations, without justifiable cause, the dispute will continue under the applicable provisions of the 2012 *Standard Specifications for Roads and Structures* and this RFP to include, but not be limited to, Articles 107-24 and 108-10 of the 2012 *Standard Specifications for Roads and Structures,* and Articles 104-8 and 109-10 of the of the 2012 *Standard Specifications for Roads and Structures* and as amended in the Standard Special Provision, Division One found elsewhere in this RFP.

E. Deliberations

After the presentation is concluded, the DRB will confer to formulate its findings and recommendations. All DRB deliberations shall be conducted in private, with all individual views kept confidential.

If the DRB desires technical assistance, the DRB will make a request in writing to both parties (Design-Build Team and NCTA) briefly defining the scope and estimated budget for the services. **Direct attorney advisement or assistance is prohibited.** If mutually agreeable, the Design-Build Team and NCTA will execute an agreement with a service provider. The Design-Build Team and NCTA will equally share the costs for the service provider. In the typical situation the special services provider will respond to questions from the DRB in private consultation between the provider and the DRB and no permanent record of the questions or responses will be required by the Design-Build Team or the NCTA. However, if mutually agreeable, these typical operating procedures may be modified. In arriving at its findings and recommendations, the DRB will not be bound by any information provided by the special service provider.

F. Findings and Recommendations

It is **not** the responsibility of the DRB to resolve the Dispute, only to make a recommendation based upon the contract documents and information supplied and presented before them. It shall remain the responsibility of the Design-Build Team and the NCTA to resolve all Disputes.

The findings and recommendations of the DRB will be provided in writing, by certified mail, return receipt requested, to both the Design-Build Team and the NCTA within 14 calendar days of the completion of the presentations or, when technical assistance is required, within 14 calendar days of receipt of technical assistance. The DRB should set forth, as clearly as possible, the logic and reasoning behind its findings and recommendations. The findings and recommendations will address entitlement only. In difficult or complex cases, and in consideration of the DRB member's schedule, this time may be extended by mutual agreement of the DRB, the Design-Build Team and the NCTA.

If the DRB is unable to reach unanimity in its findings and recommendations, the DRB will so advise the Design-Build Team and the NCTA in the report of the DRB. The DRB report shall consist of a majority opinion and, when the decision is not unanimous, a minority opinion.

G. Acceptance or Rejection

Within 30 calendar days of the date of the DRB's findings and recommendations, or such other time specified by the DRB, both the Design-Build Team and the NCTA shall provide, by certified mail return receipt requested, written notice to the other and to the DRB of acceptance or rejection of the DRB findings and recommendations.

If, with the aid of the DRB findings and recommendations, the Design-Build Team and the NCTA are able to resolve their Dispute, the NCTA will promptly process any required Contract changes.

If either the Design-Build Team or the NCTA rejects the findings and recommendations of the DRB, the Dispute will continue under the applicable provisions of the Contract.

H. Clarification and Reconsideration

Should the dispute remain unresolved because of a request for clarifications of the recommendation or new information or material becomes available which was not available at the time of the presentation, either the Design-Build Team or the NCTA may within the 7 calendar day period following the date of the DRB findings and recommendations, request in writing, by certified mail return receipt requested, that the DRB clarify or reconsider its findings and recommendations. This information shall be supplied simultaneously to the other party.

Should new information be made available, the other party shall have 7 days to review such information and respond appropriately. After that period, the DRB shall promptly notify the Design-Build Team and the NCTA of any changes to DRB findings and recommendations.

I. Admissibility

If the DRB's findings and recommendations do not resolve the Dispute, the Contract, the written findings and recommendations, including any minority report, and the qualifications of the DRB members will be admissible as evidence to the extent permitted by law in any subsequent dispute resolution proceeding or forum to establish (a) that a DRB considered the Dispute, (b) the qualifications of the DRB members, and (c) the DRB's findings and recommendations that resulted from the process.

J. Legal Relations

Each DRB member, in the performance of his or her duties on the DRB, is acting in the capacity of an independent agent and not as an employee of either the Design-Build Team or the NCTA.

Each DRB member is acting in a capacity intended to facilitate resolution of Disputes. Accordingly, the Design-Build Team and the NCTA agree that to the fullest extent permitted by law, each DRB member shall be accorded quasi-judicial immunity for any actions or decisions associated with the review and findings and recommendations of Disputes referred to the DRB. No DRB member may be called as a witness by either the Design-Build Team or the NCTA in subsequent proceedings on the dispute. The DRB shall, upon completion of their findings, turn all records of the DRB over to the NCTA for storage and preservation.

By execution of the Three-Party Agreement, the Design-Build Team and the NCTA agree not to pursue legal proceedings against a DRB member for activities related to or consequences resulting from their participation in the DRB.

PAYMENT

A. Method of Measurement

The Design-Build Team and the NCTA shall equally bear the costs and expenses of the DRB.

The DRB members should not engage in activities related to the project, for which compensation is expected, unless requested by either the NCTA or Design-Build Team.

Time spent at formalized meetings or reviewing the Dispute – Each DRB member will be compensated for actual time spent at the rate of $250 per hour with a maximum of $2,000 per day. This rate shall include all normal incidental expenses such as telephone, fax, postage, courier, printing, and computer services. The DRB activity must be preauthorized by both the Design-Build Team and the NCTA.

Review of Contract Documents, Reports and Information (non-dispute related) – Each DRB member will be compensated for actual review time of the monthly documents provided by the NCTA and Design-Build Team, at a rate of $100 per hour, for a maximum of four (4) hours per month.

Travel Time to and from Preauthorized Meetings – Each DRB member will be compensated for actual travel time to and from DRB meetings at the rate of $50 per hour with a maximum of $200 each way.

Travel Expenses – Travel expenses will be reimbursed at standard NC state rates for transportation, lodging, and meals for each day, or portion thereof, that the DRB member is traveling to or from, or attending, an authorized DRB activity. Expense receipts are required.

The NCTA will provide, at no cost to the Design-Build Team, administrative services such as conference facilities, meeting rooms and copying services during DRB presentations.

The Three Party Agreement and the Special Provisions contain all of the provisions for compensation and expenses of the DRB. All DRB members shall be compensated at the same daily and hourly rate.

Each DRB member may submit invoices for payment for work completed and qualified expenses no more often than once per month during the progress of work. Such invoices shall be in a format approved by the NCTA, and accompanied by a general description of activities performed during that period. The value of work accomplished for payment shall be established from the billing rate and hours expended by the DRB member together with qualified expenses incurred.

The cost records and accounts pertaining to this Agreement shall be kept available for inspection by representatives of the NCTA or Design-Build Team for 5 years after final payment.

No additional compensation for services associated with the DRB, beyond that detailed above, will be provided to the DRB members.

B. Basis of Payment

Payment for accepted work will be made as follows:

The Design-Build Team shall pay the invoices of all DRB members after approval by both the Design-Build Team and the NCTA. The Design-Build Team shall then bill the NCTA for one-half of such invoices, which shall be processed in accordance with Article 104-7 of the 2012 *Standard Specifications for Roads and Structures*.

There shall be no markups applied to expenses connected with the DRB, either by the DRB members or by the Design-Build Team. Regardless of the DRB recommendation, neither the NCTA nor the Design-Build Team shall be entitled to reimbursement of DRB costs from the other party.

If the DRB desires special technical services, both the Design-Build Team and the NCTA must agree to provide the special services following the procedures included in the Dispute Review Board, Review of Disputes, Deliberations section, contained elsewhere in this provision. If such services are approved and rendered, payment will be made under these provisions in accordance with the Dispute Review Board, Review of Disputes, Deliberations section, contained elsewhere in this provision.

These special provisions and the Three Party Agreement contain all of the provisions for compensation and expenses of the DRB. All DRB members shall be compensated at the same daily and hourly rate.

THREE-YEAR GUARANTEE

(10-28-11) SP

GENERAL

The performance of remedial work in conjunction with this provision and guarantee is not an obligation of the Design-Build Team's bond required by G.S. 44A-33.

Definitions:

Warranty Initiation Date **-** The date that constitutes the start date for the warranty term and coincides with the Substantial Completion as determined by NCTA.

Warranty Bond **-** A bond issued by a surety that guarantees that the warranty requirements, including any observation periods extending beyond the Substantial Completion Date will be satisfied.

Breach of Warranty **-** A failure to perform Corrective Work or Immediate Corrective Work in accordance with the provisions contained herein.

Dispute Review Board - The team responsible for resolving disputes between the NCTA and the Design-Build Team regarding any claim of noncompliance with the warranty requirements, as detailed elsewhere within the Contract Documents.

Corrective Work - Work redone, repaired, corrected or replaced pursuant to the terms of this Warranty Provision. This term is used throughout this provision to collectively mean both Corrective Work and Immediate Corrective Work.

Immediate Corrective Work - Work redone, repaired, corrected or replaced that shall be undertaken immediately as it poses an imminent danger to the users of the facilities constructed under this project. If the NCTA determines that Immediate Corrective Work is necessary for public safety, the NCTA or its agent may perform emergency repairs. Prior to such emergency repairs, the NCTA will document the basis for the emergency action and will preserve evidence of the defective condition.

Project Warranty Term

Excluding water and sewer work, the Warranty Term for each element of the Project shall commence upon Substantial Completion, as determined by NCTA, and shall remain in effect for three years thereafter subject to extension under the "Warranty Bond" section of this provision and notwithstanding any warranty term for specific Project elements that may be longer than warranty term set forth herein. The Warranty Term for water and sewer work shall commence once all water and sewer work performed for that owner is accepted and shall remain in effect for three years thereafter subject to extension under the "Warranty Bond" section of this provision and notwithstanding any warranty term for specific Project elements that may be longer than warranty term set forth herein.

These warranties are binding on the Design-Build Team's successors, transferees, heirs, and assigns. If NCTA determines that any of the Work has not met the standards set forth in this Provision at any time within the Warranty Term, then the Design-Build Team shall correct such Work as specified below, even if the performance of such Corrective Work extends beyond the stated Warranty Term.

The Design-Build Team shall be responsible for any and all remediation activities at the on-site stream mitigation site for a period of twelve months following NCTA's final acceptance of the stream mitigation site at no additional cost to the NCTA.

Warranty Bond

The Design-Build Team shall furnish a single term warranty bond from a firm licensed to do business in the State of North Carolina, in an amount of five percent of the total amount bid for the entire project, as a prerequisite of determination of Substantial Completion. This bond will be applicable to the Project Warranty and any specific Project elements that may be set forth elsewhere in this Contract. The warranty bond will be released at the end of the warranty period to include any extension as provided in the "Warranty of Corrective Work" section below. Should such extensions occur on specific project elements, there may be the opportunity to lower the bond amount for such extension to cover the warranty of the Corrective Work. The NCTA will supply the Warranty Bond form upon request.

Initial Project Acceptance

The NCTA and the Design-Build Team shall jointly review all completed Work, or a portion thereof, as determined by the NCTA. If the work does not meet contract requirements, the Design-Build Team shall make all necessary corrections, at their expense, prior to initial acceptance. Initial acceptance will occur as soon as the NCTA confirms in writing, that contract requirements have been met and the Design-Build Team has reached Substantial Completion as defined in the Project Special Provision for "Substantial Completion." The date on which Substantial Completion occurs shall coincide with the Warranty Initiation Date. **Once final acceptance of the Project or portions thereof is attained as defined by the NCTA, routine maintenance of such becomes the responsibility of the NCTA, excluding any items requiring Warranty Corrective Work as detailed within this Provision.**

The date of Substantial Completion/Warranty Initiation Date will be documented and executed jointly by the NCTA and the Design-Build Team with a copy of such being sent to the Design-Build Team's warranty bond surety agent.

The NCTA may accept the work and begin the warranty period, excluding any area needing Corrective Work, to accommodate seasonal limitations or staged construction.

Neither the initial acceptance nor any prior inspection, acceptance or approval by the NCTA diminishes the Design-Build Team's responsibility under this warranty. Acceptance of material, in penalty, under the NCTA's quality assurance program will not relieve the Design-Build Team from meeting the material and workmanship warranty requirements for the accepted material.

Annual Review Process

The NCTA shall employ a private engineering firm to perform an annual review of the pavement and bridge components condition parameters warranted by this Provision. The private engineering firm will perform the appropriate testing, inspections and develop a report with all evaluation data and digital photographical status of the warranted condition parameters. This report will be dated and certified by a Professional Engineer registered in North Carolina. The report will be submitted directly to the NCTA with copies submitted to the Design-Build Team.

Final Warranty Acceptance

The NCTA and the Design-Build Team shall jointly conduct an inspection of the Project prior to expiration of the warranty term and shall produce a punch list of those items which require Corrective Work prior to fulfillment of the warranty obligation. If requirements of this Provision are not met, the Design-Build Team shall make all necessary corrections, at their expense, prior to expiration of the warranty term.

The date upon which the warranty terminates, including any extension as included in the "Warranty of Corrective Work" section will be documented and executed jointly by the NCTA and the Design-Build Team with a copy of such being sent to the Design-Build Team's warranty bond surety agent.

Corrective Work

Within seven calendar days of the Design-Build Team's receipt of NCTA's notice specifying a failure of any Work to satisfy Design-Build Team's Warranties, or any Subcontractor representation, warranty, guarantee or obligation for which the Design-Build Team is responsible to enforce, the Design-Build Team and NCTA shall mutually agree when and how the Design-Build Team shall remedy such violation. However, in the case that Immediate Corrective Work is required, as indicated by NCTA in its notice, the Design-Build Team and NCTA shall agree on a remedy immediately upon notice by NCTA of such need for immediate work**. No Corrective Work shall occur without NCTA knowledge of such activities or operations.**

The NCTA may elect to have the Corrective Work postponed within the warranty term to minimize traffic disruption provided such Corrective Work poses no safety issues to motorists.

If the Design-Build Team does not use its best efforts to proceed to effectuate such remedy within the agreed time, or if the Design-Build Team and NCTA fail to reach such an agreement within such seven calendar day period (or immediately, in the case of Immediate Corrective Work), then NCTA, after notice to the Design-Build Team, shall have the right to perform or have performed by third parties the necessary remedy, and all costs thereof shall be borne by the Design-Build Team.

Requirements originally developed and detailed in the Contract Documents shall apply throughout the warranty term and to all Corrective Work, including lane closure time restrictions and associated liquidated damages. The Design-Build Team shall be responsible for payment, to NCTA, of any liquidated damages incurred during the warranty term resulting from lane closures within the restricted times as detailed in the Contract Documents. If lane closures are required during restricted times to perform Immediate Corrective Work, then the associated liquidated damages shall apply.

The Design-Build Team shall be responsible for obtaining any required permits, approvals or other consents in connection with the Corrective Work.

Warranty of Corrective Work

The Warranties as to each redone, repaired, corrected or replaced element of the Work shall extend beyond the original warranty period, if necessary, to provide at least a one-year warranty period following acceptance of such Corrective Work thereof by NCTA and acceptance thereof by the appropriate owner.

Assignment

Without in any way derogating the Design-Build Team's own representations and warranties and other obligations with respect to all of the Work, the Design-Build Team shall obtain from all Subcontractors and cause to be extended to NCTA, appropriate representations, warranties, guarantees and obligations with respect to the design, materials, workmanship, equipment, tools and supplies furnished by such subcontractor. All representations, warranties, guarantees and obligations of subcontractors shall be written so as to survive all NCTA and Design-Build Team

inspections, tests and approvals, and shall run directly to and be enforceable by the Design-Build Team and/or NCTA, including their respective successors and assigns. The Design-Build Team hereby assigns to NCTA all of the Design-Build Team's rights and interest in all extended warranties for periods exceeding the applicable three year Warranty Term (including extensions thereof under the section "Warranty of Corrective Work" included in this provision.), which are received by the Design-Build Team from any of its subcontractors, suppliers or manufacturers.

Enforcement

Upon receipt from NCTA of notice of a failure, to perform Corrective Work needed to satisfy any subcontractor, supplier or manufacturer warranty, representation, guarantee, or obligation, the Design-Build Team shall enforce or perform any such representation, warranty, guarantee or obligation, in addition to Design-Build Team's other obligations hereunder. NCTA's rights under this section, shall commence at the time such representation, warranty, guarantee or obligation is furnished or at the Substantial Completion, whichever is earlier, and shall continue until the expiration of the Design-Build Team's relevant warranty term (including extensions thereof under the section "Warranty of Corrective Work" included in this provision). Until such expiration, the Design-Build Team shall be responsible for the cost of any equipment, material, labor (including re-engineering) or shipping, and the Design-Build Team shall be required to replace or repair defective equipment, material or workmanship furnished by any subcontractor, supplier or manufacturer.

No Limitation of Liability

The foregoing warranties are in addition to all rights and remedies available under the Contract Documents or applicable law, and shall not limit the Design-Build Team's liability or responsibility imposed by the Contract Documents or applicable law with respect to the Work, including liability for design defects, latent construction defects, strict liability, negligence or fraud; provided, however, that, upon expiration of the Warranties, Design-Build Team shall have no further liability to NCTA hereunder for latent construction defects.

Warranty Beneficiaries

In addition to benefiting NCTA and its successors and assigns, the Warranties and subcontractor warranties provided under the "Initial Project Acceptance" section included in this provision, shall inure to the benefit of, and shall be directly enforceable by the NCTA and Utility Owners with respect to those portions of the Work owned or controlled by each such owner.

Remedies for Breach of Warranty

It is the NCTA's intent to reserve the right to recover any and all actual damages, not subject to liquidated damages, resulting from any breach of an express or implied warranty or any defect in the Work.

Disputes

Any disagreement between NCTA and the Design-Build Team relating to this warranty provision shall be subject to the Dispute Review Board provisions contained in the Contract

Documents and Article 104-8(B) of the 2012 *Standard Specifications for Roads and Structures* provided that Design-Build Team shall proceed as directed by NCTA pending resolution of the dispute.

Should disputed Corrective Work pose a safety issue to the motorist, the NCTA may (1) direct the Design-Build Team to perform the Corrective Work with costs being documented in accordance with Article 109-3 of the 2012 *Standard Specifications for Roads and Structures* and as amended by the Standard Special Provision, Division One, included elsewhere in the RFP; or (2) after notice to the Design-Build Team, the NCTA shall have the right to perform or have performed by third parties the necessary remedy, and all costs thereof shall be borne by responsible party upon resolution of the dispute.

Rights and Responsibilities of the NCTA

The NCTA:

A. Reserves the right to approve the schedule proposed by the Design-Build Team to perform warranty work.

B. Reserves the right to approve all materials and specifications used in warranty work.

C. Reserves the right to determine if warranty work performed by the Design-Build Team meets the contract specifications.

D. Reserves the right to perform, or have performed, routine maintenance during the warranty period, which routine maintenance will not diminish the Design-Build Team's responsibility under the warranty.

E Reserves the right, if the Design-Build Team is unable, to perform Immediate Corrective Work to the pavement to prevent an unsafe road condition as determined by the NCTA. The NCTA will attempt to notify the Design-Build Team that work is required to address an unsafe condition. However, should the Design-Build Team be unable to comply with this requirement, to the NCTA's satisfaction and within the time frame required by the NCTA, the NCTA will perform, or have performed any Immediate Corrective Work deemed necessary. Any such Immediate Corrective Work undertaken will not relieve the Design-Build Team from meeting the warranty requirements of this Provision. Any costs associated with the Immediate Corrective Work will be paid by the Design-Build Team if it is determined the cause was from defective materials and/or workmanship.

F. Is responsible for notifying the Design-Build Team, in writing, of any Corrective Work required to meet the warranty requirements.

Rights and Responsibilities of the Design-Build Team

The Design-Build Team:

A. Shall warrant to the NCTA that the warranted work will be free of defects in materials and workmanship. The warranty bond shall be submitted to the NCTA as a prerequisite of the NCTA determining the project Substantially Complete.

B. Shall be responsible for performing all Corrective Work including, but not limited to, maintaining traffic and restoring all associated pavement features, at the Design-Build Team's expense. Liquidated Damages established in the Contract Documents will be in effect if the proposed traffic plan for Corrective Work requires lane closures during restricted times.

C. Shall be responsible for performing all Corrective Work resulting from being in non-compliance with the warranty requirements, using NCTA approved materials and methods.

D. Shall be responsible for performing Corrective Work upon NCTA specifying a failure of any Work to satisfy Design-Build Team's Warranties, unless otherwise directed.

E. Shall notify the NCTA and submit a written course of action for performing the needed Corrective Work a minimum of seven calendar days prior to commencement of Corrective Work, except in the case of Immediate Corrective Work as detailed in this special provision. The submittal must propose a schedule for performing the Corrective Work and the materials and methods to be used.

F. Shall submit a traffic control plan and have said plan approved by the NCTA prior to performing Corrective Work and shall adhere to that plan while performing the work.

G. Shall complete all Corrective Work prior to conclusion of the warranty period, or as otherwise agreed to by the NCTA.

H. Shall be liable during the warranty period in the same manner as Design-Build Teams are currently liable for their construction related activities with the NCTA pursuant to the NCDOT 2012 *Standard Specification for Roads and Structures* and the Standard Special Provisions, Division One, as included elsewhere in the RFP. This liability shall arise and continue only during the period when the Design-Build Team is performing Corrective Work. This liability is in addition to the Design-Build Team performing and/or paying for any required Corrective Work, and shall include liability for injuries and/ or damages and any expenses resulting therefrom which are not attributable to normal wear and tear of traffic and weather, but are due to non-compliant materials, faulty workmanship, and to the operations of the Design-Build Team.

Non-Extension of Contract

This Provision shall not be construed as extending or otherwise affecting the claim process and statute of limitation applicable to this Contract.

Measurement and Payment

All costs associated with this warranty provision, regardless of when such costs are incurred throughout the warranty term of any extensions as provided in the "Warranty of Corrective Work" section included in this provision, shall be included in the lump sum price bid for the project. These costs include but are not limited to, all bonding, engineering, Corrective Work, traffic control, additional testing and inspections, materials, labor and equipment and incidentals necessary to complete and fulfill the requirements herein of this Contract.

The Design-Build Team shall reimburse NCTA for any expenses made necessary by any Corrective Work. Payment shall be provided within 10 Days after the Design-Build Team's receipt of invoice, therefore.

PROJECT WARRANTY

Design-Build Team warrants that:

A. the Work, as completed for the Project, meets all of the requirements of the Contract Documents;

B. the Plans, details and /or drawings selected or prepared for use during construction are appropriate for their intended use;

C. all Plans furnished pursuant to the Contract Documents conform to all professional engineering principles generally accepted as standards of the industry in North Carolina;

D. all Work is performed in accordance with the Released for Construction plans;

E. all Work is in reasonably close conformity with the lines, grades, cross sections, dimensions, and material requirements, including tolerances shown in the contract, unless otherwise documented in a mutually agreeable executed agreement between the NCTA and the Design-Build Team which details the acceptance of the Work in accordance with Article 105-3 of the 2012 *Standard Specifications for Roads and Structures* and as amended in the Standard Special Provisions, Division One, included elsewhere in this RFP.

   No price adjustment or payment made in connection with acceptance of materials or Work pursuant to the Contract Documents or any agreement between the Design-Build Team and NCTA to accept Work, which is not in close conformity, shall in any manner, excuse, waive, impair or negate the warranties described herein or the Design Build Team's obligation or responsibility for such warranties.

   This warranty provision shall in no way relieve the requirement for the initial Work to meet the requirements of the Contract Documents prior to final acceptance.

F. all materials and equipment furnished under the Contract Documents are of good quality and, when installed, are new;

G. all materials, as installed, are suitable for their intended use with appropriate testing conducted to ensure the materials meets or exceeds requirements of the design as approved by the Engineer of Record, provided all requirements of the Contract are met.

MATERIALS & WORKMANSHIP PAVEMENT WARRANTY

Description

The materials and workmanship pavement warranty shall consist of the warranty bond contained in the "Warranty Bond" section and the terms of this Provision. The warranty criteria presented herein contain information unique to each pavement type and appropriate fix.

Materials & Workmanship Warranty

The Design-Build Team is responsible for correcting defects in the pavement caused by elements within the Design-Build Team's control (i.e., the materials supplied and the workmanship), during the warranty term. Since the NCTA is responsible for the pavement design, the Design-Build Team assumes no responsibility for defects that are design related. If a defect is attributable to both, the materials and/or workmanship and the design, responsibility for correcting the defect shall be shared by the NCTA and the Design-Build Team; the Design-Build Team is responsible for the percentage of fault attributable to the materials and/ or workmanship and the NCTA is responsible for the percentage of fault attributable to the design.

During the warranty period, the Design-Build Team will not be held responsible for pavement distresses that are caused by factors unrelated to materials and workmanship. These include, but are not limited to: chemical and fuel spills, vehicle fires, snow plowing, and quality assurance testing such as coring. Other factors considered to be beyond the control of the Design-Build Team which may contribute to pavement distress will be considered by the Engineer on a case by case basis upon receipt of a written request from the Design-Build Team.

Evaluation Method

Pavement evaluations shall be conducted by dividing the project into segments. Each individual Travel Lane will be divided into segments of 528 feet (1/10 mile) in length for measuring and quantifying the condition parameters.

Travel Lane(s) - The delineated pavement surface used by traffic. The Travel Lanes shall be the portion of the pavement considered warranted work. Each of the following is considered a separate driving lane:

1. Each individual mainline or Y-line lane, for each direction of travel.

2. The sum of all ramps, loops, and the associated acceleration/deceleration lanes are considered a separate driving lane.

3. The sum of all auxiliary lanes, such as passing and turn lanes is considered a separate driving lane.

Approaches, driveways, shoulders and adjoining transition tapers between various types of pavement are not considered driving lanes or addressed under this Section; however, shall be warranted under the "Project Warranty" section, included in this provision.

The beginning point of the initial segment layout will be the Point of Beginning (POB) of the project or construction limits for Y-lines. Segments will be laid out consecutively to the Point of Ending (POE) of the project. The original segmentation of the project will be used for all successive reviews throughout the warranty period.

Warranty Requirements

Corrective Work will be required when the threshold limit for any condition parameter, as detailed in the sections below, is exceeded as a result of a defect in materials and/or workmanship.

To determine whether the failure to meet the warranty requirements is a result of defects in materials and/or workmanship, a joint field investigation by the NCTA and the Design-Build Team will be conducted. The NCTA or Design-Build Team may elect to have a forensic investigation conducted. The decision to undertake a forensic investigation, the scope of it, and the selection of the party to conduct it will be agreed to by the NCTA and the Design-Build Team. The forensic investigation will be conducted by a qualified entity and at an AASHTO certified laboratory with the results being final and binding. If agreement cannot be reached, a Dispute Review Board (DRB) may be convened in accordance with the Contract Documents. The DRB will then decide the need for a forensic investigation, its scope and the party to conduct the investigation. All costs related to the forensic investigation will be shared proportionately between the Design-Build Team and the NCTA based on the determined cause of the pavement problem.

WARRANTY CRITERIA FOR NEW HOT MIX ASPHALT PAVEMENT

Application

This section applies to all components of a multiple lift Hot Mix Asphalt pavement structure placed on stabilized soil or aggregate base course. This section excludes any resurfacing, permeable base course, or partial width (less than 10 feet in width) widening of existing facilities; however, the section "Project Warranty" detailed above shall apply to such asphalt pavement.

Limits of Warranted Work

The warranted work includes all components of a multiple lift hot mix asphalt pavement placed for travel lanes within the project limits, including Y-lines.

Condition Parameters and Threshold Limit

Condition parameters are used to measure the performance of the HMA pavement during the warranty term. Each condition parameter has a threshold limit applied at which time Corrective Work is required.

A. **Transverse Crack** - A crack, at least five feet in length that is oriented primarily in the transverse direction versus the longitudinal direction. That is, the angle between the overall crack line and the transverse line is less than 45 degrees. It can be either straight or irregular.

B. **Longitudinal Crack/Open Joint** - A crack or open joint, at least five feet in length that is oriented primarily in the longitudinal direction versus the transverse direction. That is, the angle between the overall crack line and the centerline is less than 45 degrees. It can exist anywhere in the driving lane; i.e., at the pavement centerline joint, wheel path, center of lane, or lane/shoulder joint.

C. **De-bonding** - A physical separation of two HMA layers. De-bonding will be visually identified as shoving, or the loss of the new surface course. Surface potholes, regardless of depth, will be classified as de-bonding.

D. **Raveling** - Surface disintegration, due to the loss of coarse or fine aggregate material, that occurs over an area or in a continuous longitudinal strip.

E. **Flushing** - The accumulation of excess asphalt binder on the pavement surface that creates a shiny, reflective condition and becomes tacky to the touch at high temperatures.

F. **Rutting** - A longitudinal surface depression in the wheel path. It may have associated transverse displacement or bulging.

G. **Alligator Cracking** - Parallel longitudinal cracks with transverse tears between them exhibiting a pattern similar to an alligator hide. An Alligator Crack typically starts in a wheel path and may extend to other lane locations.

H. **Block Cracking** - Transverse and longitudinal cracking that has progressed to a pattern that the pavement is broken into blocks of size less than 12" by 12". The shape of each block may be irregular.

I. **Popout** - A small piece of pavement, aggregate, or debris greater than 0.25 inch in diameter that has broken loose from the surface.

J. **Ride Quality/ Pavement Smoothness** - Measurement of pavement roughness to establish appropriate ride comfort levels for the motorist on the facility.

K. **Skid Resistance** - the force developed when a tire that is prevented from rotating slides along the pavement surface as tested in accordance with ASTM E274-90.

Warranty Criteria and Recommended Corrective Work

The table below lists the allowable threshold limit for each condition parameter at which time Corrective Work is required, unless otherwise directed.

The Corrective Work detailed is recommended to outline typical acceptable treatments for the various condition parameters. The NCTA will accept the listed Corrective Work if the work addresses the cause of the condition parameter. The Design-Build Team may use an alternative

action subject to NCTA approval. The limits of the Corrective Work shall be approved by NCTA and may include areas that are immediately adjacent to the pavement defect; however, not currently demonstrating defects or the condition parameters detailed above. Any hot mix asphalt requiring removal/replacement to correct deficiencies, for any condition parameter, shall be replaced full-width across the lane.

HOT MIX ASPHALT WARRANTY REQUIREMENTS		
CONDITION PARAMETER	**THRESHOLD LIMIT PER SEGMENT (1) (Length = 528 feet Width = 12 feet)**	**RECOMMENDED CORRECTIVE WORK**
Transverse Cracking	Any transverse crack measuring ≥ 6 feet	Cut and seal
Longitudinal Cracking/ Open Joint	Any longitudinal crack measuring ≥ 25 feet	Cut and seal
Alligator Cracking 7 (Minor)	0 to 4% of segment area	Saw and patch or mill and Resurface affected courses
Alligator Cracking (Major)	≥ 4% of segment area	Mill and resurface affected courses to included subgrade or base repair
Block Cracking (7) (Minor)	0 to 4% of segment area	Saw and patch or mill and resurface affected courses
Block Cracking (Major)	≥ 4% of segment area	Mill and resurface affected courses to included subgrade or base repair
De-bonding (7) (Minor)	0 to 2% of segment area	Saw and patch or mill and resurface affected courses
De-bonding (Major)	≥ 2% of segment area	Mill and Resurface affected courses
Raveling	≥ 8% of segment area	Mill and Resurface affected courses
Flushing	≥ 4% of segment area	Mill and Resurface affected courses
Rutting (3)	25% of segment length having an avg. rut depth ≥ 3/8 inch (2)	Microsurface or Mill and Resurface (6)
Popout	25 individual popouts in segment	Mill and Resurface affected courses
Ride Quality (IRI)	≥ 75(4)	Mill, grind, overlay or replace to bring back to within threshold limit
Skid Resistance	≥ 37(5)	Microsurface or Mill and Resurface (6) to bring back within threshold limit.

(1) Warranty Corrective Work is required upon documentation of the threshold limit being met or exceeded.
(2) The rut depth threshold applies to each wheel path independently.
(3) The pavement surface will be evaluated for the presence of rutting on each driving lane throughout the warranty period. Measurement will be made using a high-speed electronic profilometer. These measurements may be confirmed using a straight rigid device that is a minimum of 7 feet long and of sufficient stiffness that it will not deflect from its own weight.

(4)	The pavement surface will be evaluated for ride quality in each wheel path. IRI measurement will be an average of the left and right wheel paths.
(5)	Skid Number as measured with a locked wheel tester.
(6)	Recommended action is dependent on the depth of the rut susceptible material.
(7)	All alligator cracking, block cracking and debonding are symptomatic of premature pavement failure and require Corrective Work.

WARRANTY CRITERIA FOR NEW JOINTED PORTLAND CEMENT CONCRETE PAVEMENT

Application

This section applies to all components within and the combination thereof to construct new jointed portland cement concrete pavement placed on hot mix asphalt or aggregate base course.

Limits of Warranted Work

The warranted work includes all jointed Portland cement concrete pavement placed for travel lanes within the project limits.

Condition Parameters and Threshold Limit

Condition parameters are used to measure the performance of the concrete pavement during the warranty term. Each condition parameter has a threshold limit applied at which time Corrective Work is required.

A. **Crack** - A visible fissure or surface discontinuity that may or may not extend through the entire slab. Cracks may be singular or in multiple patterns. Crack types are:

1. **Transverse** - A crack, at least five feet in length that is oriented primarily in the transverse direction versus the longitudinal direction. That is, the angle between the overall crack line and the transverse line is less than 45 degrees. It can be either straight or irregular.
2. **Longitudinal** - A crack, at least five feet in length, that is oriented primarily in the longitudinal direction versus the transverse direction. That is, the angle between the overall crack line and the centerline is less than 45 degrees. It can exist anywhere in the driving lane; i.e., at the pavement centerline joint, wheel path, center of lane, or lane/shoulder joint.
3. **Corner** – A crack with orientation generally diagonal and located near a slab corner. It typically intersects both the transverse and longitudinal pavement joints.
4. **Map** - Interconnecting, variable spaced cracks in a random orientation and pattern.
5. **Shrinkage** - A small crack or cracks produced by the loss of contained water during the dehydration process.

B. **Spalling** - Broken or missing piece of concrete contiguous with the perimeter edge of a slab with a surface area exceeding two square inches.

C. **Joint Sealant Failure** - The loss of material integrity consisting of either adhesive failure (debonding), cohesive failure (material separation), or the complete loss of sealant material.

D. **Shattered Slab** - A pavement slab broken into four or more sections by full-depth cracks.

E. **Scaling** - The concrete surface has a visible, exposed, rough texture from a loss of either aggregate or mortar.

F. **Non-function Joint** – Joints or areas within 4 feet of the joint showing distresses include faulting, pumping, spalling, cracking, blowups, and mid-panel cracking or inadequate load transfer.

G. **Ride Quality / Pavement Smoothness** - Measurement of pavement roughness to establish appropriate ride comfort levels for the motorist on the facility.

H. **Skid Resistance -** The force developed when a tire that is prevented from rotating slides along the pavement surface as tested in accordance with ASTM E274-90.

Warranty Criteria and Recommended Corrective Work

The table below lists the allowable threshold limit for each condition parameter at which time Corrective Work is required, unless otherwise directed.

The Corrective Work detailed is recommended to outline typical acceptable treatments for the various condition parameters. The NCTA will accept the listed Corrective Work if the work addresses the cause of the condition parameter. The Design-Build Team may use an alternative action subject to NCTA approval. The limits of the Corrective Work shall be approved by NCTA and may include areas that are immediately adjacent to the pavement defect; however, not currently demonstrating defects or the condition parameters detailed above. Concrete Pavement requiring removal/replacement to correct deficiencies, for any condition parameter, may require the pavement to be replaced full-width across the lane and minimum length of 6 feet to ensure long term durability. NCTA will determine if such full width removal is necessary; however a patch greater than 4 feet in length is typically the maximum allowed prior to patching full width.

PORTLAND CEMENT CONCRETE PAVEMENT WARRANTY REQUIREMENTS		
CONDITION PARAMETER	**THRESHOLD LIMITS PER SEGMENT (1) (Length = 528 feet)**	**RECOMMENDED CORRECTIVE WORK (7) (13)**
Transverse Cracking	Any transverse crack measuring ≥ 6 feet	Remove and replace slab(8) (9)
Longitudinal Cracking	Any longitudinal crack measuring ≥ 8 feet	Remove and replace slab(8) (9)
Corner Cracking	≥ 3 corner cracks within segment	Repair with elastomeric conc.(10)
Map Cracking	≥ 5% of segment area	Remove and replace slab(9)

PORTLAND CEMENT CONCRETE PAVEMENT WARRANTY REQUIREMENTS		
CONDITION PARAMETER	**THRESHOLD LIMITS PER SEGMENT (1) (Length = 528 feet)**	**RECOMMENDED CORRECTIVE WORK (7) (13)**
Shrinkage Cracking	≥ 5% of segment area	Remove and replace
Spalling	≥ 10% of a single 15 slab (2) and ≤ 5 slabs requiring repair (14)	Repair with elastomeric conc.(10)
Joint Sealant Failure	≥ 10% joint length (3) and ≤ 4 slabs requiring repair	Remove and replace seal material(12)
Shattered Slab(4)	Any shattered slab shall be replaced	Full depth removal of slab and replacement
Scaling	≥ 25% of the slab area ≤ 3 slabs within segment	Diamond grind surface(11)
Nonfunctioning Joint(s)	≥ 3 Non-consecutive joints(15)	Remove pavement full depth a minimum 6 feet either side of joint and replace slab and joint
Ride Quality (IRI)	≥ 85(5)	Diamond grind(11), or replace to bring back to within threshold limit
Skid Resistance	≥ 37(6)	Diamond Grind affected area(11)

(1) Warranty Corrective Work is required upon documentation of the threshold limit being met or exceeded.
(2) Can be non-contiguous. 10% value applies to total perimeter (four sides) of the slab.
(3) Applies to all transverse and longitudinal joints on the perimeter of the slab. Noncontiguous lengths will be summed on a per slab basis.
(4) Shattered slabs will not be an acceptable condition, and shall be removed and replaced as approved by the Engineer.
(5) The pavement surface will be evaluated for ride quality in each wheel path. IRI measurement will be an average of the left and right wheel paths.
(6) Skid Number as measured with a locked wheel tester.
(7) If multiple condition parameters are present, the recommended action may be revised. Removal and replacement is required if multiple crack types are present.
(8) The appropriate corrective treatment is dependent on the crack's location and depth.
(9) Dependent on cause.
(10) Repair dependent on area and depth of crack.
(11) Diamond grinding applies to entire slab surface area where corrective action is needed.
(12) Replace with existing material type. Neoprene seals shall be removed and replaced full-width.
(13) All Corrective Work shall be conducted in accordance with the most current procedures and material mixtures recommended by NCDOT Portland Cement Concrete Pavement Repair Manual, unless otherwise approved.
(14) Excessive spall repair throughout the segment may necessitate more substantial repairs to include full depth slab replacement.
(15) Evaluate all joints within defective segment with the MIT Scan. Repairs will be based upon dowel placement and functioning joints within segment.

WARRANTY CRITERIA FOR BRIDGE COMPONENTS

Application

This section applies to the Bridge Deck Surface, Bridge Deck Joints, Bearings, Approach Slab Transitions, and the individual components of such items used in the construction of the Project.

Limits of Warranted Work

The warranted work includes all bridges constructed as part of this Project.

Bridge Deck

Condition Parameters and Threshold Limit

Condition parameters are used to measure the performance of the bridge components during the warranty term. Each condition parameter has a Threshold Limit applied at which time Corrective Work is required

A. **Spalling** - Broken or missing piece of concrete with a surface area exceeding two square inches.

B. **Scaling** - The concrete surface has a visible, exposed, rough texture from a loss of either aggregate or mortar.

C. **Crack** - A visible fissure or surface discontinuity that may or may not extend through the entire slab. Cracks may be singular or in multiple patterns. A map crack is defined as interconnecting, variable spaced cracks in a random orientation and pattern.

D. **Skid Resistance -** The force developed when a tire that is prevented from rotating slides along the pavement surface

Warranty Criteria and Recommended Corrective Work

The table below lists the allowable threshold limit for each condition parameter at which time Corrective Work is required, unless otherwise directed.

The Corrective Work detailed is recommended to outline typical acceptable treatments for the various condition parameters. The NCTA will accept the listed Corrective Work if the work addresses the cause of the condition parameter. The Design-Build Team may use an alternative action subject to NCTA approval. The limits of the Corrective Work shall be approved by NCTA and may include areas that are immediately adjacent to the pavement defect; however, not currently demonstrating defects or the condition parameters detailed above. Concrete Pavement requiring removal/replacement to correct deficiencies, for any condition parameter, may require the pavement to be replaced full-width across the lane and minimum length of 6 feet to ensure long term durability. NCTA will determine if such full width removal is necessary; however a patch greater than 4 feet in length is typically the maximum allowed prior to patching full width.

Listed are the parameters when bridge components are considered defective within the warranty term.

BRIDGE DECK WARRANTY REQUIREMENTS		
CONDITION PARAMETER	**THRESHOLD LIMITS (PER INDIVIDUAL BRIDGE) (1)**	**RECOMMENDED CORRECTIVE WORK (2)(3)**
Deck Scaling (Less than 1/4" deep but greater than 1/8" deep)	≥ 20% of the individual bridge deck surface area	Grind defective area; saw cut transverse grooves; seal surface with an approved sealing agent
Deck Scaling (Greater than 1/4")	≥ 20% of the individual bridge deck surface area	Diamond saw the perimeter and remove a minimum of 1 inch deep or to sound concrete and patch with a latex modified concrete
Spalling (Minor)	Repair spalling ≤ 1/2" deep or ≤ 1 square foot	Diamond saw the perimeter and remove a minimum 1 inch deep or to sound concrete; patch with conventional concrete mix or elastomeric concrete
Spalling (Major)	Repair spalling > 1/2" deep or > 1 square foot	Mill or Hydro demolition a minimum 1" deep or to sound concrete; repair with latex modified concrete
Cracking (Map cracking)	0% to 20% of deck surface	Seal surface with an approved sealing agent
Cracking (Map cracking)	Greater than 20% of deck	Mill or Hydro demolition a minimum 1" deep or to sound concrete; repair with latex modified concrete
(1) Warranty Corrective Work is required upon documentation of the threshold limit being met or exceeded. (2) Repairs are dependent upon size, depth and cause; therefore, all corrective work shall be approved by NCTA. (3) If amount of deck repair exceeds 40% of deck surface area, then corrective work shall be performed to entire deck area, unless otherwise directed.		

Bridge Deck Joints

Bridge Deck Joints shall include all components of the joint and joint system to include any protective armoring. Bridge deck joints will be considered defective if any of the following conditions are discovered within the warranty term and shall require Corrective Work.

A. Water leakage through the joint;

B. Separation of the seal from the steel or concrete substrate;

C. Failure of bridge deck joint;

D. Sagging of elastomeric seal;

E. Spalling or delamination of the deck concrete within two feet, either side of the joint.

Corrective Work Required – Defective bridge deck joints shall be restored to a "new condition", meeting the original contract and design requirements, in a manner approved by the NCTA.

Bridge Bearings

Bearings shall be considered defective if any of the following conditions are discovered within the warranty term.

A. There is evidence of failure of any of the components of the bearing assembly;
B. The protective coating of the bearing cracks, checks or peels or rusting is present; or
C. The bearing freezes or otherwise fails to allow the bridge to move as designed.

Corrective Work Required- Bearings shall be removed and either replaced or restored to "new condition," meeting the original contract and design requirements, in a manner approved by the NCTA.

Bridge Approach Transition

Bridge Approach Transitions shall be defined as the transition from the roadway pavement onto the bridge approach slab, as shall include the bridge approach slab and adjacent roadway pavement. The Bridge Approach Transition shall be considered defective when the distance as measured with a 10 foot straightedge deviates from a planar surface by more than ½ inch.

Corrective Work Required- Diamond grind, overlay*, grout, or remove and replace the pavement and or the bridge approach slab, as approved by NCTA, to bring the bridge approach transition back to within the ½ inch tolerance.

* only allowed for Hot Mix Asphalt Pavements

CLEARING AND GRUBBING

(9-1-11) DB2 R01

The North Carolina Turnpike Authority is committed to limiting environmental impacts of the project to the extent practicable. Upland forests, which provide habitat for terrestrial wildlife, are instrumental in protecting water and air quality and are one of the natural resources that the NCTA includes in this commitment. For these reasons NCTA is requiring the Design-Build Team to identify and subsequently protect existing upland forests from disturbance within the project right-of-way where feasible. Project safety, constructability and long term project maintenance are not to be compromised in order to implement this commitment. To this end the Design-Build Team shall:

- Identify in the designs the locations where upland trees will be preserved to include quadrants, the median (outside clear recovery zone) and any other locations within the right of way;
- Schedule, coordinate with NCTA, and attend one meeting that may include representatives from the NCTA, FHWA, USEPA, NCDOT, and other agencies to review the recommended areas for upland tree preservation and discuss the methodology for

determining these locations. The meeting shall occur prior to beginning land clearing of any section of the project.

- Provide the approach and management plans for implementing the upland forest protection plan in the field with the various contractors and subcontractors;
- Implement the plan such that all project personnel are aware of these upland tree protective zones until the entire project is accepted; and
- Schedule, coordinate with NCTA, and attend additional meetings regarding upland forest preservation areas, if it is determined during construction that conditions have changed such that the upland forest preservation areas identified in the design must be modified.

With the exception of areas with Permanent Utility Easements, perform clearing on this project to the limits established by Method "III" shown on Standard No. 200.02 or 200.03 of the 2012 *NCDOT Roadway Standard Drawings*. In areas with Permanent Utility Easements, clearing shall extend to the Right of Way limits.

EROSION & SEDIMENT CONTROL / STORMWATER CERTIFICATION

(1-16-07) (Rev 11-16-10) DB1 G180

General

The NCTA recognizes the imperative need to have qualified individuals designing, constructing, maintaining, and performing oversight of erosion and sediment control/stormwater components within all transportation facility projects. This accountability and competence is required to assure that the environmental commitments into which the NCTA has entered are in conformity with the requirements of the approved plans, specifications, and permit conditions. To ensure that candidates are qualified to construct, maintain, and oversee environmental related operations, certification programs have established written and/or proficiency standards. The certification issued jointly by the North Carolina Department of Transportation and North Carolina State University is a privileged certification that should be held in high regard.

Due to the length of the project and to ensure full compliance of the NCDOT erosion control program, the Design-Build Team shall divide the project into four (4) approximately equal segments and assign a Certified Supervisor and appropriate erosion control installation and maintenance crews to each segment. This segmenting of the project will facilitate a more focused erosion and sediment control review and direct accountability. It is the NCTA's expectation that seeding and mulching crew(s) are retained on the project during grading operations.

Schedule and conduct construction activities in a manner that will minimize soil erosion and the resulting sedimentation and turbidity of surface waters. Comply with the requirements herein regardless of whether or not a National Pollutant Discharge Elimination System (NPDES) permit for the work is required.

Establish a chain of responsibility for operations and subcontractors' operations to ensure that the *Erosion and Sediment Control / Stormwater Pollution Prevention Plan* is implemented and maintained over the life of the contract.

(A) *Certified Supervisor* – Provide a certified Erosion and Sediment Control / Stormwater (E&SC/SW) Supervisor to manage the Design-Build Team and subcontractor(s) operations, ensure compliance with Federal, State and Local ordinances and regulations, and to manage the Quality Control Program.

(B) *Certified Foreman* – Provide a certified, trained foreman for each construction operation that increases the potential for soil erosion or the possible sedimentation and turbidity of surface waters.

(C) *Certified Installer* – Provide a certified installer to install or direct the installation for erosion and sediment control / stormwater practices.

(D) *Certified Designer* – Provide a certified designer for the design of the erosion and sediment control / stormwater component of reclamation plans and, if applicable, for the design of the project erosion and sediment control / stormwater plan.

In the case of difference of opinion or interpretation of plan or contract requirements between the Design-Build Team and the Engineer, the Engineer's determination and decision will be final.

Roles and Responsibilities

(A) *Certified Erosion and Sediment Control / Stormwater Supervisor* - The Certified Supervisor shall be Level II and responsible for ensuring erosion and sediment control / stormwater plan is adequately implemented and maintained on the project and for conducting the quality control program. The Certified Supervisor shall be on the project within 24 hours' notice from initial exposure of an erodible surface to the project's final acceptance. Perform the following duties:

(1)

(a) Manage Operations - Coordinate and schedule the work of subcontractors so that erosion and sediment control / stormwater measures are fully executed for each operation and in a timely manner over the duration of the contract.
(b) Prepare the required National Pollutant Discharge Elimination System (NPDES) Inspection Record and submit to the Engineer.
(c) Attend all weekly or monthly construction meetings to discuss the findings of the NPDES inspection and other related issues.
(d) Implement the erosion and sediment control / stormwater site plans requested.
(e) Provide any needed erosion and sediment control / stormwater practices for the Design-Build Team's temporary work not shown on the plans, such as, but not limited to work platforms, temporary construction, pumping operations, plant and storage yards, and cofferdams.
(f) Acquire applicable permits and comply with requirements for borrow pits, dewatering, and any temporary work conducted by the Design-Build Team in jurisdictional areas.
(g) Conduct all erosion and sediment control / stormwater work in a timely and workmanlike manner.

(h) Fully perform and install erosion and sediment control / stormwater work prior to suspension of the work.
(i) Coordinate with NCTA, NCDOT, Federal, State and Local Regulatory agencies on resolution of erosion and sediment control / stormwater issues due to the Design-Build Team's operations.
(j) Ensure that proper cleanup occurs from vehicle tracking on paved surfaces and / or any location where sediment leaves the Right-of-Way.
(k) Have available a set of erosion and sediment control/stormwater plans that are initialed and include the installation date of Best Management Practices. These practices shall include temporary and permanent groundcover and be properly updated to reflect necessary plan and field changes for use and review by NCTA and NCDOT personnel as well as regulatory agencies.

(2) Requirements set forth under the NPDES Permit – The Department's NPDES Stormwater permit (NCS000250) outlines certain objectives and management measures pertaining to construction activities. The permit references *NCG010000, General Permit to Discharge Stormwater* under the NPDES, and states that the Department shall incorporate the applicable requirements into its delegated Erosion and Sediment Control Program for construction activities disturbing one or more acres of land. The Department further incorporates these requirements on all contracted bridge and culvert work at jurisdictional waters, regardless of size. Some of the requirements are, but are not limited to:

(a) Control project site waste to prevent contamination of surface or ground waters of the state, i.e. from equipment operations/maintenance construction materials, concrete washout, chemicals, litter, fuels, lubricants, coolants, hydraulic fluids, any other petroleum products, and sanitary waste.
(b) Inspect erosion and sediment control / stormwater devices and stormwater discharge outfalls at least once every 7 calendar days, twice weekly for construction related Federal Clean Water Act, Section 303(d) impaired streams with turbidity violations, and within 24 hours after a significant rainfall event of 0.5 inches within a 24-hour period.
(c) Maintain an onsite rain gauge or use the NCDOT's Multi-Sensor Precipitation Estimate website to maintain a daily record of rainfall amounts and dates.
(d) Maintain erosion and sediment control / stormwater inspection records for review by NCTA, NCDOT and Regulatory personnel upon request.
(e) Implement approved reclamation plans on all borrow pits, waste sites and staging areas.
(f) Maintain a log of turbidity test results as outlined in the NCDOT's Procedure for Monitoring Borrow Pit Discharge.
(g) Provide secondary containment for bulk storage of liquid materials.
(h) Provide training for employees concerning general erosion and sediment control / stormwater awareness, the NCDOT's NPDES Stormwater Permit NCS000250 requirements, and the requirements of the *General Permit, NCG010000*.
(i) Report violations of the NPDES permit to the Engineer immediately who will notify the Division of Water Quality Regional Office within 24 hours of becoming aware of the violation.

(3) In accordance with NCTA's NPDES Permit, Contractors involved in construction and maintenance activities shall receive training in stormwater pollution prevention awareness. Appropriate training will be provided to the Design-Build Team's appropriate staff based upon their role in the project. The NCTA approved training shall encompass the following on an annual basis:

- General stormwater awareness
- NPDES Stormwater permit NCG01000 implementation
- Ientification of stormwater pollution potential
- Appropriate spill response actions
- Reporting/ documenting procedures for spills
- Identification of illicit discharge and illegal dumping activities
- Reporting/documenting procedures for illicit discharge and illegal dumping activities
- Contacts for reporting spills and illicit connections/illegal dumping
- General erosion and sediment control
- Proper utilization of the *NCDOT Turbidity Reduction Options for Borrow Pits Matrix*, including inspection and maintenance of borrow pits.

(4) Quality Control Program - Maintain a quality control program to control erosion, prevent sedimentation and follow provisions/conditions of permits. The quality control program shall:

(a) Follow permit requirements related to the Design-Build Team and subcontractors' construction activities.
(b) Ensure that all operators and / or subcontractor(s) on site have the proper erosion and sediment control / stormwater certification.
(c) Notify the Engineer when the required certified erosion and sediment control / stormwater personnel are not available on the job site when needed.
(d) Conduct the inspections required by the NPDES permit.
(e) Take corrective actions in the proper timeframe as required by the NPDES permit for problem areas identified during the NPDES inspections.
(f) Incorporate erosion control into the work in a timely manner and stabilize disturbed areas with mulch / seed or vegetative cover on a section-by-section basis.
(g) Use flocculants approved by state regulatory authorities where appropriate and where required for turbidity and sedimentation reduction.
(h) Ensure proper installation and maintenance of temporary erosion and sediment control devices.
(i) Remove temporary erosion or sediment control devices when they are no longer necessary as agreed upon by the Engineer.
(j) The Design-Build Team's quality control and inspection procedures shall be subject to review by the Engineer. Maintain NPDES inspection records and make records available at all times for verification by the Engineer.

(B) *Certified Foreman* - At least one Certified Foreman shall be onsite for each type of work listed herein during the respective construction activities to control erosion, prevent sedimentation and follow permit provisions:

(1) Foreman in charge of grading activities
(2) Foreman in charge of bridge or culvert construction over jurisdictional areas
(3) Foreman in charge of utility activities

The Design-Build Team may request to use the same person as the Level II Supervisor and Level II Foreman. This person shall be onsite whenever construction activities as described above are taking place. This request shall be approved by the Engineer prior to work beginning.

The Design-Build Team may request to name a single Level II Foreman to oversee multiple construction activities on small bridge or culvert replacement projects. This request shall be approved by the Engineer prior to work beginning.

(C) *Certified Installers* - Provide at least one onsite, Level I Certified Installer for each of the following erosion and sediment control / stormwater crew:

(1) Seeding and Mulching
(2) Temporary Seeding
(3) Temporary Mulching
(4) Sodding
(5) Silt fence or other perimeter erosion / sediment control device installations
(6) Erosion control blanket installation
(7) Hydraulic tackifier installation
(8) Turbidity curtain installation
(9) Rock ditch check / sediment dam installation
(10) Ditch liner / matting installation
(11) Inlet protection
(12) Riprap placement
(13) Stormwater BMP installations (such as but not limited to level spreaders, retention / detention devices)
(14) Pipe installations within jurisdictional areas

If a Level I *Certified Installer* is not onsite, the Design-Build Team may substitute a Level II Foreman for a Level I Installer, provided the Level II Foreman is not tasked to another crew requiring Level II Foreman oversight.

(D) *Certified Designer* – Include the certification number of the Level III-B Certified Designer on the erosion and sediment control / stormwater component of all reclamation plans and if applicable, the certification number of the Level III-A Certified Designer on the design of the project erosion and sediment control / stormwater plan.

Preconstruction Meeting

Furnish the names of the *Certified Erosion and Sediment Control / Stormwater Supervisor, Certified Foremen, Certified Installers and Certified Designers* and notify the Engineer in writing of changes in certified personnel over the life of the contract within 2 days of change.

Ethical Responsibility

Any company performing work for the NCTA or NCDOT has the ethical responsibility to fully disclose any reprimand or dismissal of an employee resulting from improper testing or falsification of records.

Revocation or Suspension of Certification

Upon recommendation of NCTA's Chief Engineer to the NCDOT and/or the certification entity, certification for Supervisor, Certified Foreman, Certified Installer and Certified may be revoked or suspended with the issuance of an Immediate Corrective Action (ICA), Notice of Violation (NOV), or Cease and Desist Order for erosion and sediment control / stormwater related issues. In such case, the NCTA Chief Engineer reserves the right to require the Design-Build Team to replace the personnel responsible for the citation.

Should any of the following circumstances occur, NCTA's Chief Engineer may recommend to NCDOT suspension or permanent revocation of such certification. In addition, the NCTA reserves the right to require the Design-Build Team to replace the personnel responsible.

(A) Failure to adequately perform the duties as defined within the certification provision
(B) Issuance of an ICA, NOV, or Cease and Desist Order
(C) Failure to fully perform environmental commitments as detailed within the permit conditions and specifications
(D) Demonstration of erroneous documentation or reporting techniques
(E) Cheating or copying another candidate's work on an examination
(F) Intentional falsification of records
(G) Directing a subordinate under direct or indirect supervision to perform any of the above actions
(H) Dismissal from a company for any of the above reasons
(I) Suspension or revocation of one's certification by another entity

Suspension or revocation of a certification will be sent by certified mail to the registrant and the Corporate Head of the company that employs the registrant.

A certificant has the right to appeal any adverse action which results in suspension or permanent revocation of certification by responding, in writing, to the NCTA's Chief Engineer within 10 calendar days after receiving notice of the proposed adverse action.

NCTA Chief Engineer
1 South Wilmington Street
Raleigh, NC 27601

Failure to appeal within 10 calendar days will result in the proposed adverse action becoming effective on the date specified on the certified notice. Failure to appeal within the time specified will result in a waiver of all future appeal rights regarding the adverse action taken. The certificant will not be allowed to perform duties associated with the certification during the appeal process.

The NCTA's Chief Engineer will hear the appeal and make a decision within 7 days of hearing the appeal. The decision of the NCTA's Chief Engineer will be final and will be made in writing to the certificant.

If a certification is temporarily suspended, the certificant shall pass any applicable written examination and any proficiency examination, at the conclusion of the specified suspension period, prior to having the certification reinstated.

Measurement and Payment

Certified Erosion and Sediment Control / Stormwater Supervisor, Certified Foremen, Certified Installers and *Certified Designer* will be incidental to the project for which no direct compensation will be made.

WASTE REDUCTION INITIATIVES

(10-28-11) SP

In concert with the recycling provisions contained elsewhere within the RFP, the Design-Build Team is encouraged to take steps to reduce the overall waste materials of all kinds from the project with the ultimate goal of creating a "zero waste" project. This provision does not specifically dictate that the Design-Build Team create a zero waste project. The intent of this provision is to encourage the Design-Build Team to find reuse opportunities where economically reasonable.

Once the alignment and grade plans are approved, the Design-Build Team shall review the project impact area, to include all easements and right of way, and identify all structures and buildings that are to be removed as part of this project (including those partially contained within right of way and easements). Once identified, the Design-Build Team is encouraged to work with local charitable organizations such as Habitat for Humanity and Builders of Hope to find reuse opportunities for the structures or components of the structures.

Develop a preliminary estimate of the waste materials expected to be generated from the project, including the probable origin, type, and quantities of waste materials projected from any demolition for any project component including vegetative removal. Evaluate the projected materials expected to be used in the new construction and develop a preliminary listing of new construction/renovation project materials quantities for comparison to the properties and quantities of potentially available recycle/reuse materials that might be incorporated into and/or around the new construction.

Evaluate the opportunity to develop a potential on-site program for processing recycle/reuse materials for implementation during the project construction phase. Evaluate the potential for on-site composting of materials for later use in seeding and erosion control applications. Initiate

on-site opportunities to incorporate as much of the environmentally permissible recycle/reuse materials into the project as reasonable and feasible. Identify the best method for on-site handling storage of the waste stream materials.

For waste materials not incorporated into the project, evaluate available alternate recycling/reuse locations for "waste materials". Research local and regional recycling/reuse markets for the key materials identified, realizing that the uses of the materials in off-site reuse/recycling opportunities will be regionally dependent. It is the desire of the NCTA that all roadway materials (aggregate, concrete, asphalt) removed under this project be recycled for reuse on this project if economically feasible.

Prior to commencing any demolition operations, provide the NCTA a comprehensive waste management plan that addresses the items detailed above and outlines in detail the Design-Build Team's plan for recycling/ reuse of waste materials.

PROCEDURE FOR MONITORING BORROW PIT DISCHARGE

(2-20-07) DB1 G181

Water discharge from borrow pit sites shall not cause surface waters to exceed 50 NTUs (nephelometric turbidity unit) in streams not designated as trout waters and 10 NTUs in streams, lakes or reservoirs designated as trout waters. For lakes and reservoirs not designated as trout waters, the turbidity shall not exceed 25 NTUs. If the turbidity exceeds these levels due to natural background conditions, the existing turbidity level shall not be increased.

If during any operating day, the downstream water quality exceeds the standard, the Design-Build Team shall do all of the following:

(A) Either cease discharge or modify the discharge volume or turbidity levels to bring the downstream turbidity levels into compliance, or

(B) Evaluate the upstream conditions to determine if the exceedance of the standard is due to natural background conditions. If the background turbidity measurements exceed the standard, operation of the pit and discharge can continue as long as the stream turbidity levels are not increased due to the discharge.

(C) Measure and record the turbidity test results (time, date and sampler) at all defined sampling locations 30 minutes after startup and at a minimum, one additional sampling of all sampling locations during that 24-hour period in which the borrow pit is discharging.

(D) Notify DWQ within 24 hours of any stream turbidity standard exceedances that are not brought into compliance.

During the Environmental Assessment required by Article 230-4 of the 2012 *Standard Specifications for Roads and Structures*, the Design-Build Team shall define the point at which the discharge enters into the State's surface waters and the appropriate sampling locations. Sampling locations shall include points upstream and downstream from the point at which the discharge enters these waters. Upstream sampling location shall be located so that it is not influenced by backwater conditions and represents natural background conditions. Downstream

sampling location shall be located at the point where complete mixing of the discharge and receiving water has occurred.

The discharge shall be closely monitored when water from the dewatering activities is introduced into jurisdictional wetlands. Any time visible sedimentation (deposition of sediment) on the wetland surface is observed, the dewatering activity shall be suspended until turbidity levels in the stilling basin can be reduced to a level where sediment deposition does not occur. Staining of wetland surfaces from suspended clay particles, occurring after evaporation or infiltration, does not constitute sedimentation. No activities shall occur in wetlands that adversely affect the functioning of a wetland. Visible sedimentation shall be considered an indication of possible adverse impacts on wetland use.

The Engineer shall perform independent turbidity tests on a random basis. These results shall be maintained in a log within the project records. Records shall include, at a minimum, turbidity test results, time, date and name of sampler. Should the Engineer's test results exceed those of the Design-Build Team's test results, an immediate test shall be performed jointly with the results superceding the previous test results of both NCTA and / or NCDOT and the Design-Build Team.

The Design-Build Team shall use the *NCDOT Turbidity Reduction Options for Borrow Pits Matrix,* available at **http://www.ncdot.org/doh/preconstruct/ps/contracts/letting.html** to plan, design, construct, and maintain BMPs to address water quality standards. Tier I Methods include stilling basins which are standard compensatory BMPs. Other Tier I methods are noncompensatory and shall be used when needed to meet the stream turbidity standards. Tier II Methods are also noncompensatory and are options that may be needed for protection of rare or unique resources or where special environmental conditions exist at the site which have led to additional requirements being placed in the DWQ's 401 Certifications and approval letters, Isolated Wetland Permits, Riparian Buffer Authorization or a DOT Reclamation Plan's Environmental Assessment for the specific site. Should the Design-Build Team exhaust all Tier I Methods on a site exclusive of rare or unique resources or special environmental conditions, Tier II Methods may be required by regulators on a case by case basis per supplemental agreement.

The Design-Build Team may use cation exchange capacity (CEC) values from proposed site borings to plan and develop the Price Proposal for the project. CEC values exceeding 15 milliequivalents per 100 grams of soil may indicate a high potential for turbidity and should be avoided when dewatering into surface water is proposed.

No additional compensation for monitoring borrow pit discharge shall be paid.

BURNING RESTRICTIONS

(7-1-95) DB2 R05

Open burning is not permitted on any portion of the right-of-way limits established for this project. The Design-Build Team shall not burn the clearing, grubbing or demolition debris designated for disposal and generated from the project at locations within the project limits, off the project limits or at any waste or borrow sites in these counties. The Design-Build Team shall

dispose of the clearing, grubbing and demolition debris by means other than burning and in accordance with state and local rules and regulations.

BUILDING AND APPURTENANCE REMOVAL / DEMOLITION

(9-1-11) DB2 R12A

Unless otherwise as agreed upon by the Department, seal all wells and remove or demolish all buildings and appurtenances, in their entirety, that are located either partially or completely within the project's right of way limits or are located outside the project's right of way limits but within property purchased as an uneconomical remnant in accordance with Sections 205, 210 and 215 of the 2012 *Standard Specifications for Roads and Structures.*

The Department will perform all assessment, removal and disposal of asbestos.

REINFORCED CONCRETE PIPE DESIGN

(9-1-11) DB3 R006

Description

This work consists of the design and manufacture of reinforced concrete pipes which require fills greater than 40 feet and less than or equal to 80 feet.

Materials

(A) Design

When the design of a reinforced concrete pipe is required on the plans developed by the Design-Build Team, design the reinforced concrete pipe in accordance with the current edition of the AASHTO LRFD Bridge Design Specifications. Provide the diameter of pipe as indicated on the plans developed by the Design-Build Team and manufacture the pipe in accordance with ASTM C1417. Provide a reinforced concrete pipe that meets the requirements of Section 1032-6, Section 1077 and any other applicable parts of the 2012 *Standard Specifications for Roads and Structures*.

The design of the reinforced concrete pipe shall be the Design-Build Team's responsibility and is subject to review, comments and approval. Submit two sets of detailed plans for review and acceptance. Include all details in the plans, including the size and spacing of the required reinforcement necessary to fabricate the reinforced concrete pipe. Include checked design calculations for the reinforced concrete pipe. Have a North Carolina Registered Professional Engineer seal the plans and design calculations. After the plans are reviewed and, if necessary, all corrections made, submit one set of reproducible tracings on 22" x 34" sheets to become part of the plans developed by the Design-Build Team.

(B) Reinforced Concrete Pipe Sections

(1) Class

Reinforced concrete pipe sections manufactured in accordance with this Special Provision are designated by inside pipe diameter and design earth cover.

(2) Design Criteria

The design of the reinforced concrete pipe shall be in accordance with Article 12.10.4.2 "Direct Design Method" of the current edition of the AASHTO LRFD Bridge Design Specifications. The following assumptions shall be used in the design calculations:

NCDOT Criteria for Direct Design Method
Process and Material Factors Radial Tension, F_{rp}=1.0 Shear Strength, F_{vp}=1.0
Design Concrete Strength - f'_c 5,000 psi < f'c < 7,000 psi
Heger Pressure Distribution - Type 2 Installation Vertical Arching Factor = 1.40 Horizontal Arching Factor = 0.40
Soil Unit Weight = 120 lb / ft^3
Depth of Fluid = Inside Pipe Diameter
Minimum Concrete Cover = 1.00"
Crack Control = 0.90 (maximum)

(C) Joints

Produce the reinforced concrete pipe sections with spigot and bell ends. Design and form the ends of the pipe section so, when the sections are laid together, they make a continuous line of pipe with a smooth interior free of appreciable irregularities in the flow line, and compatible with the permissible variations given in the 2012 *Standard Specifications for Roads and Structures* and ASTM C 1417.

(D) Manufacture

In addition to the requirements of the 2012 *Standard Specifications for Roads and Structures* and ASTM C 1417, devices or holes are permitted in each pipe section for the purpose of handling and placement. Submit details of handling devices or holes for approval and do not cast any concrete until approval is granted. Remove all handling devices flush with concrete surfaces as directed. Fill holes in a neat and workmanlike manner with an approved non-metallic non-shrink grout, concrete or plug.

DRAINAGE PIPE

(9-1-11) DB3 R36

Description

Where shown in the plans developed by the Design-Build Team, the Contractor shall use Reinforced Concrete Pipe, Corrugated Aluminum Alloy Pipe, Aluminized Corrugated Steel Pipe,

Corrugated Polyethylene Pipe (HDPE Pipe) or Polyvinyl-Chloride Pipe (PVC Pipe) in accordance with the following requirements:

All pipe types are subject to the maximum and minimum fill height requirements as found on Roadway Standard Drawing 300.01 - Sheet 3 of 3. The appropriate Reinforced Concrete Pipe class and the appropriate gage thickness for Corrugated Aluminum Alloy Pipe and Aluminized Corrugated Steel Pipe shall be selected based on fill height.

Site specific conditions may limit a particular material beyond what is identified in this Special Provision. These conditions include, but are not limited to, abrasion, environmental, soil resistivity and pH, high ground water and special loading conditions. The Design-Build Team shall determine if additional restrictions are necessary.

Slope drains shall be Corrugated Aluminum Alloy Pipe, Aluminized Corrugated Steel Pipe, Corrugated Polyethylene Pipe (HDPE Pipe) or Polyvinyl-Chloride Pipe (PVC Pipe).

Transverse median drains, storm drainage system pipes, and open-ended cross drains shall be Reinforced Concrete Pipe unless the pipe slope is greater than 10%, in which case the pipe shall be either Corrugated Aluminum Alloy Pipe or Aluminized Corrugated Steel Pipe.

CEMENT AND LIME STABILIZATION OF SUB-GRADE SOILS

(9-1-11) DB5 R21

General

The Design-Build Team shall be responsible for the following:

1. Performing all laboratory tests in a laboratory certified by the AMRL / NCDOT Laboratory Proficiency Program
2. Sampling Sub-grade soils
3. Conducting Laboratory tests to determine:
   a. Soil classifications
   b. Moisture-density relationships
   c. Quantity of lime or cement required to achieve specified strengths
4. Designating areas to be stabilized by either lime or cement and the required rates of application
5. Conducting field tests to determine unconfined compressive strength

Sampling

The Design-Build Team shall take soil samples, after the project has been graded to within 2 inches of final sub-grade elevation. The Design-Build Team shall sample the top 8 inches at a minimum frequency of one sample per 1,000 feet, per each lane, for classification tests; and one sample per 3,000 feet, per each lane, for moisture density tests and lime or cement mix design tests. Additional samples shall be taken to ensure that all the predominant soil types, limits of distribution of these soils and different site conditions have been represented.

Classification Tests

The Design-Build Team shall perform the following tests to determine AASHTO classifications of different soils in accordance with AASHTO specifications as modified by NCDOT. Copies of these modified procedures can be obtained from Materials and Test Unit's Soils Laboratory.

TABLE 1	
TEST	**AASHTO DESIGNATION**
Dry Preparation of Disturbed Soils	T-87
Particle Size Analysis of Soils	T-88
Determining the Liquid Limit of Soils	T-89
Determining the Plastic Limit and Plasticity Index of Soils	T-90

Moisture Density Test

Based on the criteria set in Table 2, below, the Design-Build Team shall perform the Moisture Density Tests, using either lime or cement. The Design-Build Team shall use 10% cement by weight in soil cement and 4% lime by weight, in soil-lime mixtures. The Design-Build Team shall conduct the tests in accordance with AASHTO T-99, and T-134 for soil-lime and soil-cement mixtures, respectively. In each case, The Design-Build Team shall determine the maximum dry density and optimum moisture content.

TABLE 2 CRITERIA FOR SELECTING LIME OR CEMENT		
PROPERTY	**A**	**B**
Percent passing #200 Sieve	35 Max	36 Min
Liquid Limit	40 Max	41 Min
Plasticity Index	10 Max	25 Min

The Design-Build Team shall use cement for all soils meeting criteria in Column A and lime for all soils meeting criteria in Column B. The Design-Build Team may choose either lime or cement for all soils not meeting all criteria in either Column A or B.

DETERMINING THE APPLICATION RATES FOR SOIL-CEMENT AND SOIL-LIME MIXTURES

Soil-Cement Mixtures

For soil-cement mixtures, the Design-Build Team shall be required to do the following:

- Make specimens at optimum moisture content using a quantity of cement in the range of 5 to 12 percent by weight.
- Compact the specimens to a minimum density of 95% of maximum dry density obtained using AASHTO T-134.

- Make a minimum of 2 specimens for each selected cement rate.
- Cure the specimens for 7 days in a moist room maintained at a temperature of 73°F ±2.7° and a humidity of 100%. At the end of the curing period, immerse the specimens in water for 4 hours.
- After immersion, test the specimens in unconfined compression in accordance with ASTM D1633.
- Report the maximum strength obtained and the corresponding percent strain.
- Select the rate of cement that provides a minimum unconfined compressive strength of 200 psi and a maximum of 400 psi.

Soil-Lime Mixtures

For soil-lime mixtures, the Design-Build Team shall be required to do the following:

- Make specimens at optimum moisture content using a quantity of lime in the range of 3.5 to 6.5 percent by weight.
- Compact specimens to a minimum density of 95% of maximum dry density obtained by AASHTO T-99.
- Make a minimum of two specimens for each selected lime rate.
- Cure the specimens in sealed plastic bags for 48 hours in an oven at a temperature of 118°F. Do not immerse the specimens in water at the end of the curing period.
- Test the specimens in unconfined compression in accordance with AASHTO T-208. Report the maximum strength obtained and the corresponding percent strain.
- Select the rate of lime that provides a minimum unconfined compressive strength of 60 psi.

Submittals for Review and Approval Prior to Construction

The Design-Build Team shall adhere to the following submittal guidelines:

- Submit all laboratory test results for review.
- Submit a sketch in plan view showing areas of the project to be stabilized by either lime or cement and application rates for each stabilizer.
- Submit any other documentation that supports the Design-Build Team's recommendations.

Construction of Lime Treated Subgrade

The Design-Build Team shall construct the lime treated sub-grade as specified in Section 501 of the North Carolina Department of Transportation 2012 *Standard Specifications for Roads and Structures* with the following exceptions:

Subsection 501-4 Equipment: Contractor's equipment will not require engineer's approval.

Subsection 501-8 (A) General: Paragraph #1 is not applicable to this project.

Subsection 501-9 (B) Preliminary Curing: Amend as follows: Allow a minimum of 2 days and a maximum of 4 days for preliminary curing.

Subsection 501-10 Compacting, Shaping, and Finishing: Last paragraph is not applicable.

Subsection 501-11 Thickness: Last two paragraphs are not applicable.

Construction of Cement Treated Subgrade

The Design-Build Team shall construct the soil cement sub-grade as specified in Section 542 of the North Carolina Department of Transportation 2012 *Standard Specifications for Roads and Structures*, with the following exceptions:

Subsection 542-4 Equipment: Contractor's equipment will not require Engineer's approval.

Subsection 542-7 Application of Cement: First paragraph is not applicable.

Subsection 542-11 Thickness: Paragraphs 2 and 3 are not applicable.

Unconfined Compressive Strength

The Design-Build Team shall allow a minimum of seven days curing before testing for strength.

The lime-stabilized subgrades shall be tested using Dynamic Cone Penetrometer (DCP) in accordance with *Quality Assurance Testing of Lime-Treated Soils Utilizing the Dynamic Cone Penetrometer*, Test Method #1-2005. The Design-Build Team shall adhere to the testing equipment requirements and procedures as outlined in *Dynamic Cone Penetrometer Testing for Subgrade Stability* except that the minimum penetration depth shall be eight inches. Upon request, a copy of the aforementioned documents can be obtained from the NCDOT Geotechnical Engineering Unit. The required unconfined compressive strength for lime shall be 60 psi, which corresponds to a penetration per blow of approximately 0.5 inches of the Dynamic Cone Penetrometer.

For cement-stabilized subgrades, the Design-Build Team shall make field specimens, cure them for seven days and test them in the laboratory. The minimum and maximum required unconfined compressive strength for soil cement shall be 200 psi and 400 psi, respectively.

For both lime and cement stabilized subgrades, one test shall be required for every 400 feet per lane width at random locations selected using random number tables.

Submittals for Review During Construction

The Design-Build Team shall submit the unconfined compressive strength and dynamic cone penetrometer test results for review and acceptance.

PRICE ADJUSTMENTS FOR ASPHALT BINDER

(9-1-11) DB6 R25

Price adjustments for asphalt binder for plant mix will be made in accordance with Section 620 of the2012 *Standard Specifications for Roads and Structures*.

When it is determined that the monthly selling price of asphalt binder on the first business day of the calendar month during which the last day of the partial payment period occurs varies either upward or downward from the Base Price Index, the partial payment for that period will be adjusted. The partial payment will be adjusted by adding the difference (+ or -) of the base price index subtracted from the monthly selling price multiplied by the total theoretical quantity of asphalt binder authorized for use in the plant mix placed during the partial payment period involved.

The base price index for asphalt binder for plant mix is $XXX.XX per ton.

This base price index represents an average of F.O.B. selling prices of asphalt binder at supplier's terminals on **Insert Date**.

PRICE ADJUSTMENTS - ASPHALT CONCRETE PLANT MIX

(9-1-11) DB6 R26

Revise the 2012 *Standard Specifications for Roads and Structures* as follows:

Page 6-18, Article 609-11 and Page 6-35, Article 610-14

Add the following paragraph before the first paragraph:

The "Asphalt Price" used to calculate any price adjustments set forth in this section shall be $50 per theoretical ton. This price shall apply for all mix types.

ROCK BLASTING

(10-28-11) SP

Description

Blast rock to excavate, break up or remove rock and construct stable rock cuts using production, controlled and trench blasting. Use production blasting to fracture rock into manageable sizes for excavation. Use controlled blasting to form cut slopes in rock by limiting the effects of blasting with cushion or trim blasting. Use trench blasting to create trenches in rock for utilities and pipes and construct open ditches. Provide blasting submittals, use blasting consultants, conduct pre-blast surveys and test blasts, design and monitor blasts, blast rock and produce post-blast reports in accordance with the contract, accepted submittals and Section 220 of the *Standard Specifications for Roads and Structures*.

Utilizing the public information team, notify all occupants/owners of residences, businesses, structures and utilities in the surrounding area of the anticipated blast schedule at least 7 days prior to the initial blast. Subsequent scheduled blasts shall require a 24 hour notice. Such notifications can be accomplished through paper flyers, emails and direct communication. When the blasting operations are relocated within the project limits, notification as detailed above, shall occur and/or be expanded to encompass each region where blasting is required.

Use a Blasting Contractor prequalified by the NCDOT for rock blasting work (work code 070). Submit documentation that the Blasting Contractor has successfully completed at least 5 blasting projects within the last 3 years with subsurface conditions and blasting of a similar scope and

complexity. Documentation should include General Contractor, Owner's name and current contract information with descriptions of past project experience.

Project Requirements

At a minimum, conduct pre-blast surveys for any building, residence, structure or utility within 250 feet or less of the blast zone. In areas where no buildings, residences, structures or utilities are within 250 feet, conduct pre-blast surveys for buildings, residences, structures or utilities when the maximum charge per delay (Wmax) and the distance to the subject structure (D) may result in a peak particle velocity (PPV) equal to or greater than 0.4 inches/second. Determine PPV based on distance to structures and maximum charge per delay for blasts using the following:

$$PPV = K\left(D/\sqrt{W}\right)^m \quad \text{or} \quad PPV = K\,(D_S)^m$$

Where,

PPV	=	peak particle velocity ("/sec),
K	=	confinement factor (K factor),
D	=	distance to structure (ft),
W	=	maximum charge per delay (lb),
m	=	decay constant, and
D_S	=	scaled distance (ft/lb$^{0.5}$).

Typically, K is 240 and m is -1.6. However, K and m are site specific and may be determined from regression analysis of multiple PPV and D_S data pairs. Select K and m based on site conditions, rock type and structure, subsurface information and blast monitoring results.

Design blasts for the vibration and air overpressure (noise) detailed below:

Variable	Warning Level	Not-to-Exceed Limit
PPV (frequency < 40 Hz)	0.40"/sec	0.50"/sec
PPV (frequency > 40 Hz)	0.75"/sec	1.0"/sec
Air Overpressure	120 dB (linear)	133 dB (linear)

If warning levels are exceeded, the Engineer may require additional blast monitoring. If not-to-exceed limits are exceeded, the NCTA may temporarily suspend blasting operations.

Conduct test blasts before blasting within 250 feet or less of any building, residence, structure or utility.

Construction Methods

(A) Blasting Submittals

Submit 2 copies and a PDF copy of blasting plans and post-blast reports and if required, a personnel and experience submittal and pre-blast surveys to the NCTA.

(1) Personnel and Experience Submittal

Submit the proposed personnel and experience submittal for acceptance at least 30 days before submitting the general blasting plan. The Engineer may waive this submittal if blasting consultants are not required and the Blaster-in-Charge was previously accepted within the last year for another NCDOT project with blasting similar to that anticipated for this project. Do not submit the general blasting plan until the personnel and experience submittal is waived or a submittal is accepted.

Submit documentation that the proposed Blaster-in-Charge is approved as a Blaster-in-Charge (key person) for the Blasting Contractor and has at least 5 years of experience with subsurface conditions and blasting of a scope and complexity similar to that anticipated for this project. Documentation should include resumes, references, letters, certifications, project lists, experience descriptions and details, etc. If the Blaster-in-Charge changes, discontinue explosives use until a new Blaster-in-Charge is accepted.

(2) Blasting Plans

Submit the proposed general blasting plan for acceptance that meets Subarticle 220-3(B) of the *Standard Specifications for Roads and Structures* and includes the site specific blasting plan format and if required, test blast locations, pre-blast survey criteria and methods and which structures require pre-blast surveys.

After a general blasting plan is accepted, submit a site specific blasting plan for each blast at least 24 hours before beginning drilling. Site specific blasting plans may be waived for non-critical blasts as determined by the Engineer. Provide site specific blasting plans that meet Subarticle 220-3(B) of the *Standard Specifications for Roads and Structures* and include blast locations by station and offset, distance to nearest building, residence, structure or utility and blast monitoring locations. Do not exceed the maximum charge per delay accepted in the general blasting plan or submit a revised plan to increase the maximum charge per delay allowed.

(3) Pre-Blast Surveys

Provide pre-blast surveys signed by the Blaster-in-Charge.

After a general blasting plan is accepted and if pre-blast surveys are required, submit pre-blast surveys at least 24 hours before starting blasting. Provide pre-blast surveys that include at least the following:

(a) Summary with pre-blast survey date and time, comments about existing structure condition and name of individual conducting survey;

(b) Sketches of interior and exterior walls and foundations with existing cracks and written descriptions of cracks including length, width, type and angle; and

(c) 5-megapixel digital color pictures or video on CD or DVD documenting existing cracks and structure condition.

(4) Post-Blast Reports

Provide blast monitoring results signed by the Blaster-in-Charge. Provide post-blast reports that meet Subarticle 220-3(E) of the *Standard Specifications for Roads and Structures*.

(B) Blast Designs

Design blasts in accordance with the Project Requirements Section of this provision, if applicable, Subarticle 220-3(A) of the *Standard Specifications for Roads and Structures* and the following unless otherwise approved:

(1) Production Blasting

(a) Provide at least 6 ft clearance between production blast holes and slope faces.

(b) Drill production blast holes with a maximum diameter of 6".

(c) Do not drill production blast holes below bottom of adjacent controlled blast holes.

(d) Use delay blasting to detonate production blast holes towards a free face.

(2) Controlled Blasting

Use cushion or trim blasting for slopes steeper than 2:1 (H:V) with rock cuts taller than 15 ft.

(a) Drill cushion or trim blast holes with a maximum diameter of 6".

(b) Limit subdrilling to that necessary for excavation of slopes.

(c) Do not subdrill below finished grade.

(d) Provide benches or lifts with a maximum height of 25 ft.

(e) Do not use ANFO or other bulk loaded products.

(f) Design cushion or trim blasting with a maximum charge density and burden of one-half the charge density and burden for production blasting.

(g) If cushion, trim and production blast holes are fired in the same blast, fire cushion or trim holes at least 25 ms after production holes.

(3) Trench Blasting

(a) Drill trench blast holes with a maximum diameter of 3".

(b) Do not use ANFO or other bulk loaded products.

(c) Use cartridge explosives or other explosive types designed for trench blasting.

(d) Use charges with a diameter of 1/2" to 3/4" less than the trench hole diameter.

(C) Test Blasts

Define a "test blast" as drilling, blasting and excavating a test section before starting or resuming blasting. If test blasts are required, conduct at least one test blast for each blast type (production, controlled or trench blasting) and location requiring test blasts.

If blasting results in injuries or damages or PPV or air overpressure limits are exceeded at any utility or structure in any direction from blasts, the Engineer may suspend blasting and require test blasts before resuming blasting. When this occurs, inform the Engineer of test blast locations before submitting blasting plans.

Submit a site specific blasting plan for each test blast at least 72 hours before beginning drilling. Conduct test blasts in accordance with the accepted submittals and Article 220-3 of the *Standard Specifications for Roads and Structures*. Production, controlled or trench blasting may not begin or resume until the post-blast report for a test blast is reviewed, the rock cut from a test blast is fully exposed and the Engineer determines the exposed cut is acceptable. Examples of test blast results that may be unacceptable include excessive vibration, air overpressure or flyrock, overbreakage or overhangs and damaged rock cuts.

USE OF ELECTRONIC DESIGN FILES

(10-28-11) SP

The Design-Build Team shall develop coordinately correct MicroStation electronic design plans (three dimensional models optional) adhering to Roadway Design Guidelines for Design-Build Projects located at:

http://www.ncdot.org/doh/preconstruct/altern/design_build/RoadwayGuidelines080107.pdf

The Design-Build Team shall adhere to the surveying/ construction layout requirements detailed in Section 801 of the 2012 *Standard Specifications for Roads and Structures*. Should the Design-Build Team elect to design a three dimensional project model and integrate such model with GPS machine guidance during project construction, Section 801 may be modified provided the Design-Build Team can demonstrate an acceptable alternative approach. The Design-Build Team shall submit, for approval, a plan detailing procedures for surveying/construction layout that will ensure construction tolerances detailed within the Contract Documents are accomplished. Additionally, this plan shall detail the procedures that the Design-Build Team CEI firm will employ to verify such construction tolerances are met. The Design-Build Team shall also demonstrate that the model, in conjunction with the proposed GPS machine guidance procedures, is capable of achieving the construction tolerances detailed within the Contract Documents. If the surveying/construction layout/ oversight plan or machine accuracy control is deemed unacceptable by the Department, during any part of planning, design, or construction, the Design-Build Team may be required to revert back to requirements of Section 801 of the 2012 *Standard Specifications for Roads and Structures*.

Project Oversight

Once accepted by the Department, the Design-Build Team shall electronically provide the MicroStation Release For Construction (RFC) plans and associated three dimensional model, if

created, to the Design-Build CEI firm and NCTA prior to construction of that work element. Any revisions to such files shall also be provided by the Design-Build Team prior to construction of that work element.

All accepted MicroStation project design files and digital terrain models (existing or proposed) shall be made available electronically to the Design-Build CEI firm and the NCTA for use in the project oversight process. The Design-Build CEI Firm and the NCTA shall utilize such MicroStation electronic design files and any proposed three dimensional models in the project oversight process. The Design-Build Team CEI firm shall utilize a computer application which integrates coordinately correct electronic plans (three dimensional models optional) with physical GPS location, construction oversight processes, and asset inventory/quantity management. Such computer application shall be *Trimble SCS900, Bentley OnSite Electronic Field Book for Stakeout and Inspection,* or an approved equal. Such computer application can be used for the quantity management, project documentation, and as-built plan development contained in the CEI Scope of Work.

As-Built Plans

Regardless of the surveying/construction layout used, the Design-Build Team shall be responsible for providing coordinately correct as-built plans, which are calibrated to the state and project coordinate grid, detailing all assets, items and features included within the design. The final inspection shall be performed with the final as-built plans in hand.

DESIGN REFERENCES

(10-28-11) SP

Design references developed and published by NCDOT and / or other agencies and adopted for use by NCTA which are to be used in the design of this project may be obtained by contacting the Contracts and Standards Development Unit. Standard prices for materials, which the NCDOT normally sells for a fee, will be in effect. The Design-Build Team is responsible for designing in accordance with the applicable documents and current revisions and supplements thereto. Unique design guides created by the NCTA are available at no charge from the NCTA website.

REVIEW OF DESIGN SUBMITTALS

(10-28-11) SP

Major design milestones and required design submittals shall be identified as activities on the CPM. Unless otherwise noted in the RFP or the Design Build Submittal Guidelines, submittals will be reviewed within 10 working days (15 days for temporary structures, overhead sign assemblies, MSE walls, FEMA compliance documents and temporary shoring) from the date of receipt by NCDOT and NCTA unless otherwise stipulated in the scope of work. During the review process, the Department may require that a submittal be revised and re-submitted. However, if all issues are not resolved upon review of the second submittal of a particular plan submittal, the Design-Build Team may request a meeting with the NCTA Project Manager, or the NCTA will engage the Design-Build Team Project Manager to assist in the expeditious resolution of the remaining issues surrounding that submittal.

All submittals shall be prepared and submitted in accordance with the "*Design-Build Submittal Guidelines*", which by reference are incorporated and made a part of this contract. All submittals shall be made concurrently to the NCTA Project Manager, the NCTA Chief Engineer and the NCDOT Director of Transportation Program Management. The NCTA or NCDOT will not accept subsequent submittals until prior submittal reviews have been completed for that item. The Design-Build Team shall inform the NCTA Chief Engineer and the NCDOT Director of Transportation Program Management in writing of any proposed changes to the NCTA and/or NCDOT preliminary designs, Technical Proposal and / or previously reviewed submittals, and obtain approval prior to incorporation. The Design-Build Team shall prioritize submittals in the event that multiple submittals are made concurrently. All submittals shall include pertinent Special Provisions. No work shall be performed prior to North Carolina Turnpike Authority, FHWA and NCDOT review of the design submittals.

No review, approval, suggestion, or comment of NCDOT, FHWA or NCTA with respect to any design submittal shall diminish, reduce, mitigate, or waive the Design-Build Team's responsibility and liability for the design or design submittal.

All designs shall be in Microstation format using Geopak software (current version used by the NCDOT). Geopak drainage shall be required.

The Design-Build Team shall certify all plans, specifications, estimates and engineering data furnished by the Team.

The review of design plans by the Department is not intended to reflect a reviewer's personal preferences, but rather to ensure that all Contract requirements are met, sound engineering judgment is exercised by the Design-Build Team, and that the Design-Build Team adheres to all Referenced Documents, including but not limited to, design standards, codes, memos and manuals. As such, the award of the Design-Build contract does not in any way imply that the Department accepts the details of the Technical Proposal submitted by the Design-Build Team.

DESIGN QUALITY CONTROL PLAN

(10-28-11) SP

The Design-Build Team is fully responsible for the project design and quality thereof. The Design-Build Team shall submit for NCTA approval a quality control plan for design which is to ensure quality of all design elements.

The following shall be addressed in the quality control plan:

General

The Design-Build Team shall provide specific detail on the following:

- Design Quality Control process to include policy, procedures and specific roles
- How this quality control program promotes improved quality in the future design and submittals
- Qualifications for all key design personnel.
- Program administration; Level, frequency, and methods of review

- Methods by which all final design documents will be independently reviewed; verified for constructability, completeness, clarity, and accuracy; and back-checked
- Individual(s) accountable for each section of the program
- Responsibility for preparing and checking the plans, drawings, specifications, estimated, calculations, computer application input data, notes, and other submittal items.
- Review requirements, design standards, and design criteria
- How markups will be handled and resolved
- Internal design conflict resolution
- Who has authority to stop design work or elevate an issue
- Who will be certifying all plans, specifications, estimates, and engineering data that is furnished
- Quality Control process for specialty items
  - Reviewed in house and with what expertise
  - Responsible party for this review
  - Process for incorporation into other elements of the design
  - Documentation in the submittal process
- Handling of multiple reviewers / calculations for different aspects
- Third-party (sub-consultant, supplier, etc.) review requirements and prime consultant's role in the review of sub-consultant's work.
- Quality Control requirements of sub-consultant and/or prime prior to the prime certifying the deliverables to NCTA/NCDOT. Documentation and submission procedures to ensure that the established design Quality Assurance/Quality Control procedures have been followed.
- Quality Control of sub-consultant with no in house quality review (e.g. one noise analysis person in the firm)
- Internal process utilized for the certification of the deliverable prior to submittal
- Incorporation of Quality Control design process as a metric responsibility of all personnel involved and a measure of performance
- Environmental/ permit compliance review of each submittal to include sign off and handing of conflicts
- Railroad and utility permitting
- Distribution of plan revisions/RFIs, to include field personnel
- Tracking of plan revisions/RFIs to ensure resolution for all phases of the project
- Connection between design, construction and warranty

<u>Plans</u>

- Establishment and maintenance process for plans/ shop drawings/ submittals management and process for handling:
  - Issued drawings and design computations
  - Comments received by the NCTA/NCDOT
  - Disposition of comments
  - Revisions

  - Superseded drawings
  - RFC Plans
  - Sub-consultant documents
  - File structure and security
  - Drafting standards
  - Specific NCTA and discipline specific checklist that will be used
- Establishment and maintenance process for design calculation management and process for handling:
  - Calculation information linked to project: project title, calculation subject, consecutive page numbers, calculation date, check date
  - Calculations show full last name of originator and check
  - Summary of calculation and assumption(s) used
  - References
  - Backup materials appropriately labeled and referenced
  - Documentation of assumptions used for computer applications with hardcopies signed
  - Revisions
  - Superseded calculations
  - File structure and security

Audit

The Design-Build Team shall provide specific detail on the following:

- Who conducts the project audits, a team is preferred
- Audit team qualifications
- The scope of project audits, to include:
  - percentage of the design, calculations, computer input assumptions, and design details reviewed
  - Incorporation of past audit findings
- The level and frequency of the design audits
- Who will be invited to participate in the audits
- How findings will be disseminated
- Process utilized if corrective action is necessary,
- Time frames required for corrective action to occur,
- When follow-up audits should occur
- How audit information will be shared with team members and NCTA
- How the information discovered during audits will be incorporated into the design process for continuous quality improvement

The Design-Build Team shall certify each submittal stating that the processes and procedures identified in the Design Quality Control Plan have been performed.

PROJECT MANAGEMENT INTERNET COMMUNICATION REQUIREMENTS

(10-28-11) SP

The Internet/Web-based project collaboration software package Constructware®, provided by NCTA and developed by Autodesk, shall be used to manage and track this project. As a requirement of this project, the Design-Build Team shall use Constructware® on this project to facilitate design reviews, transmittals, and RFIs; to store and retain project files, design, plans, test results and all other plan documents; and to communicate collaboratively among project members. The Design-Build Team shall enter and maintain all project related documents in Constructware®. The Engineer, on a case-by-case basis, may approve distribution of document and files in the traditional manner, outside Constructware®.

The North Carolina Turnpike Authority will provide the Constructware® software and temporary licenses to use the project database for the duration of the project.

All other costs associated with using this system, including computer hardware, and Internet service, are the responsibility of Design-Build Team.

Use of Constructware® will not replace or alter any contractual responsibilities of the Design-Build Team set forth in the Contract Documents or within the 2012 *Standard Specifications for Roads and Structures*.

Design-Build Team members, including the CEI technicians, must have access during normal business operations to the Internet and an Internet e-mail address in order to utilize Constructware®.

The NCTA will provide key personnel training on the use of the Constructware® project collaboration system. The Design-Build Team will then disseminate this training information such that necessary personnel are proficient in the use of Constructware®.

The Design-Build Team shall provide an adequate number of users to manage the project utilizing the modules contained within Constructware®.

The Design-Build Team shall prepare minutes within seven calendar days for all project meetings that they attend utilizing the Constructware® Meeting Module. The uploading of minutes prepared outside of Constructware® is not acceptable.

More information on Constructware® is available via the World Wide Web, at www.autodesk.com/Constructware®.

DESIGN, CONSTRUCTION & CEI WORK PERFORMED BY DESIGN-BUILD TEAM

(10-28-11) SP

The Design-Build Team shall acknowledge that Provided Materials furnished by the NCTA and/or NCDOT are preliminary and provided solely to assist the Design-Build Team in the development of the project design. The Design-Build Team shall be fully and totally responsible for the accuracy and completeness of all work performed under this contract and shall save the NCTA and NCDOT harmless and shall be fully liable for any additional costs and all claims

against the NCTA and NCDOT which may arise due to errors, omissions and negligence of the Design-Build Team in performing the work required by this contract.

There shall be no assignment, subletting or transfer of the interest of the Design-Build Team in any of the work covered by the Contract without the written consent of the NCTA, except that the Design-Build Team may, with prior notification of such action to the NCTA, sublet property searches and related services without further approval of the NCTA.

All work by the Design-Build Team shall be performed in a manner satisfactory to the NCDOT and in accordance with the established customs, practices, and procedures of the NCDOT and NCTA, and in conformity with the standards adopted by the American Association of State Highway Transportation Officials, and approved by the U.S. Secretary of Transportation as provided in Title 23, U.S. Code, Section 109 (b). The decision of the North Carolina Turnpike Authority shall control in all questions regarding location, type of design, dimension of design, and similar questions.

Alternate designs, details, or construction practices (such as those employed by other states, but not standard practice in NC) are subject to the Department's review and will be evaluated on a case by case basis.

ETHICS POLICY
(10-28-11) SP

Employees employed by the Design-Build Team or employees employed by any subconsultant for the Design-Build Team to provide services for this project shall comply with the North Carolina Turnpike Authority's and NCDOT's ethics policies. Failure to comply with the ethics policy will result in the employee's removal from the project and may result in removal of the Company from consideration on future NCTA projects and/or in the recommendation to the NCDOT that the Company be removed from the NCDOT's appropriate prequalified list.

APPROVAL OF PERSONNEL
(10-28-11) SP

The Department will have the right to approve or reject for cause any personnel assigned to a project by the Design-Build Team.

In the event of engagement of a former Department employee, the Design-Build Team or their subcontractors shall restrict such person or persons from working on any of the Design-Build Team's contracted projects in which the person or persons were "formerly involved" while employed by the NCTA or NCDOT. The restriction period shall be for the duration of the contracted project with which the person was involved. *Former Involvement* shall be defined as active participation in any of the following activities:

Drafting the contract
Defining the scope of the contract
Selection of the Design-Build Team
Negotiation of the cost of the contract (including calculating manhours or fees); and
Administration of the contract

An exception to these terms may be granted when recommended by the NCTA Executive Director or Secretary of Transportation, as applicable, and approved by the NCTA Board of Directors or NCDOT Board of Transportation, as applicable.

Failure to comply with the terms stated above in this section shall be grounds for termination of this contract and/or not being considered for selection of work on future contracts for a period of one year.

The Design-Build Team shall not change team members, subconsultants or subcontractors identified in the Statement of Qualifications (SOQ) or Technical Proposal without written consent of the Engineer. In addition, subconsultants and subcontractors not identified in the SOQ or Technical Proposal shall not perform any work without written consent by the Engineer. Individual offices of the Design-Build Team not identified in the Statement of Qualifications or the Technical Proposal submitted shall not perform any work without written consent by the Engineer. Failure to comply with this requirement may be justification for removing the Team from further consideration for this project and disqualification from submitting on future NCTA Design-Build Projects.

PROJECT SAFETY PLAN

(10-28-11) SP

The Design-Build Team shall establish and submit to NCTA a project specific safety plan, which provides a safe and healthful environment for all construction personnel, proper maintenance of traffic and safety of the traveling public through the work zone. Additionally, identify, within the safety plan, the requirements for all subcontractors.

At minimum, the safety plan should detail the following:

- On-site Safety Officer with contact information
- Safety Equipment (personal protective equipment)
- List of employees with OSHA or safety related certifications
- Individual/s responsible for monitoring and enforcing safe conditions on daily basis
- Employee safety orientation program
- Annual, monthly, weekly or daily safety meetings
- Safety training initiatives
- Safety standards and measurements
- Safety procedures to address the NCTA's four emphasis areas: fall protection, crane safety, back-up alarms and trenching/shoring.
- Required personal protective gear
- Procedures in place for communication of unsafe acts and/or safety improvements
- Accountability process to include incident investigation procedures
- Safety assessment procedures for subcontractors performing work

In addition to the above company policies, provide safety procedures specific to the project work zone and daily project operations such as:

- Identification of ingress and egress from work areas
- Lane closure installation and maintenance
- Night time work plan to include lighting requirements

- Critical lift procedures
- Confined space entry

The Design-Build Team shall also include a plan, with established procedures, to react to potential security or emergency situations within the project limits.

OVERHEAD SIGN SUPPORTS

(9-1-11) DB11 R012

Description

Design, fabricate, furnish and erect various types of overhead sign assemblies. Fabricate supporting structures using tubular members of either aluminum or steel. The types of overhead sign assemblies included in this specification are span structures, cantilever structures and sign structures attached to bridges.

Materials

Structural Steel	Section 1072
Overhead Sign Structures	Section 1096
Signing Materials	Section 1092
Organic Zinc Repair Paint	Article 1080-9
Reinforcing Steel	Section 1070
Direct Tension Indicators	Sections 440 and 1072

Construction Methods

A. General

Fabricate overhead sign assemblies in accordance with the details shown in the approved working drawings and the requirements of these specifications.

No welding, cutting or drilling will be permitted in the field, unless approved by the Engineer.

Drill bolt holes and slots to finished size. Holes may also be punched to finished size, provided the diameter of the punched holes is at least twice the thickness of the metal being punched. Flame cutting of bolt holes and slots is not permitted.

Erect sign panels in accordance with the requirements for Type A or B signs as indicated in the plans or Roadway Standard Drawings. Field drill two holes per connection in the Z bars for attaching signs to overhead structures. Provide two U-bolts at each U-bolt connection such as each truss chord to sign hanger and each truss chord to walkway support or light support. Provide two U-bolts at each U-bolt connection where ends of truss chords are supported. The minimum diameter of all U-bolts is ½ inch.

Use two coats of a zinc-rich paint to touch up minor scars on all galvanized materials.

For high strength bolted connections, use direct tension indicators. Galvanize bolts, nuts and washers in accordance with the 2012 *Standard Specifications for Roads and Structures*.

B. Shop Drawings

Design the overhead sign supports, including foundations, prior to fabrication. Submit design calculations and working drawings of the designs to the Engineer for review and acceptance.

Have a professional engineer registered in the State of North Carolina perform the computations and render a set of sealed, signed and dated drawings detailing the construction of each structure.

Submit to the Engineer for review and acceptance complete design and fabrication details for each overhead sign assembly, including foundations and brackets for supporting the signs and maintenance walkways, if applicable, electrical control boxes, and lighting luminaires. Base design upon the revised structure line drawings, wind load area and the wind speed shown in the plans, and in accordance with the *Standard Specifications for Structural Structures for Highway Signs, Luminaires and Traffic Signals*.

Submit thirteen (13) copies of completely detailed working drawings and one copy of the design calculations including all design assumptions for each overhead sign assembly to the Engineer for approval prior to fabrication. Working drawings shall include complete design and fabrication details (including foundations); provisions for attaching signs, maintenance walkways (when applicable), lighting luminaires to supporting structures, applicable material specifications, and any other information necessary for procuring and replacing any part of the complete overhead sign assembly.

Allow 15 days for initial working drawing review after the Engineer receives them. If revisions to working drawings are required, an additional 15 days shall be required for review and approval of the final working drawings.

Approval of working drawings by the Engineer shall not relieve the Design-Build Team of responsibility for the correctness of the drawings, or for the fit of all shop and field connections and anchors.

C. Design and Fabrication

The following criteria govern the design of overhead sign assemblies:

Design shall be in accordance with the *Standard Specifications for Structural Supports for Highway Signs, Luminaires and Traffic Signals, 4th Edition, 2001,* and the latest Interim Specifications.

Within this Specification, there are several design criteria that are owner specified. They include:

- The wind pressure map that is developed from the 3-second gust speeds, as provided in Article 3.8, shall be used.
- Overhead cantilever sign structures shall include galloping loads (exclude four-chord horizontal trusses), truck-induced gust loading and natural wind gust loading in the fatigue design, as provided for in Article 11.7.1, 11.7.4 and 11.7.3 respectively.
- The natural wind gust speed in North Carolina shall be assumed to be 11.6 mph for inland areas.
- The fatigue importance category used in the design, for each type of structure, as provided for in Article 11.6, Fatigue Importance Factors, shall be Category II unless otherwise shown on the plans.

The following Specification interpretations or criteria shall be used in the design of overhead sign assemblies:

- For design of supporting upright posts or columns, the effective length factor for columns "K", as provided for in Appendix B, Section B.5, shall be taken as the following, unless otherwise approved by the Engineer:

  Case 1 For a single upright post of cantilever or span type overhead sign structure, the effective column length factor, "K", shall be taken as 2.0.

  Case 2 For twin post truss-type upright post with the post connected to one chord of a horizontal truss, the effective column length factor for that column shall be taken as 2.0.

  Case 3 For twin post truss-type upright post with the post connected to two truss chords of a horizontal tri-chord or box truss, the effective column length factor for that column shall be taken as 1.65

- For twin post truss-type upright post, the unbraced length shall be from the chord to post connection to the top of base plate.
- For twin post truss-type upright post, that is subject to axial compression, bending moment, shear, and torsion the post shall satisfy <u>*Standard Specifications for Structural Supports for Highway Signs, Luminaries and Traffic Signals*</u> Equations 5-17, 5-18 and 5-19. To reduce the effects of secondary bending, in lieu of Equation 5-18, the following equation may be used:

$$\frac{f_a}{F_a} + \frac{f_b}{\left(1 - \frac{0.6 f_a}{F_{\acute{e}}}\right) F_b} + \left(\frac{f_v}{F_v}\right)^2 \leq 1.0$$

  Where fa = Computed axial compression stress at base of post

- The base plate thickness for all uprights and poles shall be a minimum of 2" but not less than that determined by the following criteria and design.

  Case 1 Circular or rectangular solid base plates with the upright pole welded to the top surface of base plate with full penetration butt weld, and where no stiffeners are provided. A base plate with a small center hole, which is less

than 1/5 of the upright diameter, and located concentrically with the upright pole, may be considered as a solid base plate.

The magnitude of bending moment in the base plate, induced by the anchoring force of each anchor bolt shall be calculated as $M = (P \times D_1) / 2$.

Case 2 Circular or rectangular base plate with the upright pole socketed into and attached to the base plate with two lines of fillet weld, and where no stiffeners are provided, or any base plate with a center hole that is larger in diameter than 1/5 of the upright diameter.

The magnitude of bending moment induced by the anchoring force of each anchor bolt shall be calculated as $M = P \times D_2$.

- M - bending moment at the critical section of the base plate induced by one anchor bolt
- P - anchoring force of each anchor bolt
- D_1 - horizontal distance between the center of the anchor bolt and the outer face of the upright, or the difference between the radius of the bolt circle and the outside radius of the upright
- D_2 - horizontal distance between the face of the upright and the face of the anchor bolt nut

- The critical section shall be located at the face of the anchor bolt and perpendicular to the radius of the bolt circle. The overlapped part of two adjacent critical sections shall be considered ineffective.
- The thickness of Case 1 base plate shall not be less than that calculated based on formula for Case 2.
- Uprights, foundations, and trusses that support overhead signs shall be designed in accordance with the Overhead and Dynamic Message Sign Foundations Project Special Provision for the effects of torsion. Torsion shall be considered from dead load eccentricity of these attachments, as well as for attachments such as walkways, supporting brackets, lights, etc., that add to the torsion in the assembly. Truss vertical and horizontal truss diagonals in particular and any other assembly members shall be appropriately sized for these loads.
- Uprights, foundations, and trusses that support overhead mounted signs shall be designed for the proposed sign wind area and future wind areas. The design shall consider the effect of torsion induced by the eccentric force location of the center of wind force above (or below) the center of the supporting truss. Truss vertical and horizontal truss diagonals in particular and any other assembly members shall be appropriately sized for these loads.
- Span type overhead sign structures with monotube horizontal supports shall be designed to resist the following:
  - Galloping shall be checked by applying an equivalent static load of 21 psf shear pressure vertically to projected area of the signs that are mounted to horizontal monotube support structures as viewed in the normal elevation.

- Natural wind gust shall be checked by applying an equivalent static pressure of 5.2 psf multiplied by the drag coefficient, which is the same value as that used for cantilever structures. The natural wind gust pressure range shall be applied in the horizontal direction to the exposed area of all support members, signs and attachments.
- Truck-induced gust shall be checked by applying the following static pressure range:
  - $P_{TG} = 7.5\ C_d I_f$ (psf) Eq. 11-7
  - $P_{TG} = 10.2 C_d I_f$ (psf) Eq. 11-8
- The pressure range given by Eq. 11-7 shall be applied horizontally to the area of signs and horizontal members, while the values given by Eq. 11-8 shall be applied in the vertical direction to the area of the structure elements and projected area of the sign as viewed in the normal elevation. These pressures shall be applied along the entire span of the structure or along 24 feet of the span, whichever is smaller.
- Importance Factors for Vibration and Fatigue Design for Noncantilevered Monotube Sign Support Structures:
  - Galloping 0.72
  - Natural Wind Gust 0.85
  - Truck-Induced Gust 0.90

For non-cantilevered monotube sign support structures, the following table and figures are considered a required addition to the *Standard Specifications for Structural Support for Highway Signs, Luminaires and Traffic Signals, 4th Edition, 2001*:

Construction	Detail	Stress Category	Application	Example
Mechanically Fastened Connections	25. Bolts in Tension	D	Beam column connection for monotube structures	16
Fillet Weld Connections	26. Fillet welded with one side normal to applied stress	E'	Beam column connection for monotube structures	17
Mechanically Fastened Connections	27. High strength bolts in tension	D	Monotube or truss-chord splice	17
Fillet Weld Connections	28. Fillet welded with one side normal to applied stress	E'	Monotube or truss-chord splice	17
Mechanically Fastened Connections	29. U-bolts tied to transverse truss column to keep chords in place	D	Horizontal truss connection with vertical truss	18
Mechanically Fastened Connections	30. Net section of full-tightened, high tension bolts in shear	B	Truss bolted joint	18

Add to the Specifications, Figure 11-1:

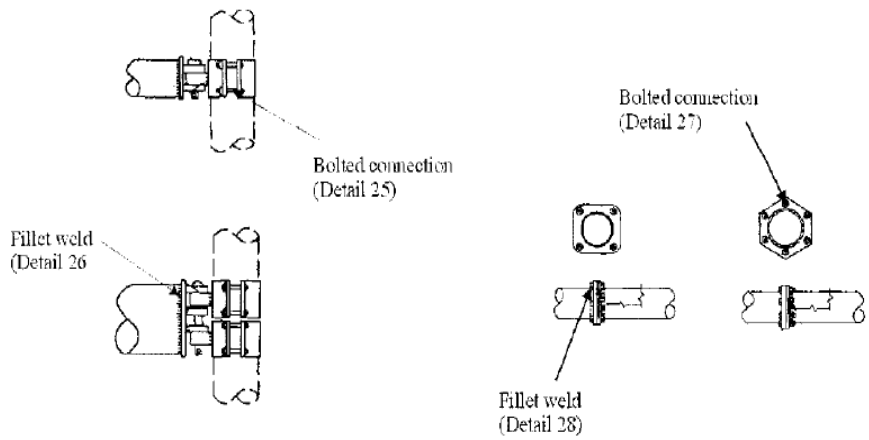

Beam-Column Connection for monotube structure
Example 16

Monotube beam splice
Example 17

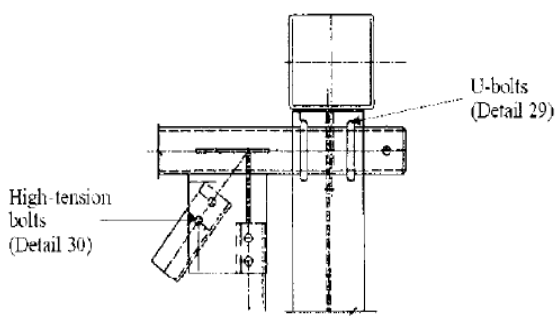

Beam-Column Connection for Truss Structure
Example 18

Fabricate all overhead sign assemblies, including but not limited to foundations, in accordance with the details shown on the approved shop drawings and with the requirements of these Specifications.

Fabricate the span and cantilever supporting structures using tubular members of either aluminum or steel, using only one type of material throughout the project. Sign support structures that are to be attached to bridges shall be fabricated using other structural shapes.

Horizontal components of the supporting structures for overhead signs may be of a truss design or a design using singular (monotube) horizontal members to support the sign panels.

Singular (monotube) horizontal members are not permitted for DMS. Truss or singular member centerline must coincide with the centerline of sign design area shown on the structure line drawing.

Provide permanent camber in addition to dead load camber in accordance with the *Standard Specifications for Structural Supports for Highway Signs, Luminaires, and Traffic Signals*. Indicate on the shop drawings the amount of camber provided and the method employed in the fabrication of the support to obtain the camber.

Use cantilever sign structures that meet the following design criteria:

a. Do not exceed an L / 150 vertical dead load deflection at the end of the arm due to distortions in the arm and vertical support, where L is the length of the arm from the center of the vertical support to the outer edge of the sign.

b. Do not exceed an L / 40 horizontal deflection at the end of the arm due to distortions in the arm and vertical support, as a result of design wind load.

Fabricate attachment assemblies for mounting signs in a manner that allows easy removal of sign panels for repair.

OVERHEAD AND DYNAMIC MESSAGE SIGN FOUNDATIONS

(9-1-11) DB11 R013

Description

Sign foundations include foundations for overhead and dynamic message signs (DMS) supported by metal poles or upright trusses. Sign foundations consist of footings with pedestals or drilled piers with or without grade beams or wings, conduit and anchor rod assemblies. Construct sign foundations in accordance with the contract and accepted submittals. Define "cantilever sign" as an overhead cantilever sign support in accordance with Figure 1-1 of the *AASHTO Standard Specifications for Structural Supports for Highway Signs, Luminaires and Traffic Signals*.

Materials

Use sign foundation materials that meet the *Foundations and Anchor Rod Assemblies for Metal Poles* provision.

Assumed Subsurface Conditions

Assume the following soil parameters and groundwater elevation for sign foundations unless these subsurface conditions are not applicable to sign locations:

(A) Unit weight = 120 lb/cf,

(B) Friction angle = 30 degrees,

(C) Cohesion = 0 lb/sf, and

(D) Groundwater 7 ft below finished grade.

A subsurface investigation is required if the Engineer determines these assumed subsurface conditions do not apply to a sign location and the sign cannot be moved. Subsurface conditions requiring a subsurface investigation include but are not limited to weathered or hard rock,

boulders, very soft or loose soil, muck or shallow groundwater. No extension of completion date or time will be allowed for subsurface investigations.

Subsurface Investigations

Use a prequalified geotechnical consultant to perform one standard penetration test (SPT) boring in accordance with ASTM D1586 at each sign location requiring a subsurface investigation. Rough grade sign locations to within 2 feet of finished grade before beginning drilling. Drill borings to 2 drilled pier diameters below anticipated pier tip elevations or refusal, whichever is higher.

Use the computer software gINT version 8.0 or later manufactured by Bentley Systems, Inc. with the current NCDOT gINT library and data template to produce SPT boring logs. Provide boring logs sealed by a geologist or engineer licensed in the state of North Carolina.

Sign Foundation Designs

Design sign foundations for the appropriate wind zone and the clearances shown in the plans developed by the Design-Build Team and the slope of finished grade at each sign location. Use the assumed soil parameters and groundwater elevation above for sign foundation designs unless a subsurface investigation is performed or required by the Engineer. For sign locations requiring a subsurface investigation, design sign foundations for the subsurface conditions at each sign location. Design footings, pedestals, drilled piers, grade beams and wings in accordance with the 4th Edition of the *AASHTO Standard Specifications for Structural Supports for Highway Signs, Luminaires and Traffic Signals*. In some instances, conflicts with drainage structures may dictate sign foundation types.

Design footings in accordance with Section 4.4 of the *AASHTO Standard Specifications for Highway Bridges*. Do not use an allowable bearing pressure of more than 3,000 lb/sf for footings.

Design drilled piers for side resistance only in accordance with Section 4.6 of the *AASHTO Standard Specifications for Highway Bridges* except reduce ultimate side resistance by 25% for uplift. Use the computer software LPILE version 5.0 or later manufactured by Ensoft, Inc. to analyze drilled piers. Provide drilled pier designs with a horizontal deflection of less than 1" at top of piers. For cantilever signs with single drilled pier foundations supporting metal poles, use wings to resist torsion forces. Provide drilled pier designs with a factor of safety of at least 2.0 for torsion.

For drilled pier sign foundations supporting upright trusses, use dual drilled piers connected with a grade beam having a moment of inertia approximately equal to that of either pier. The Broms' method is acceptable to analyze drilled piers with grade beams instead of LPILE. Use a safety factor of at least 3.5 for the Broms' design method in accordance with C13.6.1.1 of the *AASHTO Standard Specifications for Structural Supports for Highway Signs, Luminaires and Traffic Signals*.

Submit boring logs, if any, working drawings and design calculations for acceptance in accordance with Article 105-2 of the 2012 *Standard Specifications for Roads and Structures*.

Submit working drawings showing plan views, required foundation dimensions and elevations and typical sections with reinforcement, conduit and anchor rod assembly details. Include all boring logs, design calculations and LPILE output for sign foundation design submittals. Have sign foundations designed, detailed and sealed by an engineer licensed in the state of North Carolina.

Construction Methods

Construct footings, pedestals, drilled piers, grade beams and wings and install anchor rod assemblies for sign foundations in accordance with the *Foundations and Anchor Rod Assemblies for Metal Poles* provision.

HIGH MOUNT FOUNDATIONS

(9-1-11) DB11 R014

Description

High mount foundations for high mount standards consist of drilled piers or footings with pedestals, conduit and anchor rod assemblies. Construct high mount foundations in accordance with the contract and either *Roadway Standard Drawings* No. 1402.01 or the accepted submittals. Define "high mount standard foundation" as a drilled pier including the conduit and anchor rod assembly that meets Standard Drawing No. 1402.01.

Materials

Use high mount foundation materials that meet the *Foundations and Anchor Rod Assemblies for Metal Poles* provision.

High Mount Standard Foundations

Construct high mount standard foundations for the appropriate wind zone and high mount heights shown in the accepted plans developed by the Design-Build Team unless the following assumed site conditions are not applicable to high mount locations:

(A) Soil with unit weight (γ) $\geq$ 120 lb/cf and friction angle (ϕ) $\geq$ 30°,

(B) Groundwater at least 7 ft below finished grade, and

(C) Slope of finished grade 6:1 (H:V) or flatter.

A subsurface investigation and high mount foundation design are required if the Engineer determines these assumed site conditions do not apply to a high mount location and the high mount cannot be moved. Subsurface conditions requiring a high mount foundation design include but are not limited to weathered or hard rock, boulders, very soft or loose soil, muck or shallow groundwater. No extension of completion date or time will be allowed for subsurface investigations or high mount foundation designs.

Subsurface Investigations

Use a prequalified geotechnical consultant to perform one standard penetration test (SPT) boring in accordance with ASTM D1586 at each high mount location requiring a subsurface investigation. Rough grade high mount locations to within 2 feet of finished grade before beginning drilling. Drill borings to 2 drilled pier diameters below anticipated pier tip elevations or refusal, whichever is higher.

Use the computer software gINT version 8.0 or later manufactured by Bentley Systems, Inc. with the current NCDOT gINT library and data template to produce SPT boring logs. Provide boring logs sealed by a geologist or engineer licensed in the state of North Carolina.

High Mount Foundation Designs

Design high mount foundations for the wind zone and high mount heights shown in the accepted plans developed by the Design-Build Team and the slope of finished grade and subsurface conditions at each high mount location. Design drilled piers, footings and pedestals in accordance with the 4th Edition of the *AASHTO Standard Specifications for Structural Supports for Highway Signs, Luminaires and Traffic Signals*.

Design drilled piers for side resistance only in accordance with Section 4.6 of the *AASHTO Standard Specifications for Highway Bridges*. Use the computer software LPILE version 5.0 or later manufactured by Ensoft, Inc. to analyze drilled piers. Provide drilled pier designs with a horizontal deflection of less than 0.5" at top of piers.

Design footings in accordance with Section 4.4 of the *AASHTO Standard Specifications for Highway Bridges.* Do not use an allowable bearing pressure of more than 3,000 lb/sf for footings.

Submit boring logs, working drawings and design calculations for acceptance in accordance with Article 105-2 of the *Standard Specifications for Roads and Structures*. Submit working drawings showing plan views, required foundation dimensions and elevations and typical sections with reinforcement, conduit and anchor rod assembly details. Include all boring logs, design calculations and LPILE output for high mount foundation design submittals. Have high mount foundations designed, detailed and sealed by an engineer licensed in the state of North Carolina.

Construction Methods

Grade a 3 foot diameter level work area around high mount locations with cut and fill slopes as shown on Standard Drawing No. 1402.01. Construct drilled piers, footings and pedestals and install anchor rod assemblies for high mount foundations in accordance with the *Foundations and Anchor Rod Assemblies for Metal Poles* provision.

FOUNDATIONS AND ANCHOR ROD ASSEMBLIES FOR METAL POLES

(9-1-11) DB9 R05

Description

Foundations for metal poles include foundations for signals, cameras, overhead and dynamic message signs (DMS) and high mount and low level light standards supported by metal poles or upright trusses. Foundations consist of footings with pedestals and drilled piers with or without grade beams or wings. Anchor rod assemblies consist of anchor rods (also called anchor bolts) with nuts and washers on the exposed ends of rods and nuts and a plate or washers on the other ends of rods embedded in the foundation.

Construct concrete foundations with the required resistances and dimensions and install anchor rod assemblies in accordance with the contract and accepted submittals. Construct drilled piers consisting of cast-in-place reinforced concrete cylindrical sections in excavated holes. Provide temporary casings or polymer slurry as needed to stabilize drilled pier excavations. Use a prequalified Drilled Pier Contractor to construct drilled piers for metal poles. Define "excavation" and "hole" as a drilled pier excavation and "pier" as a drilled pier.

This provision does not apply to materials and anchor rod assemblies for standard foundations for low level light standards. See Section 1405 of the *Standard Specifications for Roads and Structures* and *Roadway Standard Drawings* No. 1405.01 for materials and anchor rod assemblies for standard foundations. For construction of standard foundations for low level light standards, standard foundations are considered footings in this provision.

This provision does not apply to foundations for signal pedestals; see Section 1743 of the *Standard Specifications for Roads and Structures* and *Roadway Standard Drawings* No. 1743.01.

Materials

Refer to the *Standard Specifications for Roads and Structures*.

Item	Section
Conduit	1091-3
Grout, Nonshrink	1003
Polymer Slurry	411-2(B)
Portland Cement Concrete	1000
Reinforcing Steel	1070
Rollers and Chairs	411-2(C)
Temporary Casings	411-2(A)

Provide Type 3 material certifications in accordance with Article 106-3 of the *Standard Specifications for Roads and Structures* for conduit, rollers, chairs and anchor rod assemblies. Store steel materials on blocking at least 12" above the ground and protect it at all times from damage; and when placing in the work make sure it is free from dirt, dust, loose mill scale, loose rust, paint, oil or other foreign materials. Load, transport, unload and store foundation and anchor rod assembly materials so materials are kept clean and free of damage. Damaged or deformed materials will be rejected.

Use conduit type in accordance with the contract. Use Class A concrete for footings and pedestals, Class Drilled Pier concrete for drilled piers and Class AA concrete for grade beams and wings including portions of drilled piers above bottom of wings elevations. Corrugated temporary casings may be accepted at the discretion of the Engineer. A list of approved polymer slurry products is available from:

www.ncdot.org/doh/preconstruct/highway/geotech/leftmenu/Polymer.html

Provide anchor rod assemblies in accordance with the contract consisting of the following:

(A) Straight anchor rods,

(B) Heavy hex top and leveling nuts and flat washers on exposed ends of rods, and

(C) Nuts and either flat plates or washers on the other ends of anchor rods embedded in foundations.

Do not use lock washers. Use steel anchor rods, nuts and washers that meet ASTM F1554 for Grade 55 rods and Grade A nuts. Use steel plates and washers embedded in concrete with a nominal thickness of at least 1/4". Galvanize anchor rods and exposed nuts and washers in accordance with Article 1076-4 of the *Standard Specifications for Roads and Structures*. It is not necessary to galvanize nuts, plates and washers embedded in concrete.

Construction Methods

Install the required size and number of conduits in foundations in accordance with the accepted plans developed by the Design-Build Team and accepted submittals. Construct top of piers, footings, pedestals, grade beams and wings flat, level and within 1" of elevations shown in the accepted plans or approved by the Engineer. Provide an Ordinary Surface finish in accordance with Subarticle 825-6(B) of the *Standard Specifications for Roads and Structures* for portions of foundations exposed above finished grade. Do not remove anchor bolt templates or pedestal or grade beam forms or erect metal poles or upright trusses onto foundations until concrete attains a compressive strength of at least 3,000 psi.

(A) Drilled Piers

Before starting drilled pier construction, hold a predrill meeting to discuss the installation, monitoring and inspection of the drilled piers. Schedule this meeting after the Drilled Pier Contractor has mobilized to the site. The Resident or Division Traffic Engineer, Contractor and Drilled Pier Contractor Superintendent will attend this predrill meeting.

Do not excavate holes, install piles or allow equipment wheel loads or vibrations within 20 feet of completed piers until 16 hours after Drilled Pier concrete reaches initial set.

Check for correct drilled pier alignment and location before beginning drilling. Check plumbness of holes frequently during drilling.

Construct drilled piers with the minimum required diameters shown in the accepted plans developed by the Design-Build Team. Install piers with tip elevations no higher than shown in the plans or approved by the Engineer.

Excavate holes with equipment of the sizes required to construct drilled piers. Depending on the subsurface conditions encountered, drilling through rock and boulders may be required. Do not use blasting for drilled pier excavations.

Contain and dispose of drilling spoils and waste concrete as directed and in accordance with Section 802 of the *Standard Specifications for Roads and Structures*. Drilling spoils consist of all materials and fluids removed from excavations.

If unstable, caving or sloughing materials are anticipated or encountered, stabilize holes with temporary casings and/or polymer slurry. Do not use telescoping temporary casings. If it becomes necessary to replace a temporary casing during drilling, backfill the excavation, insert a larger casing around the casing to be replaced or stabilize the excavation with polymer slurry before removing the temporary casing.

If temporary casings become stuck or the Design-Build Team proposes leaving casings in place, temporary casings should be installed against undisturbed material. Unless otherwise approved, do not leave temporary casings in place for mast arm poles and cantilever signs. The Engineer will determine if casings may remain in place. If the Contractor proposes leaving temporary casings in place, do not begin drilling until a casing installation method is approved.

Use polymer slurry and additives to stabilize holes in accordance with the slurry manufacturer's recommendations. Provide mixing water and equipment suitable for polymer slurry. Maintain polymer slurry at all times so slurry meets Table 411-3 of the *Standard Specifications for Roads and Structures* except for sand content.

Define a "sample set" as slurry samples collected from mid-height and within 2 feet of the bottom of holes. Take sample sets from excavations to test polymer slurry immediately after filling holes with slurry, at least every 4 hours thereafter and immediately before placing concrete. Do not place Drilled Pier concrete until both slurry samples from an excavation meet the required polymer slurry properties. If any slurry test results do not meet the requirements, the Engineer may suspend drilling until both samples from a sample set meet the required slurry properties.

Remove soft and loose material from bottom of holes using augers to the satisfaction of the Engineer. Assemble rebar cages and place cages and Drilled Pier concrete in accordance with Subarticle 411-4(E) except for the following:

(1) Inspections for tip resistance and bottom cleanliness are not required,

(2) Temporary casings may remain in place if approved, and

(3) Concrete placement may be paused near the top of pier elevations for anchor rod assembly installation and conduit placement or

(4) If applicable, concrete placement may be stopped at bottom of grade beam or wings elevations for grade beam or wing construction.

If wet placement of concrete is anticipated or encountered, do not place Drilled Pier concrete until a concrete placement procedure is approved. If applicable, temporary casings and fluids may be removed when concrete placement is paused or stopped in accordance with the exceptions above provided holes are stable. Remove contaminated concrete from exposed Drilled Pier concrete after removing casings and fluids. If holes are unstable, do not remove temporary casings until a procedure for placing anchor rod assemblies and conduit or constructing grade beams or wings is approved.

Use collars to extend drilled piers above finished grade. Remove collars after Drilled Pier concrete sets and round top edges of piers.

If drilled piers are questionable, pile integrity testing (PIT) and further investigation may be required in accordance with Article 411-5 of the *Standard Specifications for Roads and Structures*. A drilled pier will be considered defective in accordance with Subarticle 411-5(D) of the *Standard Specifications for Roads and Structures* and drilled pier acceptance is based in part on the criteria in Article 411-6 except for the top of pier tolerances in Subarticle 411-6(C).

If a drilled pier is under further investigation, do not grout core holes, backfill around the pier or perform any work on the drilled pier until the Engineer accepts the pier. If the drilled pier is accepted, dewater and grout core holes and backfill around the pier with approved material to finished grade. If the Engineer determines a pier is unacceptable, remediation is required in accordance with Article 411-6 of the *Standard Specifications for Roads and Structures*. No extension of completion date or time will be allowed for remediation of unacceptable drilled piers or post repair testing.

Permanently embed a plate in or mark top of piers with the pier diameter and depth, size and number of vertical reinforcing bars and the minimum compressive strength of the concrete mix at 28 days.

(B) Footings, Pedestals, Grade Beams and Wings

Excavate as necessary for footings, grade beams and wings in accordance with the plans, accepted submittals and Section 410 of the *Standard Specifications for Roads and Structures*. If unstable, caving or sloughing materials are anticipated or encountered, shore foundation excavations as needed with an approved method. Notify the Engineer when foundation excavation is complete. Do not place concrete or reinforcing steel until excavation dimensions and foundation material are approved.

Construct cast-in-place reinforced concrete footings, pedestals, grade beams and wings with the dimensions shown in the plans and in accordance with Section 825 of the *Standard Specifications for Roads and Structures*. Use forms to construct portions of pedestals and grade beams protruding above finished grade. Provide a chamfer with a 3/4" horizontal width for pedestal and grade beam edges exposed above finished grade. Backfill and fill in accordance with Article 410-8 of the *Standard Specifications for Roads and Structures*. Proper compaction around footings and wings is critical for foundations to resist uplift and

torsion forces. Place concrete against undisturbed soil and do not use forms for standard foundations for low level light standards.

(C) Anchor Rod Assemblies

Size anchor rods for design and the required projection above top of foundations. Determine required anchor rod projections from nut, washer and base plate thicknesses and the following:

(1) Protrusion of 3 to 5 anchor rod threads above top nuts after tightening and

(2) Distance of one nut thickness between top of foundations and bottom of leveling nuts.

Protect anchor rod threads from damage during storage and installation of anchor rod assemblies. Before placing anchor rods in foundations, turn nuts onto and off rods past leveling nut locations. Turn nuts with the effort of one workman using an ordinary wrench without a cheater bar. Report any thread damage to the Engineer that requires extra effort to turn nuts.

Arrange anchor rods symmetrically about center of base plate locations as shown in the plans. Set anchor rod elevations based on required projections above top of foundations. Securely brace and hold rods in the correct position, orientation and alignment with a steel template. Do not weld to reinforcing steel, temporary casings or anchor rods.

Install top and leveling (bottom) nuts, washers and the base plate for each anchor rod assembly in accordance with the following procedure:

(1) Turn leveling nuts onto anchor rods to a distance of one nut thickness between the top of foundation and bottom of leveling nuts. Place washers over anchor rods on top of leveling nuts.

(2) Determine if nuts are level using a flat rigid template on top of washers. If necessary, lower leveling nuts to level the template in all directions or if applicable, lower nuts to tilt the template so the metal pole or upright truss will lean as shown in the plans. If leveling nuts and washers are not in full contact with the template, replace washers with galvanized beveled washers.

(3) Verify the distance between the foundation and leveling nuts is no more than one nut thickness.

(4) Place base plate with metal pole or upright truss over anchor rods on top of washers. High mount luminaires may be attached before erecting metal poles but do not attach cables, mast arms or trusses to metal poles or upright trusses at this time.

(5) Place washers over anchor rods on top of base plate. Lubricate top nut bearing surfaces and exposed anchor rod threads above washers with beeswax, paraffin or other approved lubricants.

(6) Turn top nuts onto anchor rods. If nuts are not in full contact with washers or washers are not in full contact with the base plate, replace washers with galvanized beveled washers.

(7) Tighten top nuts to snug-tight with the full effort of one workman using a 12" wrench. Do not tighten any nut all at once. Turn top nuts in increments. Follow a star pattern cycling through each nut at least twice.

(8) Repeat (7) for leveling nuts.

(9) Replace washers above and below the base plate with galvanized beveled washers if the slope of any base plate face exceeds 1:20 (5%), any washer is not in firm contact with the base plate or any nut is not in firm contact with a washer. If any washers are replaced, repeat (7) and (8).

(10) With top and leveling nuts snug-tight, mark each top nut on a corner at the intersection of 2 flats and a corresponding reference mark on the base plate. Mark top nuts and base plate with ink or paint that is not water-soluble. Use the turn-of-nut method for pretensioning. Do not pretension any nut all at once. Turn top nuts in increments for a total of one flat (1/6 revolution). Follow a star pattern cycling through each nut at least twice.

(11) Ensure nuts, washers and base plate are in firm contact with each other for each anchor rod. Cables, mast arms and trusses may now be attached to metal poles and upright trusses.

(12) Between 4 and 14 days after pretensioning top nuts and in the presence of the Engineer, check nuts with a torque wrench. Use a torque wrench with a calibration certificate less than a year old and provide a copy of this certificate to the Engineer. Completely erect mast arm poles and cantilever signs and attach any hardware before checking top nuts for these structures with a torque wrench.

(13) If less than 600 ft-lb of torque is required to move any top nut, tighten nut to at least 600 ft-lb.

(14) Do not grout under base plate.

EPOXY PAVEMENT MARKING MATERIAL

(01-15-08) SP

Description

This work shall consist of applying black epoxy pavement marking material as black skips on concrete pavements.

Materials

Epoxy Pavement Marking Material shall conform to the requirements of Section 1087 of the 2012 *Standard Specifications for Roads and Structures* and the following:

Epoxy Composition

Epoxy pavement marking shall conform to the following materials:

Component	By Weight
Binder - Epoxy Resin	77% Max.
Titanium Dioxide (ASTM D-476-73 Type II & III)	18% Min.
Chrome Yellow (for yellow markings) (ASTM D-211 Type III)	23% Min.

The epoxy resin proportion of component A white, and component A yellow shall be identical, if the same component B is used for both white and yellow.

Combine the two components of the resin in the manner and proportions as recommended by the manufacturer based on tested pavement marking performance.

Epoxy Pavement Marking Material

(A) Formulation

Use epoxy pavement marking material consisting of 100% solid two-part system formulated and designed to provide a simple volumetric mixing ratio of the two components.

(B) Epoxide Value: ASTM D1652

WPE of the epoxy resin shall be 250 ± 50 for both white and yellow component A on a pigment free basis.

(C) Amine Value: ASTM D2074

The total amine value of the curing agent (component B) shall be 450 ± 50

(D) Requirements

(1) Color

Black: Must meet ASTM standard

(2) Hardness: ASTM D2240

Minimum Shore D hardness: 80

(3) Abrasion Resistance: ASTM C-501

Minimum wear index of catalyzed sample: 80

(4)	Adhesion to Concrete**:**	ASTM D4541
	At 100% concrete failure:	greater than 325 psi
(5)	Tensile Strength:	ASTM D638
	Minimum average tensile strength:	6000 psi
(6)	Compressive Strength:	ASTM D695
	Minimum compressive strength:	12000 psi
(7)	Drying Time:	ASTM D711
	Maximum drying time at 75±2°F:	10 minutes
(8)	Gel Time:	ASTM D2471
	Maximum gel time:	3 minutes

(E) Material Certification: Type 3 Material Certification and Type 4 Material Certification

Construction Methods

Epoxy Pavement Marking Material shall conform to the requirements of Section 1205 of the 2012 *Standard Specifications for Roads and Structures*.

(A) Application Equipment

Use epoxy application equipment, which is equipped with or capable of the following:

Precisely metering the two components in the ratio of proportion recommended by the manufacturer.

Producing the required amount of heat at the mixing head and gun tip.

Maintaining temperatures within the tolerances recommended.

Gauges for each proportioning pump so that any pressure difference can be easily monitored.

A minimum 24" long static mixer unit for proper mixing of the two components of the epoxy marking material.

Each component of the epoxy pavement marking shall be in a homogeneous state prior to mixing,

Have the capability to totally mix component A with component B immediately prior to the marking application.

Have the capability to spray both yellow and white pavement marking material and have the equipment mounted on a truck of sufficient size and stability with an adequate power source to produce uniform lines of the specified dimension.

A metering device to register the accumulated installed footage for each gun.

(B) Weather Limitations

Apply epoxy pavement marking only when the ambient air temperature and the pavement surface temperature is a minimum of 35°F and rising.

(C) Application

Produce epoxy pavement marking lines that have a minimum dry thickness of 15 mils.

Use **Type I** epoxy material (fast dry) for epoxy pavement markings except when otherwise specified in the contract documents.

Type II epoxy material may be used with lane closures as approved by the Engineer to allow for curing time.

Using the epoxy application equipment, apply the pavement marking materials simultaneously. Hot-spray the epoxy resin, mixed in accordance with the manufacturer's recommendations, onto the pavement surface within an application temperature range recommended by the manufacturer. Inject retroreflective glass beads into the molten (liquid) Epoxy Marking.

Individual Components: Before mixing, heat the individual components to within the temperature range of 100°F to 170°F. Do not exceed the upper limit of the manufacturer's recommended heating temperature at any time under any circumstances.

Mixed Material: After mixing, ensure that the application temperatures for the combined materials at the gun tip are within the temperature range recommended by the manufacturer for the particular product used.

Produce marking, which upon cooling, has the ability to resist deformation caused by traffic throughout its entire length.

(D) Observation Period

Epoxy pavement markings will be subject to a 12 month observation period.

Maintain responsibility for the pavement markings for a 12 month observation period beginning upon the satisfactory completion of all work required in the plans. Guarantee the markings under the payment and performance bond in accordance with Article 109-10.

Have traffic operating on the facility during the entire 12 month observation period unless otherwise directed.

Provide pavement marking material, which during the 12 month observation period, shows no signs of failure due to blistering, excessive cracking, chipping, bleeding, staining, discoloration, oil content of the pavement materials, smearing or spreading under heat, deterioration due to contact with grease deposits, oil, diesel fuel, or gasoline drippings, spilling, poor adhesion to the pavement materials, vehicular damage, debonding and normal wear.

Replace, at no additional expense to the Department, any pavement markings that do not perform satisfactorily under traffic during the 12 month observation period.

CONSTRUCTION NOISE ABATEMENT

(10-28-11) SP

The Design-Build Team shall take steps to minimize construction noise and its impact to the surrounding communities. If construction noise activities must occur at night in the vicinity of noise-sensitive areas, discrete construction noise abatement measures including, but not limited to portable noise barriers and other equipment-quieting devices shall be considered. Regardless of the measures implemented, the Design-Build Team shall conduct an aggressive outreach campaign prior to the noise generating operations to inform and educate the citizens within the noise sensitive areas about the upcoming operations, the duration of activities, the hour of operations and the noise abatement measures being implemented. Information regarding the noise sensitive operations and the associated work schedule shall be updated daily on the webpage until work within the noise sensitive areas is completed. The Twitter feed may be used for this purpose. In addition, the Design-Build Team shall develop a construction noise complaint mechanism along with protocol for addressing such complaints.

The Design-Build Team shall perform a construction noise and abatement study and shall include the following:

(a) Identification of land uses or activities that may be affected by noise from construction of the project.

(b) Determination of the measures that are needed to minimize or eliminate adverse construction noise impacts to the community. This determination shall consider the benefits achieved and the overall adverse social, economic, and environmental effects and costs of the abatement measures.

(c) Considerations of construction techniques and scheduling to reduce construction noise impacts to nearby receptors and incorporate the needed abatement measures in the project.

Common factors of project construction noise that shall be addressed as part of the construction noise and abatement study include, but are not limited to:

- Proximity of project construction activities to noise sensitive areas
- Schedule of project construction activities in the context of localized land use(s), both in terms of the hour(s) of the day (e.g. daytime, evening, and / or nighttime), and in terms of the number and type(s) of days, weeks, and / or months specific activities might occur (e.g. weekday, weekend, holiday, season, etc.).

- Likelihood of any severe construction noise emissions, particularly from impact-type equipment, that might occur in the vicinity of noise sensitive areas.

Potential localized measures that can be evaluated for inclusion in the construction noise and abatement study include, but are not limited to, schedule restrictions, equipment exhaust muffler requirements, haul-road locations, elimination of "tail gate banging", ambient-sensitive backup alarms and temporary noise barriers or buffers.

The construction noise and abatement study shall be submitted to the NCTA for review and approval and all approved elements shall be implemented into the construction activities prior to construction noise emission. The study results shall be described in the Design Noise Report.

FEDERAL ENERGY REGULATORY COMMISSION (FERC) APPROVAL

(10-28-11) SP

A Duke Energy Conveyance Permit and easement is required for work, construction and maintenance, within the Catawba-Wateree Hydroelectric project boundaries for Lake Wylie. Lake Wylie includes portions of Catawba Creek, South Fork Catawba River, and Catawba River. No construction activity shall begin within the hydroelectric project boundary until a formal written conveyance is obtained from Duke Energy Corporation and an order approving the conveyance is received from the FERC.

The NCTA has initiated coordination with Duke Energy Corporation regarding the license revision to allow an easement within the Catawba-Wateree Hydroelectric project boundary for the Garden Parkway, and will seek approval from Duke Energy and FERC. NCTA will obtain an easement based on design plans documented in the Conveyance Permit application.

If the Design-Build Team proposes changes to the plans submitted in the accepted Duke Energy Conveyance Permit Application, a Conveyance Permit Modification may be required. Revisions or modifications to the NCTA's plans that reduce impacts within the hydroelectric project boundary will likely be seen as favorable to Duke Energy and FERC. NCTA will coordinate with Duke Energy to determine if a modification is necessary. If a modification is required, the Design-Build Team shall be required to prepare all documentation and submit the package to the NCTA. Upon receipt of the package NCTA will provide the information to Duke Energy for submittal to the FERC.

Revisions or modifications to the NCTA's plans that increase impacts within the hydroelectric project boundary may invalidate NCTA's approved Conveyance Permit and require the Conveyance Permit Application process to be reinitiated. In this case, it would be the full responsibility of the Design-Build Team to obtain the required Duke Energy Conveyance Permit from Duke Energy and FERC. The NCTA shall not honor any requests for additional contract time or compensation, including idle equipment or mobilization or demobilization costs, for the Design-Build Team mobilizing men, materials (or ordering materials), or equipment.

EMPLOYMENT
(9-1-11) DB1 G184

Revise the 2012 *Standard Specifications for Roads and Structures* as follows:

Page 1-20, Subarticle 102-15(O), delete and replace with the following:

(O) Failure to restrict a former Department employee as prohibited by Article 108-5.

Page 1-65, Article 108-5 CHARACTER OF WORKMEN, METHODS, AND EQUIPMENT, delete the first sentence of the second paragraph and delete the first word of the second sentence of the second paragraph.

MATERIAL TRANSFER VEHICLE
(10-28-11) SP

Revise the 2012 *Standard Specifications for Roads and Structures* as follows:

Page 6-26, Article 610-8, delete the fourth paragraph and replace with the following:

Use a material transfer vehicle (MTV) when placing all asphalt concrete plant mix pavements which require the use of asphalt binder PG 76-22 and for all types of OGAFC, unless otherwise approved. Use a MTV for all surface mix, regardless of binder grade, for all full width travel lanes, shoulders, collector lanes, ramps, and loops, auxiliary lanes, Y-Lines, and turn lanes unless otherwise approved. Use a MTV meeting Section 9.5(E) of the most current version of the *HMA/QMS Manual*.

INTELLIGENT COMPACTION
(12-23-11) SP

Description

Intelligent compaction (IC) shall be used for proof rolling and embankment compaction acceptance and shall consist of using IC rollers to construct test sections, proof roll embankments and to determine embankment stiffness.

Develop correlations between IC measurements and soil modulus from test sections. Determine soil modulus from plate load tests for a vertical stress of 70 psi in accordance with AASHTO T 222 as modified by the Department. Copies of these modified procedures are available upon request from the Department's Geotechnical Engineering Unit (GEU). Use QC personnel trained by the GEU to perform plate load tests.

(A) Construct embankments in accordance with the Contract. Compact and test embankment fill layers with equipment and methods chosen by the Contractor. After completing the first test section and developing initial correlations, fill layer compaction will be accepted based on proof rolling with IC rollers in lieu of AASHTO T-99 density testing specified in Article 235-3(C) of the *Standard Specifications for Roads and Structures*.

Preconstruction Requirements

Use an IC Vendor approved by the Department that has successfully completed at least 3 IC projects within the last 5 years. Use self-propelled vibratory IC rollers. Use a Real Time Kinematic Global Positioning System (RTK-GPS) that records northing, easting and elevation of IC rollers. Provide RTK-GPS and IC rollers that operate with the following tolerances:

INTELLIGENT COMPACTION TOLERANCE REQUIREMENTS	
Parameter	**Tolerance (+/-)**
Roller Position (northing, easting and elevation)	1.6"
Roller Speed (forward)	0.5 mph
Frequency	2 Hz
Amplitude	0.0008"

Provide IC rollers with integrated on-board documentation systems that record date, time, roller position, speed, pass count and travel direction, drum frequency and amplitude and IC measurement values (IC-MV). Use documentation systems that display color coded maps of results in the operator's cab and can transfer electronic files of the IC data and results.

(A) IC Plan

Develop and submit an IC plan at least 30 days before starting test sections. The IC plan shall be approved prior to construction of any test section. Provide detailed project specific information in the IC plan that includes the following:

(1) IC Vendor with representative contact information and experience details;

(2) List and description of IC rollers and documentation systems;

(3) Format for IC data and results including how the following information will be provided to the Engineer;

(a) File name,

(b) Date and time stamps,

(c) Machine manufacture, model, type and identification number,

(d) Drum width and diameter,

(e) Roller and drum weights,

(f) Roller RTK-GPS positions with northing, easting and elevation,

(g) Roller speed, pass count and travel direction (e.g., forward or backward),

(h) Drum frequency and amplitude and

(i) IC-MV,

(4) Any historical correlation data between IC-MV and plate load tests from previous projects;

(5) Test section plan and details including test section locations and material sources and testing and

(6) IC training details and location.

(B) IC Training

Provide 2 consecutive days of IC training, one day of classroom training and another day of field training, for up to 40 personnel (Department and QC) prior to implementing IC operations. On the first day, hold the "Essential IC Workshop" (see ***http://www.intelligentcompaction.com***) at a location local to the project. The second day shall consist of the IC Vendor representative conducting field training on the project.

(C) Test Sections

Construct the first test section within 14 days of beginning earthwork operations. Perform the following test procedures for each of the test sections:

Property	**Test Method**
Soil Classification	AASHTO M-145
Moisture-Density Curve	AASHTO T-99, as modified by the Department

Preform, at minimum, one test section for granular materials and one test section for silt -clay materials as defined by AASHTO M-145 for materials consistent with that anticipated for embankment construction. Additional test sections may be necessary when adequate stiffness is not achieved, earth materials varies, IC equipment changes and/or whenever directed. Additional test sections may be beneficial when earth materials vary in order to develop better correlations.

Locate test sections at least 4 feet above existing ground unless the Department waives this requirement based on subsurface conditions underlying test section locations. Test sections may remain in place for embankments provided the test section will be at least 6 feet below subgrade. Notify the Department at least 5 days before establishing the initial test sections in order for the Department to prepare associated field QA testing. Construct test sections using the proposed construction / compaction techniques, a minimum 30 feet wide and 500 feet long, and no more than 24 inches thick.

Proof roll test sections with IC rollers moving forward at a speed of 3 mph in the presence of both QC CEI personnel and the Department and in accordance with the accepted IC plan. Perform plate load tests within 24 hours of proof rolling with IC rollers. Use the IC and plate load test data and results from the test sections to develop correlations between IC-MV and soil modulus in accordance with Section 7.8.1 of the *NCHRP Report No. 676 Intelligent Soil Compaction Systems*. For each test section, the Department will select 5

locations per compaction state for field moisture content and plate load tests based on IC results.

Submit IC and plate load test data and results, IC-MV and soil modulus correlations for acceptance. Do not disturb or allow any equipment on or near the initial test sections until the Department completes QA field testing, which shall occur within 5 working days.

Construction Methods

After completing the initial test sections and developing initial correlations, place and compact embankments in accordance with Section 235 of the *Standard Specifications for Roads and Structures* except for the following:

(A) Place each fill layer with a thickness of no more than 24 inches

Maintain moisture content of embankment fill materials within 3% of optimum moisture content as defined by AASHTO T-99 as modified by the Department. Visually monitor moisture content daily using the judgment procedures described in the latest edition of the Conventional Density Manual provided by the Materials and Tests Unit. If the judgment factors indicate the soil may exceed 3% of optimum moisture as defined by AASHTO T-99 as modified by the Department, obtain a sample to determine the in-place moisture content. In-place moisture content can be determined either by following procedures provided in the Conventional Density Manual or by using the Speedy Moisture apparatus as defined in AASHTO T-217. As a minimum, determine in-place moisture content at a frequency of every three days of earthwork operations.

(B) Compact each fill layer to a soil modulus of at least 2,000 psi instead of a density of 95% of that obtained by compacting a sample of material in accordance with AASHTO T-99 as modified by the Department.

(C) Proof roll each fill layer with IC rollers moving forward at a speed of 3 mph in the presence of the QC Personnel to determine soil modulus in accordance with the appropriate accepted test section correlation. Use accepted correlations from test sections constructed with embankment fill materials representative of fill layers. An embankment section shall be defined as a fill layer of 2,500 cubic yards or portion thereof. Compaction shall be accepted when a minimum of 70% of the embankment section meets or exceeds the soil modulus requirements defined above. If the next embankment lift is not placed soon after proof rolling with IC rollers, the Engineer may require proof rolling again for acceptance of fill layer compaction before placing the next layer. If a section repeatedly fails compaction, the soil modulus may be determined from plate load tests for a vertical stress of 70 psi in accordance with AASHTO T-222 as modified by the Department. Perform 4 plate load tests per section at random locations. For each section of a fill layer tested with plate load tests, compaction is acceptable if the average soil modulus is at least 2,000 psi and each of the 4 soil modulus values has a minimum result of 1,500 psi. Submit 4 hard and electronic copies of the IC data, per the IC Plan, and plate load test data/results for each section within 48 hours of proof rolling with IC rollers and/or performing plate load tests.

RISK MANAGEMENT WORKSHOP
(1-2-12) SP

The Design-Build Team shall conduct, at minimum, two formal Risk Management workshops with the major Design-Build Team participants, the NCTA, NCDOT and FHWA. Due to the pervasive nature of risks and the impact that risk allocation/mitigation may have on other project plans and actions, the Risk Management Process must be a total team function/ responsibility. Risk Management must be forward looking and identify potential problems in advance of the uncertain events occur to provide the maximum allowable time for the development of strategies to mitigate the risk or to increase the probability/likelihood of a favorable outcome. Therefore, the Risk Management workshops shall occur at 1) design notice to proceed and 2) RFC Plan approval and prior to construction.

The formal Risk Management Process shall include risk identification, assessment, analysis, mitigation, allocation and tracking/updating consistent with *Guide to Risk Assessment and Allocation for Highway Construction Management, FHWA-PL-06-032, October, 2006*. One objective of the Risk Management Process or risk-based decision making process is to organize information about the possibility of uncertain events occurring (both positive and negative) into an orderly structure which promotes prompt, rational, repeatable and defendable decisions.

In August, 2011, the NCTA performed a Risk Assessment for the Garden Parkway Projects in conjunction with the Value Engineering Workshop. The risk assessment focused on the preliminary design and project procurement. During this assessment, seven main areas of risk were identified: potential litigation, utility relocation, funding, access (including interchanges), right-of-way, railroad coordination, and permitting. The Risk Assessment findings are located within the U-3321 Value Engineering Report, dated September 2, 2011. The NCTA recognizes that the risks identified in August are agency specific and have been addressed/mitigated/allocated in various ways. Therefore, another objective of the Design-Build Team's formal Risk Management workshop is to identify risks specific to but not limited to current design, construction, contracting and to communicate these risks to all Design-Build Team members, including NCTA/NCDOT. With the assembly and conveyance of this information, the Design-Build Team, including NCTA/NCDOT, can collectively track and/or mitigate risks to produce favorable outcomes.

ROADWAY SCOPE OF WORK (2-17-12)

The Design-Build Team shall design and construct the project such that the functionality shown on the Functional Design Map dated June 9, 2010 provided by the NCTA, is maintained or exceeded, except as otherwise noted herein. The design of the project shall also accommodate the traffic projections and proposed laneage as provided by NCTA in Appendix A of the *Final Traffic Capacity Analysis Technical Memorandum* dated September 2011 for the design years as prescribed herein.

As noted below, from the beginning of the project to the Ramp -25ARC- western terminus, the project design and construction shall accommodate one additional future median lane and median shoulder, in each direction along the mainline. This accommodation shall include, but not be limited to, the placement of gantries and bridges and, to the greatest extent practicable, conduit and lighting, such that they will not require relocation or replacement during construction of the aforementioned future widening. In addition, to the greatest extent practicable, median drainage structures shall be located to minimize their required adjustments during construction of the future widening. The Design-Build Team shall discuss all conduit, lighting and drainage features that will require adjustments during construction of the future median lanes and shoulders in the Technical Proposal. The Design-Build Team shall not waste any unsuitable material beneath, or in proximity to, this future widening.

Project Details

- The Design-Build Team shall design and construct the Garden Parkway with the mainline laneage shown in Appendix A, Figure 18 of the *Final Traffic Capacity Analysis Technical Memorandum* dated September 2011. Excluding the West Boulevard intersection, the mainline shall be designed and constructed as a divided facility with a minimum 46-foot median. The mainline shall be designed and constructed in accordance with requirements for a rolling urban freeway from the eastern terminus located east of Patrick Road (SR 2425) to the western terminus at West Boulevard. The median centerline coordinates at the beginning of the project shall be Northing 1360187.3231 and Easting 526292.2783 and extend on a horizontal alignment of S 42°17’58.0” E. The proposed vertical alignment at the aforementioned coordinates shall be at an elevation of 765.73 and extend at a -1.0561% grade. From the beginning of the project to the Ramp -25ARC- western terminus, the mainline shall be designed and constructed to meet a 70 mph design speed. From the Ramp -25ARC- western terminus to the end of the project, the mainline design speed may be reduced to 50 mph. The Design-Build Team shall provide all design criteria in the Technical Proposal.

- Unless noted otherwise elsewhere in this RFP, the Design-Build Team shall design and construct the -L- Line, -Y- Lines, ramps, loops, auxiliary lanes, service roads and cul-de-sacs providing the same or better access, widening and improvements shown on the June 9, 2010 Functional Design Map provided by the NCTA. The limits of the -L- Line, -Y- Line, and service road construction shall be of sufficient length to tie to existing facilities based upon the current NCDOT guidelines and standards.

- All facilities that have more than one functional classification shall be designed and constructed to the functional classification with a higher movement hierarchy.

- The preliminary design shown on the June 9, 2010 Functional Design Map provided by NCTA accommodates the 2035 non-toll traffic forecasts. However, the Design-Build Team's design and construction shall accommodate the 2025 intermediate year traffic volumes and lane configurations shown in the *Final Traffic Capacity Analysis Technical Memorandum* dated September 2011 provided by NCTA. At a minimum, the Design-Build Team's design and construction shall be in accordance with the requirements noted below:

  - Unless noted otherwise elsewhere in this RFP, the Design-Build Team shall design and construct all at-grade intersections with the lane configurations noted in Appendix A, Figures 6 through 9 of the *Final Traffic Capacity Analysis Technical Memorandum* dated September 2011, provided by NCTA. All intersection turn lane lengths shall meet the current NCDOT standards where vehicle storage does not govern or the lengths required by the storage lengths shown in the aforementioned Figures, whichever is greater. This determination shall be made by calculating the recommended treatment for turn lanes, incorporating the minimum deceleration lengths, as defined in the NCDOT *Roadway Design Manual* (Reference Section 9-1, Figure F-4A) and comparing the calculated values with the minimum turn lane lengths. The Design-Build Team shall accommodate the right turn maneuver at all intersections in accordance with the NCDOT *Roadway Design Manual* (Reference Section 9-1, Figure F-4C).

  - The Design-Build Team shall provide horizontal and vertical functional designs that verify the 2025 intermediate year design will accommodate the 2035 design year traffic volumes and laneage shown in the *Final Traffic Capacity Analysis Technical Memorandum* dated September 2011, with minimal rework. This verification shall include, but not be limited to, the following:

    - All -Y- Line structures over the mainline shall be designed and constructed such that only one side is required to be widened to accommodate the aforementioned 2035 design year traffic volumes and laneage, as well as the future sidewalk accommodations noted below.

    - All mainline structures over -Y- Lines shall be designed and constructed to a length long enough to accommodate the aforementioned 2035 design year traffic volumes and laneage, as well as the future sidewalk accommodations noted below.

    - All structures shall be designed and constructed to accommodate the horizontal and vertical clearances required when the crossing facility is widened to accommodate the aforementioned 2035 design year traffic volumes and laneage, as well as the future sidewalk accommodations noted below.

    - At a minimum, future five-foot wide sidewalks shall be accommodated on either side of Union Road (NC 274) and South Point Road (NC 273), including but not limited to the structure requirements noted above, berm width requirements and right of way width requirements.

- To the greatest extent practical, the design and construction shall accommodate future installation of aesthetic features on facilities widened to accommodate the aforementioned 2035 design year traffic volumes and laneage.

- The Design-Build Team shall determine the additional right of way required for the aforementioned 2035 design year functional horizontal and vertical designs for the NCTA review and approval. For the NCTA acquisition, the Design-Build Team shall delineate only these extended limits on the Right of Way Plans.

- At critical locations, the Design-Build Team shall provide details on how the constructed project will accommodate the future widening in the Technical Proposal.

- Unless right of way impacts are substantial, the Design-Build Team shall avoid locating -Y-Lines and / or service roads opposite ramp terminals.

- The NCTA will provide an approved Interstate Access Report (IAR), with supporting analyses and models, for the Garden Parkway / I-485 interchange. If the Design-Build Team revises the roadway design such that this approved IAR is nullified, the Design-Build Team shall re-analyze the interchange and complete a revised IAR, if necessary, for NCTA and FHWA review and approval. Prior to developing a revised IAR, the Design-Build Team shall schedule a joint meeting with the NCTA and FHWA after acceptance of the Preliminary Roadway Plans. Prior to submitting a revised IAR to the FHWA, the Design-Build Team shall submit the revised IAR, with supporting analyses and models, to the NCTA for review and approval. The NCTA will not honor any requests for additional contract time or compensation for any efforts required in order to obtain a revised IAR, including but not limited to additional design effort, additional construction effort, and / or additional coordination and approvals.

- Without prior written approval, operation of the Charlotte-Douglas International Airport shall not be impacted by design and / or construction. The Design-Build Team shall be responsible for all required coordination with, and approval from, the FAA and the Charlotte-Douglas International Airport. (Reference the FAA Notification of Construction Project Special Provision found elsewhere in this RFP) The Design-Build Team shall also coordinate the design and construction with the NCDOT Rail Division and Norfolk Southern Railway to avoid negative impacts to the operation of existing and future roadway and rail facilities that serve the Charlotte-Douglas International Airport's Intermodal Facility.

- As currently designed, the Garden Parkway Project incorporates the R-2248H and U-3411 designs, both currently under construction. The Design-Build Team shall indicate their efforts / plans to minimize reconstruction of the infrastructure completed as part of these projects in the Technical Proposal.

- All roundabouts shall adhere to the design and operation parameters as detailed in *Roundabouts: An Informational Guide, Second Edition (NCHRP Report 672).* Prior to incorporation, the Design-Build Team shall provide a traffic analysis of the proposed

roundabout(s), utilizing SIDRA Intersection 5.1 analysis software, for NCTA review and approval. From an operational perspective, one lane roundabouts are preferred.

- Unless noted otherwise elsewhere in this RFP, the Design-Build Team shall design and construct 12-foot outside shoulders, four-foot of which shall be full depth paved shoulder and six-foot of which shall be partial depth paved shoulder along the -L- Line. The Design-Build Team shall design and construct six-foot median shoulders, four-foot of which shall be full depth paved shoulder along the -L- Line. (Reference the Pavement Management Scope of Work found elsewhere in this RFP)

- The Design-Build Team shall provide milled rumble strips along the -L- Line inside and outside paved shoulders, including ramp and loop terminals, and acceleration, deceleration and auxiliary lanes, in accordance with the July 2012 NCDOT *Roadway Standard Drawings*.

- The Design-Build Team shall design and construct one-lane ramps that provide a minimum 16-foot lane width. The Design-Build Team shall design and construct two lane ramps that provide minimum 12-foot lanes. Unless noted otherwise elsewhere in this RFP, all ramps shall have 14-foot outside shoulders, four-foot of which shall be full depth paved shoulders and 12-foot inside shoulders, four-foot of which shall be full depth paved shoulders.

- The Design-Build Team shall design and construct one-lane loops that adhere to Exhibit 3-51, *Design Widths of Pavements for Turning Roadways,* shown in AASHTO's *A Policy on Geometric Design of Highways and Streets* (2004) - Case II / Condition C. Unless noted otherwise elsewhere in this RFP, all loops shall have 12-foot outside shoulders, four-foot of which shall be full depth paved shoulders. All loops shall have 2'-6" curb and gutter along the inside edge of pavement with a minimum 12-foot berm. The minimum loop design shall be 30 mph with a minimum 230-foot radius.

- At each All-Electronic Tolling (AET) Site (with and without buildings), the Design-Build Team shall provide 14-foot shoulders, 12 feet of which shall be full-depth paved shoulders for the minimum lengths noted below:
  - Upstream of all AET Sites, the Design-Build Team shall provide the aforementioned shoulder widths a length equal to the distance required for a vehicle traveling at the adjacent roadway design speed to stop.
  - Downstream of all AET Sites, the Design-Build Team shall provide the aforementioned shoulder widths a length equal to the distance required for a stopped vehicle to reach the adjacent roadway design speed.
  - The minimum lengths noted above shall be in accordance with the 2004 AASHTO *A Policy on Geometric Design of Highways and Streets* Exhibits 10-70, 10-71 and 10-73. For traffic entering the AET facility, the minimum length shall be measured from the downstream end of the barrier protecting the site. For traffic exiting the AET facility, the minimum length shall be measured from the end of the taper shown on the AET Project Specific Drawings.

- With the exception of the NC 274 (Union Road) interchange and NC 273 (South Point Road) Ramps A and B, all ramps shall be designed and constructed to accommodate future loops with a minimum 230-foot radius. In addition, the structures at these interchanges shall be designed and constructed to accommodate the aforementioned future loops.

- The Design-Build Team shall provide 5" keyed in concrete monolithic channelization islands at all at-grade intersections with restricted movements.

- The Design-Build Team shall design and construct all lane drops from the outside edge of pavement.

- The Design-Build Team shall provide turn arounds on all roads that are dead-ended.

- Functional classifications that have a defined usable shoulder width shall have the appropriately wider overall shoulder width.

- The Garden Parkway is a full control of access facility. The Design-Build Team shall delineate the control of access on their Right of Way Plans for the NCTA's review and acceptance. The Design-Build Team shall be responsible for coordinating with, and obtaining approval from, the Engineer for the control of access fence location. The Design-Build Team shall be responsible for the design and installation of woven wire control of access fence in accordance with the NCDOT *Roadway Design Manual*.

- Unless determined during the right of way acquisition process to be economically unfeasible, the Design-Build Team shall design and construct service roads that provide the same or better access, widening and improvements shown on the June 9, 2010 Functional Design Map provided by the NCTA. Service roads that have average daily traffic volumes lower than 400 vehicles per day **and** are shorter than one-half mile may be designed to a 30 mph design speed. All other service roads shall be designed to a minimum 40 mph design speed. To the extent practical, all service roads shall be located outside the control of access. The Design-Build Team shall provide a credit to the NCTA for all service roads eliminated during the right of way acquisition process. The Design-Build Team shall indicate in the Technical Proposal how the service road horizontal and vertical alignments minimize right of way impacts.

- Any variations in the NCTA preliminary design and / or construction methods that nullify any decisions reached between the NCTA and the Environmental Agencies; and / or require additional coordination with the Environmental Agencies shall be the sole responsibility of the Design-Build Team. The NCTA will not allow any contract time extensions or additional compensation associated with any coordination or approval process resulting from design and / or construction modifications.

- The Design-Build Team shall not further impact any cultural, historical, or otherwise protected landmark beyond that shown on the June 9, 2010 Functional Design Map provided by the NCTA or as defined in the December 2010 Final Environmental Impact Statement. The Design-Build Team's design and / or construction shall not require right of way or easements from the aforementioned features beyond that shown on the June 9, 2010

Functional Design Map provided by the NCTA. In addition, the Design-Build Team shall adhere to the following:

- At all times, full access shall be maintained to the Harrison Family Dairy Farm existing driveway located on NC 274 (Union Road).
- There shall be no impacts to the culturally sensitive area associated with the Mount Pleasant Baptist Church cemetery located in the northwest quadrant of the South Point Road interchange.

- In accordance with the requirements noted below, the Design-Build Team shall design and construct a structure that allows the Carolina Thread Trail to cross the Garden Parkway on the east side of the Catawba Creek in the future:
  - At a minimum, this structure shall accommodate all the multi-use path requirements noted in the North Carolina Bicycle Facilities Planning and Design Guidelines, current on the Technical Proposal submittal date, for a ten-foot wide facility with a minimum 12-foot vertical clearance (measured from at least one foot above the 100-year flood elevation).
  - The Design-Build Team shall coordinate the aforementioned crossing of the Carolina Thread Trail, as well as accommodations for the remaining portions of the Carolina Tread Trail located in proximity to the Garden Parkway, with the Catawba Lands Conservancy and the NCTA. This coordination shall include, but not be limited to the following:
    - The Design-Build Team shall submit two copies of each greenway design submittal to the NCTA for review and acceptance. The Design-Build Team shall also provide the Catawba Lands Conservancy the appropriate number of copies for their review and approval and allow them a 20-day review period.
    - Prior to initiating construction of the greenway crossing, the Design-Build Team shall hold a coordination meeting with the NCTA and the Catawba Lands Conservancy.
    - The Design-Build Team shall provide coordinately correct electronic As-Built Plans of the greenway crossing to the Catawba Lands Conservancy.
  - There is a desire by the local communities for the construction and / or accommodation of the Carolina Thread Trail into the Garden Parkway Project beyond the aforementioned crossing. The Design-Build Team shall include in their Technical Proposal innovative methods for incorporation of the remaining portions of the Carolina Thread Trail located in proximity to the Garden Parkway.

- Excluding balloting, the Design-Build Team shall be responsible for all required sound barrier wall activities, including but not limited to developing a Final Design Noise Report, conducting required public involvement, performing geotechnical investigations, developing sound barrier wall envelope(s), designing sound barrier wall(s) and constructing sound barrier wall(s), in accordance with the requirements noted below. The Design-Build Team shall provide a mailing list of the property owners adjacent to the proposed sound barrier

walls and request the NCTA proceed with the balloting process. The Design-Build Team shall allow the NCTA 45 days from receipt of this written request to complete the balloting process.

- For informational purposes only, the *Traffic Noise Technical Memorandum* (July 2008), *Traffic Noise Technical Memorandum Addendum* (April 2010) and *Traffic Noise Technical Memorandum Addendum #2* (July 2011) will be provided to the Design-Build Team to assist in their determination of anticipated noise impacts and identify preliminary sound barrier wall / berm locations. The Design-Build Team is cautioned that these memoranda were prepared prior to the Date of Public Knowledge (Record of Decision approval date) and may not consider all required developments. As such, the Design Noise Report prepared by the Design-Build Team shall include a noise impact analysis for all developments that obtained a building permit prior to the Date of Public Knowledge.
- Based on NCDOT's *Traffic Noise Abatement Policy* (July 2011), NCDOT's *Traffic Noise Analysis and Abatement Guidance Manual* (August 2011) and FHWA regulations and policies, the Design-Build Team shall identify the location and quantity of sound barrier walls / berms (square footage / cubic yards of each) required for the Design-Build Team's design in the Technical Proposal.
- Following contract execution, the Design-Build Team shall develop a Design Noise Report for the Design-Build Team's final design, for FHWA and NCTA review and approval. This Design Noise Report shall optimize sound barrier walls and be based on the NCDOT and FHWA Policies in effect at the time the Record of Decision is approved. For sound barrier wall optimization, the Design-Build Team shall develop an analysis that achieves at least a 7 dB(A) noise level reduction at all front row receptors. If this analysis determines that the allowable quantity (area) benefit cannot be met, the sound barrier wall area may be reduced until it provides at least a 7 dB(A) noise level reduction at as many front row receptors as possible and remain within the allowable quantity (area) per benefit.
- The Design-Build Team shall design and construct all reasonable and feasible sound barrier walls supported by the NCTA balloting process.

- Unless noted otherwise elsewhere in this RFP, the maximum allowable cut and fill slopes shall be 2:1 (H:V). The slopes in the interchange area shall follow the requirements set forth in *the Roadway Design Guidelines for Design-Build Projects* located on the NCDOT Design-Build website.

- The Design-Build Team shall drain all ponds located partially or completely within the right of way and / or easements. For all drained ponds, the Design-Build Team, in consultation with the North Carolina Department of Environmental and Natural Resources' (DENR) Division of Water Quality (DWQ), shall 1) develop and execute a plan for restoration of the drained pond to a natural stream and / or wetland or 2) fill the pond with approved earth material if the aforementioned environmental agency deems a restoration plan is not feasible.

- The Design-Build Team shall indicate in the Technical Proposal all locations where borrow material will be obtained from and / or where waste material will be deposited within the proposed or existing NCTA / NCDOT right of way.

- The Design-Build Team shall indicate in the Technical Proposal all anticipated locations of asphalt / concrete plants, field offices and / or staging yards within the proposed or existing NCTA / NCDOT right of way. The NCTA will aggressively pursue approval of these facility locations, as well as acquisition of the necessary right of way; however, the use of right of way for these or other construction facilities / activities is not guaranteed.

- Unless otherwise approved by the NCTA Construction Manager and the property owner, the Design-Build Team shall maintain uninterrupted access to all driveways, both residential and commercial, throughout the project limits, regardless of multiple driveways accessing the same parcel.

- Excluding required revisions noted herein, the Design-Build team shall note in the Technical Proposal any proposed deviations to the preliminary design shown on the June 9, 2010 Functional Design Map, provided by the NCTA. After award of the contract, the Design-Build Team shall inform the NCTA, in writing, of any proposed changes to the June 9, 2010 Functional Design Map, previously reviewed submittals or the Design-Build Team's Technical Proposal and obtain approval prior to incorporation, excluding required revisions noted herein. Whether initiated by the Design-Build Team or directed by this RFP, the Design-Build Team shall be responsible for any activities, as deemed necessary by the NCTA or the FHWA, resulting from changes to the June 9, 2010 Functional Design Map, including but not limited to, public involvement, NEPA re-evaluation and coordination with other stakeholders. The NCTA will not honor any requests for additional contract time or compensation for completion of the required activities resulting from changes to the NCTA preliminary design.

- Along the Garden Parkway, design exceptions shall be required at all locations where bridge piers, concrete barrier and / or overhead sign assemblies reduce the median shoulder width to less than ten feet. No other design exceptions shall be allowed for the -L- Line, including all ramps and loops. NCTA prefers not to have design exceptions for the -Y- Lines and service roads. If the Design-Build Team anticipates any design exceptions for the -Y- Lines or service roads, they shall be clearly noted in the Technical Proposal. Prior to requesting / incorporating a design exception into the Final Plans, the Design-Build Team must obtain prior conceptual approval from NCTA and FHWA. If conceptual approval is obtained, the Design-Build Team shall be responsible for the development and approval of all design exceptions.

- The Design-Build Team shall submit Structure Recommendations and Design Criteria for NCTA and FHWA review and acceptance prior to submittal of the Preliminary Plans. The Design-Build Team shall develop Structure Recommendations that adhere to the format noted in the March 25, 2003 and September 1, 2004 memos from Mr. Jay Bennett, PE, NCDOT State Roadway Design Engineer. Excluding service roads, the design speed for all roadways shall be the greater of the minimum design speed for the facility type or the anticipated / actual posted speed plus five-mph. If a speed limit is not physically posted on an

existing facility, general statues mandate the speed limit as 55 mph, resulting in a 60 mph design speed.

- All guardrail and cable guiderail placement shall be in accordance with the July 2012 NCDOT *Roadway Standard Drawings* and / or approved details in lieu of standards. Along all 3:1 fill slopes, constructed at fill heights that are equal to or greater than 12 feet, the Design-Build Team shall install guardrail. Along all fill slopes steeper than 3:1, constructed at fill heights that are equal to or greater than six feet, the Design-Build Team shall install guardrail. The guardrail / guiderail design shall be submitted for review with the Preliminary Plans submittal.

- All cable guiderail installed in the Garden Parkway median shall adhere to the High Tension Cable Barrier System Project Special Provision found elsewhere in this RFP.

- Unless otherwise noted in this RFP, the Design-Build Team shall design and construct bridge rail offsets that are the greatest of (1) as indicated in the NCDOT *Roadway Design Manual,* (2) equal to the entire width of the approach roadway paved shoulders, or (3) equal to the width to accommodate the future sidewalk as required elsewhere in this Scope of Work. For long bridges that do not require future sidewalk accommodations, bridge rail offsets may be reduced from the aforementioned requirements (1) and (2) in accordance with the NCDOT *Bridge Policy 2000*.

- The Design-Build Team shall be responsible for the evaluation of the algebraic difference in rates of cross slope (roll-over) between existing shoulders and roadways and the associated suitability for carrying traffic during construction, if necessary. In the event that the roll-over is found to be unacceptable for the proposed temporary traffic patterns, the Design-Build Team shall be responsible for providing cross slopes that meet design standards and eliminate roll-over concerns.

- Within the vehicle recovery area, the Design-Build Team shall design and construct single face concrete barrier in front of all retaining walls, all elements acting as a retaining wall and all sound barrier walls that are subject to vehicular impact.

- Excluding haul roads, the Design-Build Team shall design and construct resurfacing grades for all roadways impacted by construction. All resurfacing grades shall adhere to the design criteria and standards, provide all required pavement wedging (Reference the Pavement Management Scope of Work found elsewhere in this RFP) and adhere to the minimum requirements noted below:
    - The Design-Build Team shall resurface all lanes and shoulders of an undivided facility throughout the limits of proposed widening and construction.
    - The Design-Build Team shall resurface each one-way roadway of a divided facility throughout the limits of the one-way roadway widening and construction, allowing varying resurfacing limits for the opposing directions of travel.
    - For both divided and undivided facilities, the Design-Build Team shall resurface all lanes and shoulders within the outermost construction limits of all proposed widening

and construction, including any gaps along the facility where construction activities are not required.

- The Design-Build Team shall resurface all existing facilities to the limits of pavement marking obliterations / revisions.

- At all ramp and loop intersections, the design vehicle for all turning movements shall be a WB-65. The design vehicle for all other turning movements shall be a WB-50.

- As shown in the NCDOT *Roadway Design Manual*, roadways that require Ditch Typical B or C shall be designed and constructed with the minimum ditch front slope width or the existing ditch front slope width, whichever is greater.

- Two (2) sites of concern were indentified in the *GeoEnvironmental Impact Evaluation Report*. These sites include one underground storage tank facility and one race track. After the NCTA acquires each of these parcels, the Design-Build Team shall remove and dispose of all above ground structures within the right of way. The NCTA will remove all underground storage tanks and necessary contaminated material from the right of way within 60 days of written notification that the above ground structures have been removed. If required to complete construction, the NCTA will remove contaminated soil located within the construction limits and replace with suitable backfill. All remaining contaminated soil shall be left in place undisturbed.

  The NCTA attempted to perform a geophysical investigation on the James R. Willard, Jr. property, Site # 28 (Jim's Grocery & South Point Grill, 1901 South Point Road Belmont, NC 28012). The property owner would not allow the investigation to occur; however it is anticipated that there are four underground storage tanks (UST) with the potential for soil and groundwater contamination. After the NCTA acquires each of these parcels, the NCTA will conduct a geophysical investigation and the Design-Build Team shall remove and dispose of all above ground structures within the right of way. The NCTA will be responsible for all remediation required for the USTs and / or contaminated material. The NCTA shall require 60 days after acquisition of the right of way to complete the geophysical investigation. The NCTA shall require an additional 60 days, after receiving written notification from the Design-Build Team that the above ground structures have been removed, to remove all USTs and necessary contaminated material from the right of way. If required to complete construction, the NCTA will remove the contaminated soil located within the construction limits and replace with suitable backfill. All remaining soil shall be left in place undisturbed. If these 60-day timeframes are exceeded, the NCTA will consider a time extension in accordance with Article 108-10 of the Standard Special Provision, Division One, found elsewhere in this RFP.

  The NCTA will obtain the appropriate identification numbers and sign the shipping manifests as the generator.

  Unknown contaminated sites encountered during construction shall be addressed by Article 107-25 of the 2012 NCDOT *Standard Specifications for Roads and Structures.*

General

- The design shall be in accordance with the 2004 AASHTO *A Policy on Geometric Design of Highways and Streets,* 2002 NCDOT *Roadway Design Manual,* including all revisions effective on the Technical Proposal submittal date, 2012 *NCDOT Roadway Standard Drawings,* or as superseded by detail sheets located at http://ncdot.gov/doh/preconstruct/ps/std_draw/*, Roadway Design Policy and Procedure Manual, Roadway Design Guidelines for Design-Build Projects,* 2012 *Standard Specifications for Roads and Structures,* the 2002 AASHTO *Roadside Design Guide, 3rd Edition* and 2006 *Chapter 6 Update* and other Department and NCTA guidelines referenced in this RFP.

- If the NCDOT *Roadway Design Manual*, the 2004 AASHTO *A Policy on Geometric Design of Highways and Streets*, the 2012 *NCDOT Roadway Standard Drawings* and / or any other guidelines, standards or policies have desirable and / or minimum values, the Design-Build Team shall use the desirable values unless noted otherwise elsewhere in this RFP. In case of conflicting design parameters in the various resources, the proposed design shall adhere to the most conservative values, unless noted otherwise elsewhere in this RFP.

- A sag vertical curve low point shall not be located on any bridge or approach slab.

- The Design-Build Team shall identify the need for any special roadway design details (i.e. any special drainage structures, rock embankment, rock plating, special guardrail, retaining walls, concrete barrier designs, etc.) and shall provide special design drawings. The NCTA or NCDOT may have special details available that can be provided to the Design-Build Team upon request.

Information Supplied

- The NCTA will provide copies of the DEIS (Draft Environmental Impact Statement), FEIS (Final Environmental Impact Statement), the latest list of environmental commitments, municipal agreements and all pertinent approvals and correspondence. Unless noted otherwise elsewhere in this RFP, the Design-Build Team shall adhere to all commitments stated in the environmental documents.

- The NCTA will provide electronic surveys. Any supplemental surveys, including but not limited to additional topography, existing and proposed roadway, structure sites, underground and overhead utilities, existing and proposed drainage and wetland / stream delineation shall be the responsibility of the Design-Build Team to acquire and process. Known existing utilities have been located and will be included with the survey data. The Design-Build Team shall be responsible for confirming the location of the utilities and the type / size of the facilities. All supplemental SUE work shall be the responsibility of the Design-Build Team.

- The NCTA will provide the June 9, 2010 Functional Design Map for the project. The Design-Build Team is cautioned that the preliminary designs shown on this map are provided solely to assist the Design-Build Team in the development of the project design. The Design-Build Team shall be fully and totally responsible for the accuracy and completeness of the

project design, including, but not limited to, the use of the NCTA design, the use of portions of the NCTA design or modifications to the NCTA design.

- The NCTA will provide the *Final Traffic Capacity Analysis Technical Memorandum* dated September 2011.
- The NCTA will provide a geotechnical subsurface investigation for the project. The Design-Build Team shall be responsible for any additional geotechnical information, all geotechnical recommendations, as well as supplemental structural and roadway investigations. (Reference the Geotechnical Engineering Scope of Work found elsewhere in this RFP)
- The NCTA will provide final pavement designs for the project. The Design-Build Team shall be responsible for all temporary pavement designs. (Reference the Pavement Management Scope of Work found elsewhere in this RFP)
- Geoenvironmental information will be provided as follows:

    1. GeoEnvironmental Impact Evaluation Report dated January 28, 2008
    2. Hazardous Materials Report dated October 28, 2009
    3. Right of Way Recommendations dated June 1, 2011
    4. Preliminary Site Assessments

STRUCTURES SCOPE OF WORK (11-22-11)

Project Details

The Design-Build Team shall be responsible for the design and construction of all structures necessary to complete the project, including the following:

Grade separation crossings intersecting the mainline:

- Wilson Farm Road (SR 2428)
- Union Road (NC 274)
- Rufus Ratchford Road (SR 2431)
- South New Hope Road (NC 279)
- South Point Road (NC 273)
- Dixie River Road (SR 1155)
- I-485

Stream crossings:

- Catawba Creek
- South Fork of the Catawba River, including Gaither Road
- Catawba River, including rail spur just west of the Catawba River serving Duke Energy's Allen Steam Station

Railroad crossings:

- Rail spur serving the Charlotte Douglas International Airport intermodal facility just east of I-485
- Rail spur serving Duke Energy's Allen Steam Station (as noted above)

For bridges crossing over the Garden Parkway, any interior bents in the median shall be located at the center of the median or placed to account for future lane widening.

The bridges over the Garden Parkway shall have sufficient length and vertical clearance to accommodate future widening in the locations, and to the extent, required in the Roadway Scope of Work.

The bridges over existing I-485 shall have sufficient length and vertical clearance to accommodate the future widening of existing I-485, without a design exception, for six (6) lanes (5 through lanes and 1 auxiliary lane) in each direction with median barrier separation.

All bridges shall have sufficient width, length, and barrier rail to provide sidewalk and bicycle accommodations constructed as part of this project as noted in the Roadway Scope of Work.

Bridge lengths shall be designed and constructed to accommodate a future curb and gutter section with sidewalk in a ten foot wide berm under the bridge and bridge widths shall be designed and constructed to accommodate placement of a future sidewalk on the bridge. Reference the Roadway Scope of Work for specific locations.

The Design-Build Team shall be responsible for the design and construction of all sound barrier walls required by the Final Design Noise Report, including any geotechnical investigations necessary to design the foundations. The Design-Build Team shall be responsible for the wall envelope details (reference Roadway Scope of Work).

The anticipated sound barrier wall locations are as follows:

- Westbound side of mainline which is West of NC 273, near the Brook Forest Subdivision
- Westbound side of mainline which is East of NC 273 and West of the Catawba River

The Design-Build Team is responsible for wall envelopes, design, and construction of all retaining walls necessary to construct the project.

The minimum vertical clearance over Norfolk Southern Railroad is 23'-0". The NCTA has verified the following information for the proposed railroad structure locations:

- Proposed Garden Parkway Overhead Bridge over Duke Plant Allen Spur; springing from M.P. 388.26 (Piedmont). At this location, horizontal clearance for a total of two (2) main tracks plus a maintenance roadway is required.
- Proposed West Blvd. Ext. Overhead Bridge over Proposed Norfolk Southern Intermodal Yard; springing from M.P. 385+/- (Piedmont). At this location, vertical and horizontal clearances are already set by the completed West Boulevard Extension (NBL). The proposed West Boulevard Extension (SBL) structure shall be constructed with equal, or greater, clearances.

The Design-Build Team shall provide a context sensitive structure which will allow recreational boating optimal access and diminish debris collection under the South Fork Catawba River and Catawba River crossings, by limiting the number of bents and piles/drilled shafts within the water while remaining economically conscious.

The Design-Build Team shall not increase impacts to the South Fork Catawba River and Catawba Rivers Lake Wylie beyond that currently documented in NCTA's Conveyance Permit application.

Recreational boating use of the Catawba River and South Fork Catawba River shall be maintained at all times. During construction an unobstructed navigable channel shall be maintained for recreational boaters, which shall be clearly designated by reflective markers and/or signing. This channel shall have a minimum width of 36 feet, a minimum vertical clearance of 12 feet and shall be located in a minimum water depth of 6 feet.

Limited, short term closures of the recreational boating channel may be permitted if the Design-Build Team can demonstrate to the NCTA the necessity due to constructability issues and/or unreasonable financial costs. In the event of a temporary closure of the recreational boating channel, the Design-Build Team shall develop and implement a public information campaign to provide 30 days of prior notice to the Lake Wylie Marine Commission and to the recreational boating community.

General

The Design-Build Team's primary bridge design firm shall be on the NCDOT Highway Design Branch's list of firms qualified for structure design and maintain an office in North Carolina.

Design shall be in accordance with the latest edition of AASHTO *LRFD Bridge Design Specifications* (with exceptions noted in the NCDOT *Structure Design Manual*), NCDOT *Structure Design Manual* (including policy memos), NCDOT *LRFD Driven Pile Foundation Design Policy*, and the NCDOT *Bridge Policy Manual* except as noted elsewhere in this RFP.

All bridges shall meet approved Roadway typical sections and grades. Bridge geometry (width, length, skew, span arrangement, etc.) shall be in accordance with approved Structure Recommendations and approved Hydraulic Bridge Survey Reports. The minimum vertical clearance over all roadways shall be at least that shown in the Roadway Design Manual per the given facility type. All vertical clearances shall be set to accommodate future widening of those facilities identified for future widening in the Roadway Scope of Work.

Construction and materials shall be in accordance with the current 2012 *Standard Specifications for Roads and Structures*, NCDOT Structure Design Unit Project Special Provisions, and NCDOT Structure Design Unit Standard Drawings.

Alternate designs, details, or construction practices (such as those employed by other States, but not standard practice in North Carolina) are subject to NCDOT review and shall be evaluated on a case by case basis.

The following will not be allowed on the project:

- Empirical method for deck design
- Precast cored slab or box beams
- Cast-in-place deck slab bridges
- Casting of conduit in the bridge decks
- Casting of conduit in bridge rails unless otherwise required by the Lighting Scope of Work
- Bridge attachments (e.g. ITS conduit, water lines) in the overhang of grade separations
- Monotube or cantilever DMS support structures
- Attachment of sign structures to bridges
- Prefabricated arch culverts and aluminum box culverts
- Fracture critical structures

A live load rating chart for girders and culverts shall be included with the plans and shall state design assumptions and methodology used in the load rating calculations. The load rating shall be in accordance with the NCDOT *Structure Design Manual* (including policy memos) and the AASHTO *Manual for Bridge Evaluation*.

The Design-Build Team is responsible for all culverts and culvert extensions necessary to complete the project. Reinforced concrete box culverts shall be in accordance with Hydraulic Culvert Survey Reports prepared by the Design-Build Team and accepted by the Department.

The Design-Build Team shall adhere to all permit, FEMA, and hydraulic design criteria when designing culverts and culvert extensions.

All bridge rails shall satisfy the appropriate NCHRP test level for that facility. Precast barrier rails shall not be allowed. Aesthetic treatments are required as detailed in the Aesthetic Design Scope of Work.

Bridge Removal

The Design-Build Team shall be responsible for the removal and disposal of the existing bridge at Garrison Road (SR 1148) and I-485, if required by final design. However, retaining the existing bridge is preferred.

The Design-Build Team shall be responsible for handling, removing, shipping and disposing of these materials in accordance with the 2012 *Standard Specifications for Roads and Structures*.

Aesthetics Design

Bridges, sound barrier walls, retaining walls, gantries, overhead sign structures, and all-electronic toll (AET) collection support buildings shall have aesthetic treatments as required by the Aesthetics Design Scope of Work.

All-Electronic Tolling (AET) Infrastructure

The Design-Build Team shall be responsible for the design and construction of the infrastructure required to support the toll collection system. Reference the AET Toll Zone Scope of Work.

PAVEMENT MANAGEMENT SCOPE OF WORK (11-07-11)

The Design-Build Team shall choose from the mainline pavement alternates presented in this scope of work unless otherwise submitted and approved as an Alternate Technical Concept. The mainline pavement type and structure shall be consistent throughout the project, unless otherwise allowed herein. The Design-Build Team shall commit to the pavement design presented in the Technical Proposal. The selection of an asphalt mainline pavement or concrete mainline pavement will be binding for the duration of the contract.

The Design-Build Team shall use one of the following alternates for the construction of the -L- line travel lanes:

Alternate 1	Alternate 2	Alternate 3	Alternate 4
3.0" S9.5C	3.0" S9.5C	3.0" S9.5C	11.5" Concrete
4.0" I19.0C	3.0" I19.0C	2.5" I19.0C	3.0" PADC
7.0" B25.0C	4.5" B25.0C	3.0" B25.0C	1.25" SF9.5A
Subgrade Stab.	8.0" ABC	8.0" CTABC	Subgrade Stab.
	Subgrade Stab.	Subgrade Stab.	

Alternates 1, 2, and 3, Asphalt Pavement

The median paved shoulder and the first 4 feet of the outside paved shoulder shall use the travel lane pavement design, except that the outside shoulders may include 3.0" of S9.5B in lieu of the 3.0" of S9.5C. The pavement design for the remaining 8 feet of the outside paved shoulder shall consist of:

- 3.0" S9.5C or S9.5B
- 2.5" I19.0C
- 4.0" B25.0C or 8.0" ABC

Alternate 4, Concrete Pavement

The mainline outside lane shall be constructed 14-feet in width, 2-feet of which will be outside shoulder with dowel bars and shall have the same superelevation as the outside travel lane. This two-foot concrete shoulder shall not extend into the acceleration, deceleration or auxiliary lanes. The 14-foot outside lane pour is not required for acceleration, deceleration and auxiliary lanes. The 14-foot pour is also not required within the gore, except where the taper width is 2-foot or less. The Design-Build Team may elect to utilize either concrete or asphalt for the paved shoulders. Regardless of the pavement type selected, consistency shall be retained throughout the project to include both median and outside shoulders. The Design-Build Team shall specify the shoulder pavement type within their Technical Proposal. If asphalt pavement is selected for the shoulders, the remaining 10-foot outside shoulders may be partial depth with the following pavement structure:

3.0" S9.5C or S9.5B
2.5" I19.0C
4.0" B25.0C or 8.0" ABC.

The median shoulder and shoulders of 4-feet in width shall use the following pavement structure:

3.0" S9.5C or S9.5B
3.0" I19.0C
5.5" minimum B25.0C.

If concrete pavement is selected for the shoulders, the shoulder pavement design shall be a minimum thickness of 8.5" jointed concrete, without dowels, with a joint spacing matching the adjacent mainline pavement, anchored to the mainline pavement with tie bars.

Concrete pavement for the travel lanes shall be doweled jointed concrete with 15 ft. uniform joint spacing.

Subgrade Stabilization shall be to a minimum depth of 8 inches for lime and 7 inches for cement. The type of subgrade stabilization and the amount of stabilizing agent shall be determined in accordance with the Cement and Lime Stabilization of Subgrade Soils Project Special Provision found elsewhere in this RFP.

Other pavement designs for this project are listed in the table below:

LINE	Surface	Intermediate	Base	ABC	Stab.
J1Y143 (NC 274), Y211 (NC 279), 18RA, 18LC, Y206 (NC 273), 22BRA, 22BRD, Y207 (Dixie River Rd.), 24LB, 24LC, 25ARD, 25ARAC, and 25ALC	3.0" S9.5B	4.0" I19.0B	-----	8.0"	No
J1Y145 (Wilson Farm Rd.), 15RA, 15RB, 15RC, 15RD, 18RB, 18RC, 18RD, 22BRB, 22BRC, 24RB, 24RC, and 25ARA	3.0" S9.5B	2.5" I19.0B	-----	8.0"	No
SR9, SR11, SR12, SR15A, SR16, SR17, 24ASR1, and SR18	2.5" SF9.5A	-----	-----	8.0"	No
Y210 (I-485)	3.0" S9.5C	4.0" I19.0C	10" B25.0C	-----	No
25ARB and 25ARCA	3.0" S9.5C	3.0" I19.0C	3.0" B25.0C	8.0"	No
25ARC	3.0" S9.5C	3.0" I19.0C	4.0" B25.0C	8.0"	No
25ARDB	3.0" S9.5C	3.0" I19.0C	4.5" B25.0C	8.0"	No

The placement of any asphalt layer (regardless of type) 3.0" or less on ABC shall require the application of prime coat.

Warm mix asphalt will be allowed on the Y-lines, but not on the L-line, ramps, and loops.

The minimum depth for overlaying the existing pavement on the -Y- Lines shall be the full thickness of surface course as given in the above table. For the -Y- Lines noted in the table above, the Design-Build Team may substitute an asphalt base course layer for an ABC layer. If such an alternative is proposed, the Design-Build Team shall use an asphalt base course mix that matches the asphalt base course mix specified for the roadway. If an asphalt base course mix is not specified, the Design-Build Team shall use B25.0B base course. The additional thickness of the asphalt base course, used as a substitute for the ABC layer, shall be equal to half of the proposed ABC thickness specified for the roadway. The Design-Build Team shall maintain the same pavement design throughout the -Y- Line construction limits. In the Technical Proposal, the Design-Build Team shall specify the base option chosen (ABC vs. asphalt) for all -Y- Lines. The Design-Build Team may substitute an asphalt base course layer for an ABC layer, as described above, for tie-ins and narrow widening.

On all ramps, the adjacent through lane pavement and shoulder structure design shall extend to the back of the gore (12-foot width).

Longitudinal joints of all surface course layers shall not be located in the final traffic pattern wheel path. The Design-Build Team shall indicate where all underlying longitudinal joints will be located and demonstrate how the underlying longitudinal joint location will minimize reflective cracking.

Unless noted otherwise elsewhere in this RFP, the minimum widened width shall be six feet. The minimum widened width may be reduced to four feet only if the Design-Build Team demonstrates that their equipment properly compacts narrow widening and obtains prior NCTA approval. Tapers that tie proposed pavement to existing pavement are excluded from the narrow widening requirements noted above.

In areas where the existing paved shoulders are proposed to be incorporated into a permanent travel lane, the Design-Build Team shall be responsible for evaluating the existing paved shoulder regarding its suitability for carrying the projected traffic volumes. In the event that the existing paved shoulder is found to be inadequate, the Design-Build Team shall be responsible for upgrading the existing paved shoulder to an acceptable level or replacing the existing paved shoulder. The Design-Build Team shall submit their evaluation and proposed use of existing paved shoulders to the Engineer for review and acceptance or rejection.

The Design-Build Team shall be responsible for the design of all temporary pavements and for the evaluation of existing shoulders and roadways, including off-site detour routes, regarding their suitability for carrying traffic during construction. In the event that the existing shoulders and roadways are found to be inadequate for the proposed temporary traffic volumes and duration, the Design-Build Team shall be responsible for upgrading the pavement to an acceptable level. Pavements shall be designed in accordance with the most recent version of the North Carolina DOT Pavement Design Procedure. Pavement designs are to be submitted for review and comments using the contract submittal process. The expected duration for traffic on temporary pavement must be included as part of the submittal.

All driveways, up to the radius point, shall be constructed with the full-depth pavement design of the intersecting roadway. The entire impacted length of all non-concrete driveways with a 10% or steeper grade shall be constructed with 1.5" S9.5B and 8" ABC. Unless otherwise noted above, the Design-Build Team shall adhere to the following for all driveway construction:

- For existing gravel and soil driveways, use 8" ABC.
- For existing asphalt driveways, use 1.5" S9.5B and 8" ABC.
- For existing concrete driveways, use 6" jointed concrete reinforced with woven wire mesh.

The rate of application and the maximum and minimum thickness per application and layer shall be in accordance with the NCDOT *Roadway Design Manual*.

The Design-Build Team shall be responsible for the design and construction of shoulder drains and outlets. Shoulder drains shall be placed to drain the entire L-line pavement structure. The shoulder drain design and outlet locations are to be submitted to the Transportation Program Management Director for review and acceptance or rejection.

For mainline asphalt pavement, shoulder drains shall be provided on the both sides of typical crown sections, on the low side of superelevated sections, throughout all sag vertical curves, throughout crest vertical curves located in cut sections, and where the grade is less than 1%.

For mainline concrete pavement, continuous shoulder drains and outlets shall be used. Shoulder drains shall be provided on both sides of typical crown sections, and on the low side of superelevated sections.

Outlets shall be provided approximately every 300 feet. In the median, if drainage structures are spaced at more than 300 feet, the outlet spacing may be increased to 500 feet in those areas.

The Design-Build Team shall pave from the edge of the proposed paved shoulder to the face of all guardrails with 6" of ABC (or 4" B25.0B or B25.0C), prime coat at the normal application rate and at least one lift of surface course. In these areas, the Design-Build Team's installation of ABC or black base shall be consistent with the pavement type for the specific roadway. As an alternative to the above pavement design for paving the shoulders to the face of the guardrail, the Design-Build Team may use the adjacent travel lane pavement design.

When a resurfacing grade ties to existing pavement, the Design-Build Team shall perform incidental milling, such that the new pavement ties flush with the existing pavement. When tying to the existing pavement, the Design-Build Team shall not reduce the minimum required surface layer pavement thickness noted above. The Design-Build Team shall not perform incidental milling more than 72 hours prior to placement of the asphalt surface layer.

Alternate Technical Concepts – Mainline Pavement Design Only

Alternative Technical Concepts that provide an alternate mainline pavement design will be considered subject to the following restrictions:

- Proposed pavement designs must have at least a 30 year design life established using the current NCDOT Pavement Design Procedure or the Mechanistic-Empirical Pavement Design Guide, Darwin ME, version 1.0.
- The design in the ATC must be sealed by a professional engineer that has prior experience in pavement design using the Mechanistic-Empirical Pavement Design Guide on similar size and type facilities. The ATC submittal shall include a brief resume or description of the designer's pavement design experience.
- In advance of the pavement design ATC, the proposed Mechanistic-Empirical Pavement design parameters shall be provided for approval.
- Clear and convincing support must be provided for choices made for design parameters.
- All pavement designs shall include chemical stabilization of the subgrade.
- Concrete pavement designs shall include a permeable drainage layer and a separator layer below the drainage layer.

ATCs complying with the above restrictions will be evaluated by the technical review panel in accordance with the usual ATC process, with the exception that NCDOT will return responses within 15 business day. The NCTA reserves the right to engage a recognized pavement design expert to assist with the ATC evaluations.

Calculation sheets for the pavement designs contained herein will be provided, along with the current NCDOT Pavement Design Procedure.

Reference the All-Electronic Tolling (AET) Infrastructure SOW for the pavement requirements under the AET gantries at the mainline and other locations.

The full width of the inside and outside shoulders throughout the AET tolling zones, where loop detection will be utilized, shall be same pavement design as the adjacent travel lane pavement. The AET Toll Zone limits are defined as the pavement beginning 100 feet prior to the first AET gantry span and extending through the toll zone and a length of 100 feet beyond the second AET gantry span for a minimum length of 250 linear feet.

The Design-Build Team shall coordinate with the toll integrator and adjust the transverse joint spacing layout and reinforcement layout, within the AET tolling zone, to avoid detection loop constructability or operation issues. Metal reinforcement, metal dowel bars, metal tie-bars, metal mesh reinforcement or electro-magnetic emitting wiring or cabling cannot be installed within 6 inches, in all directions, of a detection loop. Do not exceed 22 feet between any two transverse joints.

HYDRAULICS SCOPE OF WORK (11-07-11)

Project Details

The Design-Build Team shall:

- Employ a private engineering firm that is prequalified with the NCDOT for Hydraulic Design to perform all hydraulic design work required by this contract. The private engineering firm shall be prequalified for hydraulics design work under the Department's normal prequalification procedures prior to the Price Proposal submittal.

- Hold a pre-design meeting with the NCTA, Transportation Program Management Director and the Hydraulic Review Engineer upon acceptance of the Preliminary Roadway Plans developed by the Design-Build Team.

- Design all storm drainage systems within the project limits using Geopak Drainage. The Department will provide preliminary hydraulics designs developed for the portion of the project from NC 279 (South New Hope Rd.) to I-485 that were developed for the permitting.

- Design all ditches with a minimum 0.30% grade and avoid constructing ditches in wetlands.

- Prepare Pre-Design and Post Construction Analyses for outfalls where discharges have been increased by the project and design appropriate measures to ensure the increased runoff does not adversely impact downstream properties.

- Design Stormwater Controls and develop a Stormwater Management Plan using Best Management Practices per the latest NCDOT Stormwater Best Management Practices Toolbox.

- Provide a bridge or cast-in-place reinforced concrete box culvert for all structures requiring a hydraulic conveyance greater than a single 72 inch pipe.

- Provide Culvert and Bridge Survey Reports for structures in accordance with the guidelines in the General section below. The Department will provide copies of Bridge Survey and Hydraulic Design Reports for crossings of Catawba Creek, South Fork Catawba River and Catawba River that were developed for permitting. If the designs are modified at these locations, submit new signed / sealed Bridge Survey Reports.

- Design bridge drainage without the use of Bridge Scuppers (open-grated inlets). If a closed drainage system is used on a bridge, the closed drainage system shall use vertical pipes through the deck, installed at the flow line, and shall be consistent with that shown in the current NCDOT Stormwater Best Management Practices Toolbox.

- Prepare a CLOMR package for any FEMA regulated streams impacted by the design. For replacement of existing structures only, a MOA package may be submitted in lieu of the CLOMR if MOA requirements are met. No construction activity shall occur in FEMA regulated floodplains prior to the CLOMR or MOA approval. The North Carolina Floodplain Mapping Program (NCFMP) is the review authority for MOA / CLOMR

packages and associated models. Should the NCFMP not approve the MOA, the Design-Build Team will be required to obtain a CLOMR. The NCTA will not allow any contract time extensions or additional compensation associated with the MOA / CLOMR process. The NCTA will be responsible for submitting MOA / CLOMR packages to the NCFMP and all associated fees.

- Provide sealed "Record" Plans for structures in FEMA regulated floodplains that adhere to the approved FEMA submittal upon completion of the project.

- Conduct an interagency hydraulic design review meeting (4B) and an interagency permit impacts meeting (4C) prior to submittal of the environmental permit modification application. All redesigns resulting from the hydraulics and permit review meetings shall be the responsibility of the Design-Build Team. For the 4B Meeting, the Design-Build Team shall submit accepted Roadway Plans and schematic hydraulic designs to the Department a minimum of five weeks prior to the scheduled meeting date. For the 4C Meeting, the Design-Build Team shall provide accepted hydraulic design plans, permit drawings and permit impact summary sheets to the Transportation Program Management Director a minimum of five weeks prior to the meeting. The Design-Build Team shall take minutes of each meeting and provide them to the Department within three business days.

- Provide revised permit drawings, impact summary sheets, forms and all other documents necessary for any modifications to the USACE 404 Permit and NCDWQ Section 401 Certification, including Catawba Buffer Impacts, in accordance with the *Guidelines for NCDOT Permit Drawings,* dated August 31, 2009 and any addendums.

General

Design in accordance with criteria provided in the North Carolina Division of Highways *Guidelines for Drainage Studies and Hydraulics Design-1999* and the addendum *Handbook of Design for Highway Drainage Studies-1973,* North Carolina Department of Transportation "Stormwater Best Management Practices Toolbox – 2008" and the North Carolina Division of Highways Hydraulics Unit website:

http://www.ncdot.org/doh/preconstruct/highway/hydro/

GEOTECHNICAL ENGINEERING SCOPE OF WORK (10-31-11)

(A) GENERAL

All geotechnical data, tests, computations and supporting subsurface investigations and documentation submitted by the Design-Build Team shall be provided in English Units.

Obtain the services of a firm prequalified for geotechnical work by the Highway Design Branch List. The prequalified geotechnical firm shall prepare foundation design recommendation reports for use in designing structure foundations, roadway foundations, retaining walls, sound barrier foundations, overhead sign structure and luminary foundations, and temporary structures.

The Engineer of Record who prepares the foundation design recommendation reports shall be a Professional Engineer registered in the State of North Carolina who has completed a minimum of three geotechnical design projects of scope and complexity similar to that anticipated for this project using the load and resistance factor design (LRFD) method and in accordance with the latest edition of the AASHTO *LRFD Bridge Design Specification*. If the Engineer of Record cannot demonstrate the aforementioned LRFD experience, then the design must undergo a peer review by an individual with such experience. In such case, the reviewer must be a registered Professional Engineer, but not necessarily in the State of North Carolina. Prior to the first geotechnical design submittal, the Design-Build Team shall provide a letter to the NCDOT Design-Build Office that documents the reviewer's LRFD experience for review and acceptance. Furthermore, with each geotechnical design submittal, the reviewer shall provide a sealed letter stating that he / she has carefully reviewed and approved the specific submittal details.

The prequalified geotechnical firm shall also determine if additional subsurface information, other than that required and noted elsewhere in this RFP, is required based upon the subsurface information provided by the NCDOT and the final roadway and structure designs. If a determination is made that additional subsurface information is required; the Design-Build Team shall use a prequalified geotechnical firm to perform all additional subsurface investigation and laboratory testing in accordance with the current NCDOT Geotechnical Engineering Unit *Guidelines and Procedures Manual for Subsurface Investigations*. Submit additional information collected by the Design-Build Team to the Geotechnical Engineering Unit for review. The Design-Build Team shall provide the final Subsurface Investigation report in electronic and hardcopy format to the NCDOT for its records.

A minimum of 2 standard penetration test (SPT) / rock core borings shall be required per bent for all bridges except dual bridges. A minimum of 3 SPT / rock core borings shall be required across the roadway typical section, at each bent location for dual bridges. All borings shall be located within 100 feet of the centerline of each bent location to be counted for these minimum requirements. Extend all borings to a depth below the foundation element required to show a complete subsurface profile. The Design-Build Team shall be responsible for obtaining the borings noted above for all bents where subsurface information is not sufficient or is warranted by variability in the geology unless

the prequalified geotechnical firm submits documented justification that the subsurface investigation provided by the NCDOT is adequate for design purposes and the justification is acceptable to the Department. Any deviations to the requirements noted above shall require acceptance from the NCDOT Geotechnical Engineering Unit prior to construction.

The maximum spacing between borings for retaining walls and sound barrier walls shall be 200 feet, with a minimum of two borings; one at each end of the wall. Drill borings for retaining walls a minimum depth below the bottom of the wall equal to twice the maximum height of the wall. Boring depths for sound barriers shall be equal to the maximum height of the wall or to SPT refusal.

The Design-Build Team is permitted to design bridges on this project using software that accounts for the structural effects of soil / pier interaction.

(B) DESCRIPTION OF WORK

Unless otherwise noted herein, the Design-Build Team shall design foundations (except sign foundations), embankments, slopes, retaining walls, and sound barriers in accordance with the current edition of the AASHTO *LRFD Bridge Design Specifications*, NCDOT *LRFD Driven Pile Foundation Design Policy,* all applicable NCDOT Geotechnical Engineering Unit Standard Provisions, NCDOT *Structure Design Manual*, and NCDOT *Roadway Design Manual*. The NCDOT *LRFD Driven Pile Foundation Design Policy* is located on the NCDOT Geotechnical Engineering Unit's website at:

www.ncdot.org/doh/preconstruct/highway/geotech/LRFDPolicy/

For *Geotechnical Guidelines for Design-Build Projects*, the Design-Build Team shall adhere to the guidelines located at the following website:

www.ncdot.org/doh/preconstruct/altern/design_build/default.html

1. Structure Foundations

Key in spread footings of structures crossing streams a minimum of full depth below the 100-year design scour elevation and provide scour protection in accordance with scour protection detail in the NCDOT *Structure Design Manual*.

Permanent steel casings shall be required for drilled piers that are constructed in six inches or more of water. Permanent steel casings are required for drilled piers constructed on sloped stream banks subject to degradation from flooding.

When the weathered rock or rock elevation is below the 100-year hydraulic scour elevation, the 100-year and 500-year design scour elevations are equal to the 100-year and 500-year hydraulic scour elevations from the structure survey report accepted by the NCDOT Hydraulics Unit. When the weathered rock or rock elevation is above the 100-year hydraulic scour elevation, the 100-year design scour elevation may be considered equal to the top of the weathered rock or rock elevation, whichever is higher, and the 500-year design scour elevation may be set two feet below the 100-year design scour elevation.

End bent fill slopes up to 35 feet in height (defined as the difference between grade point elevation and finished grade at toe of slope) shall be 1.5:1 (H:V) or flatter. End bent fill slopes with heights greater than 35 feet shall be 2:1 or flatter. All end bent cut slopes shall be 2:1 or flatter. For 1.5:1 fill slopes, extend end bent slope protection from the toe of slope to berm and to 1.75:1 (H:V) slope or to the limits of the superstructure. For cut slopes and for 2:1 or flatter end bent fill slopes, extend end bent slope protection from the toe of slope to berm and to the limits of the superstructure.

Analyze drilled pier and pile bent foundations using either LPile or FB-Pier. Design drilled piers and vertical piles with a sufficient embedment in soil and/or rock to achieve "fixity".

Design sound barrier foundations in accordance with current allowable stress design AASHTO *Guide Specifications for Structural Design of Sound Barriers*. A minimum factor of safety of 1.5 shall be required for shaft embedment depths.

2. Roadway Foundations

Unless otherwise noted herein, all unreinforced proposed fill slopes shall be 2:1 (H:V) or flatter except bridge end bent slopes (see Section A – Structure Foundations). In order to eliminate "sliver fills" that are difficult to tie into existing fill slopes, the Design-Build Team can use a slightly steeper slope at the top of fill, provided the design meets the minimum stability requirement for the new and overall slope. Permanent soil stabilization measures may be required.

All proposed soil cut slopes shall be 2:1 (H:V) or flatter, unless the slopes are designed with adequate reinforcement to provide the required stability. If steeper than 2:1 (H:V), all reinforced cut slopes, rock cuts and fill slopes may only be used if detailed design calculations and a slope stability analysis are submitted to the NCDOT Geotechnical Engineering Unit, via the Transportation Program Management Director, for review and acceptance prior to construction. Design and construct bridge approach embankments such that no more than ½ inch of settlement shall occur after the waiting periods end or embankment fill is constructed to subgrade elevation. Soil improvement techniques to mitigate long term settlement problems or to transfer the embankment load to a deeper bearing stratum are allowed. Soil improvement techniques shall follow the current industry standard practices and the guidelines of *Ground Improvement Methods FHWA publication NHI-04-001 or Geosynthetic Design and Construction Guidelines FHWA-HI-95-038.*

Embankment settlement monitoring shall be required when a waiting period of more than one month is recommended in the foundation design recommendation reports. Settlement monitoring of approach fills is required when their heights exceed 15% of total fill height. Approach fill height is defined as difference between proposed grade and bottom of cap elevations. Use an appropriate method to monitor settlement across the length of the embankment (from toe to toe) such as settlement gauges, surveyed stakes on finished subgrade or other methods but submit documentation describing the method and procedures to the NCDOT Geotechnical Engineering Unit, via the

Transportation Program Management Director, for review and acceptance prior to construction of the embankment.

Reinforced bridge approach fills in accordance with the NCDOT standard shall be required for end bents on all bridges.

Mitigate all unsuitable soils to the extent that is required to improve the stability of the proposed embankment or subgrade. Use any suitable material to backfill undercut areas except when employing shallow undercut in accordance with the Section 505 of the 2012 *Standard Specifications for Roads and Structures* which requires the use of Select Material, Class IV. For undercut backfilling in water, use Select Material, Class III.

3. Permanent Retaining Wall Structures

Extensible reinforcement may be allowed for any permanent retaining walls in non-critical wall structures. Modular block walls shall not be allowed for critical wall structures. Critical wall structures include walls supporting or adjacent to interstate highways, bridge abutments, wing walls and walls over 25 feet in height.

For design and construction of mechanically stabilized earth (MSE) retaining walls, refer to the NCDOT *Policy for Mechanically Stabilized Earth Retaining Walls* which can be found at the NCDOT Geotechnical Engineering Unit's website at:

www.ncdot.org/doh/preconstruct/highway/geotech/msewalls/10-07-19_ MSE_Retaining_Walls_Policy.pdf

Design and construct permanent retaining walls, with the exception of gravity walls, in accordance with the applicable NCDOT Geotechnical Engineering Unit *Project Special Provisions,* which can be provided upon request by the Design-Build Team. Geotechnical Provisions and Notes can be found at the NCDOT Geotechnical Engineering Unit's website at:

www.ncdot.org/doh/preconstruct/highway/geotech/provnote/

For each retaining wall, with the exception of gravity walls, submit a wall layout and design. The wall layout submittal shall include the following:

- Wall envelope with top of wall, bottom of wall, existing ground and finished grade elevations at incremental stations.
- Wall alignment with stations and offsets.
- Typical sections showing top and bottom of wall, drainage, embedment, slopes, barriers, fences, etc.
- Calculations for bearing capacity, global stability and settlement.
- Details of conflicts with utilities and drainage structures.
- Roadway plan sheets showing the wall (half size).
- Roadway cross sections showing the wall (half size).
- Traffic control plans showing the wall (half size).

Gravity walls shall be designed and constructed in accordance with the NCDOT Geotechnical Standard Drawings and the 2012 *Standard Specifications for Roads and Structures*. Gravity walls shall be identified in the roadway foundation design recommendation report. Cast-in-place cantilever walls shall be designed and constructed in accordance with the 2012 *Standard Specifications for Roads and Structures.* Conceptual wall layouts and wall designs shall be submitted to NCDOT for review and acceptance.

Locate retaining walls at toes of slopes unless restricted by right of way limits. The Design-Build Team shall submit global stability calculations for slopes at retaining walls and obtain acceptance from the NCDOT prior to construction. Any slopes behind walls shall be 2:1 (H:V) or flatter.

Drainage over the top of retaining walls shall not be allowed. Sags in the top of walls are not permissible. Direct runoff above and below walls away from walls, if possible, or collect runoff at the walls and transmit it away. Curb and gutter or cast-in-place single faced barrier with paving up to the wall shall be required when runoff can not be directed away from the back or front of the wall. A paved concrete ditch with a minimum depth of six inches shall be required at the top of walls when slopes steeper than 6:1 (H:V) intersect the back of walls.

Precast or cast-in-place coping shall be required for walls without a cast-in-place face with the exception of when a barrier is integrated into the top of the wall. Extend coping or cast-in-place face a minimum of six inches above where the finished or existing grade intersects the back of the wall. A fence shall be required on top of the facing, coping or barrier or immediately behind the wall, if there is no slope behind the wall. Submit fence type and details for NCTA review and acceptance. (Reference the Aesthetic Design Scope of Work.)

Deep foundations shall be used for end bents when abutment retaining walls are employed. When using abutment retaining walls, design and construct the end bent and the wall independent of each other. When using abutment retaining walls, the end bent foundation shall be designed and constructed with one of the following deep foundations: (1) a single row of plumb piles with brace piles battered toward the wall, (2) a single row of plumb piles with MSE reinforcement connected to the back of the cap, (3) a double row of plumb piles or (4) integral abutment with a single row of plumb piles and no reinforcement connected to the back of the cap in accordance with FHWA GEC 11 pages 6-8 through 6-10, or (5) drilled piers. If fill is required around piles or drilled piers, install foundations before placing any fill. Wing walls independent of abutment retaining walls shall be required unless accepted otherwise by the NCDOT. Do not consider lateral support from any fill placed around drilled piers behind abutment retaining walls when analyzing end bent stability. All pile foundations for end bents with abutment retaining walls shall penetrate minimum 10 feet into natural ground. For bearing piles behind such retaining walls, the penetration can be reduced to 5 feet below the bottom of the wall provided the Design-Build Team analyzes and determines that the vertical piles are “fixed” in natural ground such that the decrease in pile embedment shall not significantly increase the top

deflection under lateral loading. The calculations and supporting documentation for this analysis shall be submitted to the NCDOT for review and acceptance prior to construction.

4. Temporary Structures

Design temporary retaining structures and walls, which include earth retaining structures and cofferdams, in accordance with current allowable stress design AASHTO *Guide Design Specifications for Bridge Temporary Works* and the *Temporary Shoring* and *Temporary Soil Nail Walls* Special Provisions.

Traffic Control barrier on top of walls shall be in accordance with the NCDOT Work Zone Traffic Control Unit details available upon request by the Design-Build Team. If anchored barrier is required, then anchor the barrier in accordance with 2012 *NCDOT Roadway Standard Drawing* No. 1170.01.

(C) CONSTRUCTION REQUIREMENTS

All construction and materials shall be in accordance with the 2012 *Standard Specifications for Roads and Structures* and current NCDOT *Project Special Provisions* unless otherwise stated in this scope of work. The Design-Build Team shall be responsible for investigating, proposing and incorporating remedial measures for any construction problems related to foundations, retaining walls, subgrades, settlement, slopes, and construction vibrations. The NCDOT Geotechnical Engineering Unit shall review and accept these proposals.

The Design-Build Team shall be responsible for any damage or claim caused by construction, including damage caused by vibration (see 2012 *Standard Specifications for Roads and Structures* Article 107-14). The Design-Build Team shall reference 2012 *Standard Specifications for Roads and Structures* Section 220 for blasting and the Rock Blasting Project Special Provision. The Design-Build Team shall be responsible for deciding what, if any, pre and post-construction monitoring and inventories need to be conducted to satisfy their liability concerns. Any monitoring and inventory work shall be performed by a qualified private engineering firm experienced in the effects of construction on existing structures.

The prequalified geotechnical firm that prepared the foundation designs shall review the settlement monitoring data a minimum of once a month and issue a letter prior to releasing the embankment or approach fill from the waiting period. Waiting periods may not be ended until less than 0.10 inch of settlement is measured over a period of four weeks. Submit the settlement monitoring data to the NCTA prior to issuing the release letter.

The prequalified geotechnical firm that prepared the foundation designs shall review and approve all pile driving hammers and drilled pier construction sequences. After the prequalified geotechnical firm has approved these submittals, the Design-Build Team shall submit to the NCTA for review prior to beginning construction.

Perform hammer approvals with GRLWEAP Version 2002 or later and in accordance with the NCDOT LRFD *Driven Pile Foundation Design Policy*. Provide pile driving inspection charts or tables for all approved pile hammers.

Limit driving stresses in accordance with the AASHTO LRFD *Bridge Design Specifications*. If a tip elevation is noted on the plans, drive piles to the minimum required driving resistance and tip elevation.

The minimum required driving resistance is equal to the factored resistance noted on the plans divided by a resistance factor plus any additional resistance for downdrag and scour if applicable. When performing PDA testing in accordance with the AASHTO LRFD Bridge Design Specifications, the resistance factor is 0.75. Otherwise, the resistance factor for the wave equation analysis is 0.60.

Otherwise, drive piles to the minimum required driving resistance and a penetration into natural ground of at least 10 ft. Unless otherwise approved, stop driving piles when refusal is reached. Refusal is defined as 240 blows per foot or any equivalent set.

Perform Pile Driving Analyzer (PDA) testing using a NCDOT prequalified company to develop pile driving inspection charts or tables. For each permanent bridge that includes driven pile bents or driven pile footings, perform a minimum of one (1) PDA test (dual bridges are counted as one structure) for each pile size, pile type (material or shape) and pile driving hammer combination. Additional PDA tests may be required based upon the AASHTO *LFRD Bridge Design Specifications*. If the bridge length with driven pile foundations is longer than 400 feet, perform an additional PDA test at every 400 feet interval. Provide additional PDA testing for any revisions to pile type, size or hammer previously approved. The locations of specific piles to be tested must be accepted by the NCDOT prior to any PDA test. Perform PDA tests in accordance with ASTM D 4945-89, Standard Test Method for High Strain Dynamic Testing of Piles and this scope of work.

Analyze data with the Case Pile Wave Analysis Program (CAPWAP), version 2006 or later. At a minimum, analysis is required for a hammer blow near the end of initial drive and for each restrike and redrive. Additional CAPWAP analysis may be required as determined by the Engineer.

Meet the guidelines for NCDOT PDA reports from the Geotechnical Engineering Testing Contract for PDA test reports. To obtain a list of pre-approved Geotechnical Engineering Testing Contract companies to perform PDA testing and guidelines for PDA test report, contact the Geotechnical Engineering Unit at 919-250-4088. PDA testing may be performed by a technician, but PDA testing must be overseen and the reports sealed by a Professional Engineer registered in the State of North Carolina. Submit a complete PDA report sealed by the professional engineer who performed the test to the foundation design firm. The foundation design firm shall develop pile driving inspection charts or tables for acceptance by the NCDOT prior to pile installation.

For drilled-in piles, the following additional requirements apply:

1. Prequalification of contractors is not required for pile excavation or drilled-in pile holes that are 30 inches in diameter or less.

2. Use Class A Concrete in accordance with Article 1000-4 of the 2012 *Standard Specifications for Roads and Structures* except as modified herein. Provide concrete with a slump of 6 to 8 inches. Use an approved high-range water reducer to achieve this slump. Perform pile excavation to specified elevations shown on the plans. Excavate holes with diameters that will result in at least 3 inches of clearance all around piles. Before filling holes, support and center piles in excavations and when noted on the plans, drive piles to the required driving resistance. Remove any fluid from excavations and fill holes with concrete.

3. Blasting for core removal is only permitted when approved by the Engineer. Dispose of drilling spoils in accordance with Section 802 of the 2012 *Standard Specifications for Roads and Structures* and as directed by the Engineer. Drilling spoils consist of all excavated materials including fluids removed from excavations by pumps or drilling tools. If unstable, caving or sloughing soils are anticipated or encountered, stabilize excavations with either slurry or steel casing. When using slurry, submit slurry details including product information, manufacturer's recommendations for use, slurry equipment details and written approval from the slurry supplier that the mixing water is acceptable before beginning drilling. When using steel casing, use either the sectional type or one continuous corrugated or non-corrugated piece. Steel casings should consist of clean watertight steel of ample strength to withstand handling and driving stresses and the pressures imposed by concrete, earth and backfill. Use steel casings with an outside diameter equal to the hole size and a minimum wall thickness of ¼ inch.

4. Check the water inflow rate at the bottom of holes after all pumps have been removed. If the inflow rate is less than 6 inches per half hour, remove any fluid and free fall concrete into excavations. Ensure that concrete flows completely around piles. If the water inflow rate is greater than 6 inches per half hour, propose and obtain acceptance of a procedure for placing concrete before filling holes. Place concrete in a continuous manner and remove all casings.

Use current NCDOT inspection forms for drilled piers available on the NCDOT Geotechnical Engineering Unit's webpage. Construct and inspect drilled piers in accordance with Section 411 of the 2012 *Standard Specifications for Roads and Structures*. The Design-Build Team shall inspect drilled piers using their Shaft Inspection Device (SID) for any pours using the wet method of concrete placement and for any drilled pier excavations that have remained open greater than 24 hours. Install Crosshole Sonic Logging (CSL) tubes in all drilled piers. CSL test a minimum of 25% of drilled piers at each bridge or one per bent, whichever is greater. If a CSL test identifies any defect in the drilled pier, the Department has the right to request additional CSL testing as needed. The Department will determine which piers will be CSL tested. Submit CSL test information

and results to the Geotechnical Engineering Unit, via the NCTA, for review and acceptance.

The prequalified geotechnical firm that prepared the original design shall perform any changes to the foundation designs. All changes shall be based upon additional information, subsurface investigation and / or testing. Drilled pier tip elevations shall not be changed during construction unless the prequalified geotechnical firm that prepared the bridge foundation design redesigns the drilled pier from either an SPT / rock core boring, performed in accordance with ASTM standards at the subject pier location, or observations of the drilled pier excavation. If a drilled pier is designed based on a boring, do not drill a boring inside an open drilled pier excavation. Locate the boring within three pier diameters of the center of the subject pier and drill to a depth of two pier diameters below the revised tip elevation. If a drilled pier is redesigned based upon observations of the drilled pier excavation, the geotechnical engineer of record shall be present during the excavation to determine the actual subsurface conditions. Send copies of revised designs including additional subsurface information, calculations and any other supporting documentation sealed by a professional engineer registered in the State of North Carolina to the NCTA for review.

Conduct proofrolling in accordance with Section 260 of the 2012 *Standard Specifications for Roads and Structures.*

Send copies of any inspection forms related to foundations, settlement or retaining walls to the NCDOT for review.

TRAFFIC MANAGEMENT SCOPE OF WORK (10-10-11)

I. Traffic Management Plans

A. Design Parameters

The Design-Build Team shall prepare the Traffic Management Plans which includes the Temporary Traffic Control Plan, the Traffic Operations Plan, the Congestion and Incident Management Plan, the Public Information Plan as it relates to the Traffic Control Devices, and temporary pavement markings for this project following the parameters listed below:

1. For additional information regarding the components of the Traffic Management Plan, review the Work Zone Safety and Mobility Policy found on the Work Zone Traffic Control Website at:

   www.ncdot.gov/doh/preconstruct/wztc/

2. Maintain the same number of existing traffic lanes using a minimum 11 foot wide lane on all roadways, except when lane/road closures are permitted during construction operations as permitted by time restrictions noted elsewhere in this Scope of Work. Under structures only, maintain a minimum 1 foot wide paved shoulder.

   Maintain existing lane and shoulder widths on all two-lane roadways.

   Maintain 4 foot wide paved inside and outside shoulder on I-485 unless temporary barrier is placed on the paved shoulder.

3. All traffic control devices shall be placed / located a minimum 2 foot offset (shy distance) from the edge of travel lane.

4. Show temporary barrier system on the Traffic Management Staging Concept. Temporary barrier systems shall be designed in accordance with the following requirements:

   - Perform an Engineering Study to determine the need for temporary barrier that considers clear zone distances, roadway geometry, anticipated construction year traffic volumes, traffic speeds, roadside geometry, workers safety, pedestrian safety, etc. in accordance with FHWA Final Rule on Temporary Traffic Control Devices (23 CFR 630 Subpart K). Reference the NCDOT Work Zone Traffic Control website noted below for examples and Guidelines on the use of positive protection in work zones.

     http://ncdot.org/doh/preconstruct/wztc/DesRes/English/DesResEng.html

   - The Design-Build Team shall determine, and adhere to, the length of need, flare rate, clear zone and possible deflection of the proposed temporary barrier system in accordance with NCHRP-350 deflections from crash testing.

- The Design-Build Team shall not place temporary barrier systems utilized for traffic control on unpaved surfaces.

5. The design speed for temporary alignments of NC, US and Interstate routes shall not be lower than the current posted speed limit.

6. The lowest allowable design speed for temporary alignments on secondary roads shall be the higher of 10 mph below the posted speed limit or 35 mph.

7. Roadway Standard Drawing 1101.11 shall be used for calculating the length of temporary merge and shift tapers on existing roadways only. All other temporary alignments shall adhere to the *NCDOT Roadway Design Manual*, 2004 AASHTO *A Policy on Geometric Design of Highways and Streets* and the most current *Highway Capacity Manual*.

   Changes in super elevations should be avoided in the travel lane and shall not exceed 0.04 between edge lines of any direction of travel.

8. Maintain access to all residences, schools, emergency services and businesses at all times. If multiple access points exist, prior approval from NCTA and the property owner will be required prior to closing any access point.

9. Traffic traveling in the same direction shall not be split, excluding collector distributors (i.e. separation by any type of barrier, bridge piers, existing median, etc.).

10. The Design-Build Team shall identify all off-site detours and their duration within the Technical Proposal. The Design Build Team shall not place I-485 traffic on an offsite detour. Offsite detours will be allowed on other roads as described elsewhere in this Scope of Work. Prior to incorporation, obtain written approval from the Engineer for all road closures.

11. Prior to incorporation, all offsite detour routes shall be approved in writing by the Engineer and adhere to the following requirements:

    - All detour routes shall be investigated, including but not limited to, analyzing traffic capacity, investigating impacts to emergency services and schools, analyzing design characteristics to ensure the design supports the traffic volumes, and investigating pavement structural adequacy.
    - Unless otherwise approved, the Design-Build Team shall provide improvements to the detour routes to the extent that they are comparable to the existing facility being closed. At a minimum, new pavement markings and raised reflective markers shall be required.
    - Offsite detours that have non-signalized at-grade railroad crossings shall not be allowed.
    - The Design-Build Team shall minimize the requests for offsite detours. All proposed offsite detours shall be included in the Technical Proposal, providing

justification for using such detours along with duration. Possible detour warrants could include, but are not limited to, road closures due to substandard horizontal or vertical clearance limits, grade changes at tie-in locations and oversize and / or overweight limits.

- Submit the detour route and all associated sign designs for review and acceptance prior to incorporation.

12. On all roadways within the project limits, the Design-Build Team shall provide safe access for wide-loads and oversized permitted vehicles through the work zone. Safe access shall entail, but is not limited to, a sufficient pavement structure (Reference the Pavement Management Scope of Work found elsewhere in this RFP) and required minimum clear zone widths as follows:

Roadway	Minimum Clear Width
I-485	20 feet
All roadways, including ramps and loops	18 feet

13. The Design-Build Team shall utilize Changeable Message Signs (CMS) as follows:
    - Provide a minimum of four (4) CMS's and operate when needed to display pertinent traffic information relevant to work zone conditions (i.e. road closures, traffic detours, public information, traffic management, access management etc). The location of these CMS's will be determined by the operations requiring the advance warning. These CMS's shall be in addition to any other devices provided by the Department and operated by the Traffic Management Center (TMC). The Design-Build Team shall coordinate with the TMC if and when alternate route or detour information needs to be displayed.
        - All CMSs shall have the functionality to be controlled remotely by the TMC and operated in the field by the Design-Build Team
        - For Alternate and/or detour routes, CMS locations and CMS messages shall be reviewed and approved by the NCTA prior to incorporation
    - These CMSs shall be in addition to any other CMSs required by the Roadway Standard Drawings.
    - The Design-Build Team shall show approximate CMS locations, along with the respective messages that have been coordinated with the TMC, in the Traffic Management Plans.

14. The Design-Build Team shall provide a smooth pavement surface for traffic at all times.

15. The toll facility shall not be open to traffic until the project is substantially complete and toll equipment is operational. During construction, the toll facility shall not be used for temporary offsite detours.

16. The Design-Build Team shall take steps to minimize disruptions to existing roadway facilities during construction and shall demonstrate how the design, traffic control phasing and construction minimizes the inconvenience to the motorist on these facilities.

17. For all areas affected by construction, the Design-Build Team shall develop and submit to the Engineer for approval a Congestion and Incident Management Plan. The plan shall include coordination with emergency response providers such as law enforcement, fire, and EMS services. This plan shall also include project contact information, potential detour routes, towing services, and other associated information.

18. The Design-Build Team shall investigate pedestrian facilities and maintain / or provide accommodations for pedestrian traffic during construction.

B. Traffic Management Plan Requirements

The Design-Build Team shall select a Private Engineering Firm (PEF) that has experience designing and sealing Traffic Management Plans for the North Carolina Department of Transportation (NCDOT) on comparable projects. The Design Build Team shall list projects in the Technical Proposal including a description and similarity to the subject project that the Traffic Management Designer developed.

The Design-Build Team shall develop Traffic Management Plans that maintain all types of traffic (motorists, bicyclists, and pedestrians within the highway, including persons with disabilities in accordance with the Americans with Disabilities Act of 1990 (ADA), Title II, Paragraph 35.130) as defined by the *Manual for Uniform Traffic Control Devices (MUTCD).*

The Traffic Management Plans shall adhere to the "Design-Build Submittal Guidelines" and the "Guidelines for Preparation of Traffic Control and Pavement Marking Plans for Design-Build Projects", which by reference are incorporated herein and are a part of the contract. These documents are available on the Design-Build website.

The Work Zone Traffic Control web site contains useful information that may be needed for the design of the Traffic Management Plans and Pavement Marking Plans.

www.ncdot.org/doh/preconstruct/wztc/

The Staging Concept shall meet the Contract requirements before the first phase submittal can be submitted. Construction shall not begin until the first phase submittal meets the requirements of the contract. Construction shall not begin on subsequent phase submittals until they meet the requirements of the Contract. Any changes to the staging concept after it has been reviewed will require a submittal for review prior to any future phasing submittals can be submitted. All submittals shall follow the 2012 *NCDOT Roadway Standard Drawings*, 2012 *Standard Specifications for Roads and Structures*, the "*Guidelines for Preparation of Traffic Control and Pavement Marking Plans for Design-Build Projects*", *Manual for Uniform Traffic Control Devices*, and the "*Design-Build Submittal Guidelines*".

II. Project Operations Requirements

The following are Time Restrictions and notes that shall be included with the Traffic Management Plans General Notes, unless noted otherwise elsewhere in this RFP:

A. Time Restrictions

1. **Intermediate Contract Time #1 for Lane Narrowing, Closure, Holiday and Special Event Restrictions**

As a minimum, the Design-Build Team shall maintain existing traffic patterns and shall not close or narrow a lane during the times below. When traffic is placed into the final pattern for any roadway, that will become the minimal traffic pattern and the following time restrictions shall still apply.

Road Name	Time Restrictions	
I-485 (1 lane closed)	Monday -Friday	7:00 a.m. to 7:00 p.m.
I-485 (2 lanes closed)	Monday - Sunday	5:00 a.m. to 11:00 p.m.
NC 274 (Union Road)	Monday - Friday	7:00 a.m. to 9:00 a.m. 4:00 p.m. to 6:00 p.m.

The Design-Build Team shall not install, reset, and / or remove any traffic control device during the times listed above.

In addition to the lane narrowing and closure restrictions stated above for all roads, during holidays, holiday weekends, special events, or any other time when traffic is unusually heavy on the roadways listed herein as directed by the Engineer, the Design-Build Team shall not close or narrow a lane of traffic, detain the traffic flow or alter the traffic flow on the aforementioned facilities. As a minimum, these requirements / restrictions apply to the following schedules:

(a) For New Year's between the hours of 6:00 a.m. December 31st to 8:00 p.m. January 3rd. If New Year's Day is on a Friday, Saturday, Sunday or Monday then until 8:00 p.m. the following Tuesday.

(b) For Easter, between the hours of 6:00 a.m. the Friday before Easter and 8:00 p.m. the Tuesday after Easter.

(c) For Memorial Day, between the hours of 6:00 a.m. the Friday before Memorial Day to 8:00 p.m. the Wednesday after Memorial Day.

(d) For Independence Day, between the hours of 6:00 a.m. July 3rd and 8:00 p.m. July 6th. If Independence Day is on a Friday, Saturday or Sunday, between the hours of 6:00 a.m. the Thursday before Independence Day and 8:00 p.m. the Tuesday after Independence Day.

(e) For Labor Day, between the hours of 6:00 a.m. the Friday before Labor Day to 8:00 p.m. the Wednesday after Labor Day.

(f) For Thanksgiving, between the hours of 6:00 a.m. the Tuesday before Thanksgiving to 8:00 p.m. the Tuesday of the following week.

(g) For Christmas, between the hours of 6:00 a.m. the Friday before the week of Christmas Day and 8:00 p.m. the following Tuesday after the week of Christmas Day.

(h) For any NASCAR event at the Charlotte Motor Speedway, between the hours of 6:00 a.m., the Wednesday before the 1st track event, until 8:00 p.m. the day after the last track event.

(i) Carolina Panthers home games

(j) Major Events at the Airport

Liquidated Damages for Intermediate Contract Time #1 for the above lane narrowing, lane closure, holiday and special event time restrictions for I-485, including ramps/loops are $5,000 per 30 minute period or any portion thereof.

2. **Intermediate Contract Time #2 and #3 for Road Closure Restrictions for Construction Operations.**

As a minimum, the Design-Build Team shall maintain the existing traffic pattern for all roadways and follow the road closure restrictions listed below. When a road closure is used, the Design-Build Team shall reopen the travel lanes by the end of the road closure duration to allow the traffic queue to deplete before re-closing the roadway.

The Design-Build Team shall not close any direction of travel for the following roads during the times noted below. Closure of these roads or any ramps shall only be allowed for the operations listed in this intermediate contract time restriction.

Road Name	Time Restrictions	
I-485 & Ramps and Loops	Monday – Sunday	5:00 a.m. to 11:00 p.m.
Other -Y- Lines	Monday – Friday	6:00 a.m. to 7:00pm.

Maximum road closure duration of **30 minutes** shall be allowed for the roadways listed in this ICT for the following operations:

- Traffic shifts to complete tie-in work and placement of pavement markings and markers
- Installation of overhead sign assemblies and / or work on existing overhead sign assemblies over travel lanes
- Signal pole installation and cable installation required across travel lanes
- Drainage construction that cannot be accomplished utilizing a lane closure and/or flagging operation
- Placement of bridge girders

Offsite detours will be allowed for the -Y- lines specifically listed in Design Parameter #10 for the sole purpose of girder installation or drainage construction that cannot be accomplished utilizing a lane closure and / or flagging operation. Time restrictions still apply; however, the 30 minute maximum duration does not apply when approve offsite detour is in use.

During an approved offsite detour for roads other than those specifically listed in Design Parameter #10, the day and time restrictions do not apply. The duration of the road closure, listed in the Technical Proposal, will be used to determine the date and time the road will be reopened. This date and time will be used to access liquidated damages according to ICT #4.

Proposed road closures for any road within the project limits shall be approved by the Engineer prior to incorporation in the Traffic Management Plans.

Liquidated Damages for Intermediate Contract Time #2 for the above road closure time restrictions for I-485 including ramps/loops is $2500.00 per 15 minute period or any portion thereof.

Liquidated Damages for Intermediate Contract Time #3 for the above road closure time restrictions for -Y- Lines is $250.00 per 15 minute period or any portion thereof.

3. **Hauling Restrictions**

The Design-Build Team shall adhere to the hauling restrictions noted in the 2012 *Standard Specifications for Roads and Structures*.

The Design-Build Team shall conduct all hauling operations as follows:

- The Design-Build Team shall not haul against the flow of traffic of an open travelway unless an approved temporary traffic barrier or guardrail protects the work area.
- The Design-Build Team shall not haul during the holiday and special events time restrictions listed in Intermediate Contract Time #1.
- Haul vehicles shall enter or exit an open travel lane of a partial or full control of access facility at a speed equal to or greater than 10 mph below the posted speed limit.
- All entrances and exits for hauling to and from the work zone shall follow the Roadway Standard Drawing.
- Roads used as hauling access points to the project shall be limited to locations chosen by the Design-Build Team and approved by the Department. Hauling entrances, exits and crossing shall be shown on the Transportation Management Plan.

The Design-Build Team shall address how hauling will be conducted in the Technical Proposal, including but not limited to, hauling of materials to and from the site and hauling of materials within NCDOT right of way. In addition, the Design-Build Team

shall identify within their Technical Proposal any pavement improvements anticipated to existing facilities to accommodate hauling.

The Design Build Team shall monitor peak periods during construction and minimize hauling during these times beyond the times listed above.

B. Lane and Shoulder Closure Requirements

The Design-Build Team shall not install more than 1 mile of lane closures on any roadway within the project limits or in conjunction with this project, measured from the beginning of the merge taper to the end of the lane closure.

On all roads, the Design-Build Team shall not install more than one lane closure in any one direction.

The Design-Build Team shall remove lane closure devices from the lane when work is not being performed behind the lane closure or when a lane closure is no longer needed.

When personnel and / or equipment are working within 15 feet of an open travel lane, the Design-Build Team shall close the nearest open shoulder using 2012 NCDOT *Roadway Standard Drawing* No. 1101.04, unless the work area is protected by an approved temporary traffic barrier or guardrail.

When personnel and / or equipment are working on the shoulder adjacent to an undivided facility and within 5 feet of an open travel lane, the Design-Build Team shall close the nearest open travel lane using 2012 NCDOT *Roadway Standard Drawing* No. 1101.02, unless the work area is protected by an approved temporary traffic barrier or guardrail.

When personnel and / or equipment are working on the shoulder adjacent to a divided facility and within 10 feet of an open travel lane, the Design-Build Team shall close the nearest open travel lane using 2012 NCDOT *Roadway Standard Drawing* No. 1101.02, unless the work area is protected by an approved temporary traffic barrier or guardrail.

When personnel and / or equipment are working within a lane of travel of an undivided or divided facility, the Design-Build Team shall close the lane using the appropriate roadway standard drawing from the 2012 NCDOT *Roadway Standard Drawings.* The Design-Build Team shall conduct the work so that all personnel and / or equipment remain within the closed travel lane.

The Design-Build Team shall not perform work involving heavy equipment within 15 feet of the edge of travelway when work is being performed behind a lane closure on the opposite side of the travelway.

C. Pavement Edge Drop off Requirements

The Design-Build Team shall backfill at a 6:1 slope up to the edge and elevation of the existing pavement and / or use proper traffic control setup to protect traffic from the drop off as follows:

- Elevation differences that exceed 2 inches on roadways with posted speed limits of 45 mph or greater and a paved shoulder four-foot wide or less.
- Elevation differences greater than 3 inches on roadways with posted speed limits less than 45 mph and with a paved shoulder four-foot wide or less.
- Refer to the *2002 AASHTO Roadside Design Guide* for proper treatment of all other conditions.

Do not exceed a difference of 2 inches in elevation between open lanes of traffic for nominal lifts of 1.5 inches. Install advance warning "UNEVEN LANES" signs (W8-11) 500 feet in advance and a minimum of every half mile throughout the uneven area.

D. Traffic Pattern Alterations

The Design-Build Team shall notify the Engineer in writing at least twenty-one (21) calendar days prior to any traffic pattern alteration. (Reference the Public Information Scope of Work)

E. Signing

The Design-Build Team shall install advance work zone warning signs when work is within 100 feet from the edge of travel lane and no more than three days prior to the beginning of construction.

When no work is being conducted for a period longer than one week, the Design-Build Team shall remove or cover all advance work zone warning signs, as directed by the Engineer. Stationary work zone warning signs shall be covered with an opaque material that prevents reading of the sign at night by a driver traveling in either direction.

When portable signs not in use for periods longer than 30 minutes, the Design-Build Team shall lay the portable work zone sign flat on the ground and collapse the sign stand and lay it flat on the ground.

The Design-Build Team shall be responsible for the installation and maintenance of all detour signing. The Design-Build Team shall cover or remove all detour signs within and off the project limits when a detour is not in operation.

The Design-Build Team shall ensure proper signing (including but not limited to guide signs) are in place at all times during construction, as required by the *MUTCD*.

F. Traffic Barrier

The Design-Build Team shall use only an NCDOT approved temporary traffic barrier system and adhere to the following requirements.

Install temporary traffic barrier system a maximum of two (2) weeks prior to beginning work in any location. Once the temporary traffic barrier system is installed at any location, proceed in a continuous manner to complete the proposed work in that location.

Once the temporary traffic barrier system is installed and no work has been or will be performed behind the temporary traffic barrier system for a period longer than two (2) months, remove / reset the temporary traffic barrier system unless the barrier is protecting traffic from a hazard.

Protect the approach end of temporary traffic barrier system at all times during the installation and removal of the barrier by either a truck mounted impact attenuator (maximum 72 hours) or a temporary crash cushion.

Protect the approach end of temporary traffic barrier system from oncoming traffic at all times by a temporary crash cushion unless the approach end of temporary traffic barrier system is offset from oncoming traffic as follows:

Posted speed limit (MPH)	Minimum offset (feet)
40 or less	15
45 - 50	20
55	25
60 mph or higher	30

Install temporary traffic barrier system with the traffic flow, beginning with the upstream side of traffic. Remove the temporary traffic barrier system against the traffic flow, beginning with the downstream side of traffic.

Install drums to close or keep closed tangent sections of the roadway until the temporary traffic barrier system can be placed or after the temporary barrier system has been removed. The distance, in feet, between drums shall be no greater than twice the posted speed limit (MPH).

At acceleration ramps / loops, install temporary traffic barrier system in a manner that provides a minimum of 200 feet from the end of the pavement marking taper to the beginning of the barrier taper.

The Design-Build Team shall be responsible for providing proper connection between the existing bridge rails and temporary barrier systems and include this information in the appropriate plans.

G. Traffic Control Devices

The Design-Build Team shall use traffic control devices that conform to all NCDOT requirements and are listed on the NCDOT Approved Products List. The Approved Products List is shown on NCDOT Work Zone Traffic Control website at:

www.ncdot.org/doh/preconstruct/wztc/

The use of any devices that are not shown on the Approved Product List shall require written approval from the Transportation Management Director.

In tangent sections, channelizing device spacing shall not exceed a distance in feet equal to twice the posted speed limit. At intersections and driveway radii, channelization devices shall be spaced 10 feet on-center and 3 feet off the edge of an open travelway, when lane closures are not in effect. Skinny drums shall only be allowed as defined in Section 1180 of the 2012 *Standard Specifications for Roads and Structures*.

Place Type III barricades, with "ROAD CLOSED" signs (R11-2) attached, of sufficient length to close entire roadway. Stagger or overlap barricades to allow for ingress or egress.

When a CMS is placed within the clear zone, provide proper delineation and protection for the traveling public.

Place sets of three drums perpendicular to the edge of the travelway on 500-foot centers when unopened lanes are closed to traffic. These drums shall be in addition to channelizing devices.

H. Temporary Pavement Markings, Markers and Delineation

The Design-Build Team shall provide Temporary Pavement Markings Plans that meet the requirements of the RFP and the *Guidelines for Preparation of Traffic Control and Pavement Marking Plans for Design-Build Projects*.

The Design-Build Team shall use pavement marking and marker products that conform to all NCDOT requirements and are listed on the NCDOT Qualified Products List. The list is available at:

www.ncdot.org/doh/preconstruct/traffic/congestion/sign/

The use of any devices that are not shown on the Qualified Products List shall require approval from the Director of the Transportation Program Management Unit.

The Design-Build Team shall install pavement markings and markers in accordance with the 2012 *Standard Specifications for Roads and Structures*, and in accordance with the manufacturer's procedures and specifications.

The Design-Build Team shall install temporary pavement markings that are the same width as existing pavement marking on all roadways. For roadways that do not have existing pavement marking, install temporary pavement markings that are the same width as required in the Pavement Marking Scope of Work for the final pavement marking.

The Design-Build Team shall install temporary pavement markings and temporary pavement markers on the interim surface or temporary pattern as follows:

Road	Marking	Marker
All Roads and Existing Structures	Minimum of Paint	Raised Temporary
Proposed Structures	Cold Applied Plastic (Type IV)	Raised Temporary

The Design-Build Team may use any type of pavement markings on the NCDOT Qualified Products List for temporary pattern. However, the Design-Build Team shall maintain a minimum retroreflectivity for pavement markings on all roads (existing and temporary) at all times during construction, as follows:

- White: 125 mcd / lux / m2
- Yellow: 100 mcd / lux / m2

When using Cold Applied Plastic (Type IV) pavement markings, place temporary raised markers half on and half off edge lines and center lines to help secure the tape to the roadway. Markers shall be spaced the appropriate distance apart as described by the *2012 NCDOT Roadway Standard Drawing* 1250.01, Sheet 1 of 3.

Prior to opening a roadway to traffic on facilities that the installation of a proposed monolithic island has not occurred, outline the location of the proposed monolithic island with the proper color pavement marking and delineate the proposed monolithic island with drums.

Place at least 2 applications of paint for a temporary traffic pattern that will remain in place over three (3) months. Place additional applications of paint upon sufficient drying time, as determined by the Engineer.

Tie proposed pavement marking lines to existing pavement marking lines.

Replace any pavement markings that have been damaged by the end of each day's operation.

The Design-Build Team shall not place temporary markings on any final asphalt pavement surface unless the temporary markings are placed in the exact location of the final pavement marking.

The Design-Build Team shall remove all conflicting markings or markers prior to shifting traffic to a new pattern.

Unless noted otherwise elsewhere in this RFP, removal of the temporary pavement markings on asphalt surfaces shall be accomplished by an NCDOT approved system to minimize damage to the road surface. All temporary pavement markings on concrete pavement shall be removed by water blasting. Temporary pavement markings shall not be obliterated with any type of Black Pavement Markings (paint or other material). The

Design-Build Team shall remove 100% of all temporary pavement markings without removing more than 1/32-inch of the pavement surface.

I. Temporary Traffic Signals

Use the following notes if the Design-Build team recommends using temporary signals for maintenance of traffic:

- Notify the Engineer two months before a traffic signal installation by others is required.
- Shift and revise all signal heads as shown on the approved Design Build signal plans.

J. Miscellaneous

Provide portable temporary lighting to conduct night work in accordance with the *2012 Standard Specifications for Roads and Structures*.

Provide proper drainage for all temporary alignments and / or traffic shifts.

Law enforcement officers may be used to help protect workers and road users, and to maintain safe and efficient travel through the work zones. The Design-Build Team shall be responsible for coordinating with the law enforcement agency for the use of law enforcement officers. The Design-Build Team shall address where and why law enforcement officers will be used. The Design-Build Team shall only utilize Officers who are outfitted with law enforcement uniforms and marked vehicles, which are equipped with proper lights mounted on top of the vehicle and agency emblems.

The Department will not grant an ordinance for a $250 penalty for speeding in the work zone for this project.

The Department will not grant a speed reduction ordinance for this project.

The Design-Build Team shall be responsible for all required temporary shoring, including but not limited to providing, installing, maintaining and removing. Temporary shoring for the maintenance of traffic is defined as shoring necessary to provide lateral support to the side of an excavation or embankment parallel to an open travelway when a theoretical 2:1 (H:V) slope from the bottom of the excavation or embankment intersects the existing ground line closer than 5 feet from the edge of pavement of the open travelway. The Design-Build Team shall identify locations where temporary shoring for maintenance of traffic will be required on the Traffic Control Staging Concept. The Design-Build Team shall install temporary traffic barrier as shown on a detail available from the Work Zone Traffic Control Unit that provides design information on the temporary traffic barrier location in relation to the temporary shoring and traffic location. The following NCDOT Geotechnical Engineering Unit and Work Zone Traffic Control Section websites have more information on temporary shoring (notes related to Temporary Shoring are not required in the General Notes sheet for the Traffic Management Plan):

www.ncdot.org/doh/preconstruct/highway/geotech/formdet/2012/

www.ncdot.org/doh/preconstruct/wztc/DesRes/English/TemporaryShoring/TempShoring.pdf

The Design-Build Team shall adhere to the additional shoring requirements located on the Work Zone Traffic Control Section and Geotechnical Engineering Unit websites.

The Design-Build Team shall identify on the appropriate traffic control detail where temporary shoring will be used by providing station limits, offsets, the type of shoring and where temporary traffic barrier will be located if needed.

K. Traffic Control Supervisor

The Design-Build Team shall furnish a Traffic Control Supervisor for the project who is knowledgeable of Traffic Control Plan design, devices and application, and has full authority to ensure traffic is maintained in accordance with the plans and specifications.

The Design-Build Team shall identify a Traffic Control Supervisor in their Technical Proposal that has the following qualifications:

- A minimum 24 months of On-the-Job Training in supervision and work zone set up and implementation on similar projects.
- Be certified by responsible party (contractor or NCDOT) to have the required experience and training and is qualified to perform the duties of this position. If certified by the Contractor, a notarized certification letter shall be furnished to the Engineer at the preconstruction meeting. The letter shall state the Traffic Control Supervisor is qualified, and state that the Traffic Control Supervisor has the authority to ensure traffic is maintained in accordance with the contract documents.

The Traffic Control Supervisor for the project shall be capable of performing the following:

1. Be available and on call at all times to direct / make any necessary changes in the traffic control operations in a timely and safe manner.
2. Coordinate and cooperate with traffic control supervisors of adjacent, and overlapping construction projects, as well as construction projects in proximity to the subject project, to ensure safe and adequate traffic control setup is maintained throughout the project at all times, including periods of construction inactivity.
3. Coordinate and cooperate with Traffic Management Center personnel in Mecklenburg County to ensure proper messages are displayed on the CMSs and DMSs.
4. Provide traffic control setup that ensures safe traffic operations and workers' safety throughout the construction area.
5. Attend all scheduled traffic control coordination meetings, as required by the Engineer.
6. Monitor traffic delays and backups within the work zone. Coordinate with the TMC as required by this Scope of Work. (Reference Design Parameter #13)

PAVEMENT MARKINGS SCOPE OF WORK (11-07-11)

General

The Design-Build Team shall prepare Final Pavement Marking Plans in accordance with the 2009 Edition of the *Manual on Uniform Traffic Control Devices (MUTCD)*, the 2012 *NCDOT Roadway Standard Drawings*, "Guidelines for Preparation of Traffic Control and Pavement Marking Plans for Design-Build Projects", the "Design-Build Submittal Guidelines for North Carolina Turnpike Authority", and the contract requirements contained herein.

Final Pavement Marking Plan Requirements

The Design-Build Team shall select a Private Engineering Firm (PEF) that has experience designing and sealing Pavement Marking Plans for NCDOT on comparable projects.

The Design-Build Team shall develop Pavement Marking Plans that maintain all types of traffic (motorists, bicyclists, and pedestrians within the highway, including persons with disabilities in accordance with the Americans with Disabilities Act of 1990 (ADA), Title II, Paragraph 35.130) as defined by the *Manual for Uniform Traffic Control Devices (MUTCD).* If construction of sidewalks is part of the scope of work, curb ramps shall be shown and stationed in the plan (signalized and non-signalized intersections or points of pedestrian crossing). Curb ramps shall be constructed per current ADA standards with guidance from the Roadway Standard Drawings. If geometry of roadway does not allow for the use of the standard details provided, contact Contract Standards & Development Unit with the Department for alternative approved curb ramp designs.

Final Pavement Marking Project Limits

The Final Pavement Marking Plans shall address any required modifications to existing pavement markings located outside the project limits to ensure appropriate tie-ins. The Design-Build Team shall be responsible for installing all pavement markings and markers located within and outside the project limits, resulting from the project construction.

Pavement Markings, Markers and Delineation

The Design-Build Team shall not place any final pavement markings and markers until the Final Pavement Marking Plans are submitted for review and acceptance.

The Design-Build Team shall use pavement marking and marker products that conform to all NCDOT requirements and are listed on the NCDOT's Approved Products List. The use of any devices that are not shown on the Approved Product List shall require written approval from the Engineer.

The Design-Build Team shall install pavement markings and markers in accordance with the 2012 *Standard Specifications for Roads and Structures*, and in accordance with the manufacturer's procedures and specifications.

The Design-Build Team shall install pavement markings and pavement markers on the final surface as follows:

Road	Marking	Marker
All Asphalt Surfaces	Thermoplastic	Snowplowable (Raised on Concrete Bridge Decks) or match existing
All Concrete Surfaces	Polyurea with Highly Reflective Elements *	Snowplowable (Raised on Concrete Bridge Decks) or match existing

* Using polyurea or epoxy pavement marking material, install black contrast markings on -L-Line skips on concrete pavement in accordance with the Black-White Combination / 10' White Skip Lines / 10' Black Skip Lines Detail dated October 20, 2010. Black contrast markings may be polyurea or epoxy material. As applicable, provide epoxy pavement marking material in accordance with the Epoxy Pavement Material Project Special Provision.

If markings are placed on diamond ground surfaces, remove longitudinal grooves prior to installation.

On concrete surfaces, use Heated-in-Place Thermoplastic or Cold Applied Plastic (Type II or III) markings for stop bars, symbols, characters and diagonals.

On asphalt surfaces, use Heated-in-Place Thermoplastic or Extruded Thermoplastic markings for stop bars, symbols, characters and diagonals.

Use water blasting (hydro blasting) or grinding on concrete surfaces to remove curing compound and surface laitance prior to placing pavement marking materials.

Use 6" lane, edge and center lines on all Full Control of Access facilities.

The Design-Build Team shall tie proposed pavement marking lines to existing pavement marking lines.

The Design-Build Team shall replace any pavement markings that have been damaged by the end of each day's operation.

SIGNING SCOPE OF WORK (11-07-11)

General

The Signing Plans shall be prepared by the Design-Build Team in accordance with the latest edition of the 2009 *Manual on Uniform Traffic Control Devices (MUTCD),* the *NC Supplement to the MUTCD*, 2012 *Standard Specifications for Roads and Structures*, the 2012 *NCDOT Roadway Standard Drawings*, the latest *Standard Specifications for Structural Supports for Highway Signs, Luminaires, and Traffic Signals* published by AASHTO, "Guidelines for Preparation of Signing Plans for Design-Build Projects", "Design-Build Submittal Guidelines for North Carolina Turnpike Authority", Garden Parkway Signing Schematic dated July 29, 2011, and NCTA's latest Toll Facility Signing Requirements.

Signing Plan Requirement

The Design-Build Team shall select a Private Engineering Firm (PEF) that has experience in designing and sealing Signing Plans for NCDOT on projects comparable to this project. NCTA shall provide the Design-Build Team with the Garden Parkway Signing Schematic dated July 29, 2011 and the Toll Facility Signing Requirements for the Garden Parkway corridor for the Design-Build Team's use in developing its signing plan. The schematic represents the minimum signing required for the project and shall be used in conjunction with all applicable standards to develop the signing concept for the project. It is the responsibility of the Design-Build Team to determine all existing signs that will be affected by the project and develop any additions to the signing not shown on the schematic to meet all applicable standards.

Signing Project Limits

The Design-Build Team shall be responsible for the design, fabrication and installation of all toll road and standard signs required on I-485, NC 273, NC 274, NC 279, Dixie River Road, West Boulevard, all ramps, loops, and -Y- Lines.

The Design-Build Team shall also be responsible for the design, fabrication and installation of all signs required beyond the easternmost construction limits of the mainline, all -Y- Lines and all cul-de-sacs to ensure adequate advance signage and spacing is provided.

All signs for toll collection site AET#5 shall be the responsibility of the Design-Build Team, including signs on the adjacent project, if any.

The posted speed limit for this facility shall be 65 MPH.

Sign Design

The Design-Build Team shall responsible for the design, fabrication and installation of "Advisory Speed" signing for exit ramps as detailed in Figure 2C-3 of the *MUTCD*. Signs W13-6, W13-7 and W1-8R shall be used in lieu of W13-2, W13-3 and W1-6R. The Design-Build Team shall install the advisory speed plaque (E13-1P) below the exit gore signs for loop exit ramps.

The Design-Build Team shall be responsible for all Type A, B, and D sign designs, fabrication and installation for ground mounted signs including temporary "All Traffic Exit" signing. The Design-Build Team shall be responsible for sizing, fabricating, locating and installing all Type E (warning and regulatory signs) and Type F signs (route marker assemblies), and milemarkers.

The Design-Build Team shall design, fabricate and install milemarkers every half mile on the project. Each milemarker location shall have two milemarkers mounted back to back on one U-post on the outside shoulder for each direction of travel on the mainline. The milemarker designs shall be in accordance with the Intermediate Enhanced Reference Location Signs (D10-5) referenced in the *Standard Highway Signs (2004 Edition)* and detailed in the Garden Parkway Signing Schematic dated July 29, 2011.

All sign designs shall be included in the Signing Plans. All sign designs shall be prepared using the latest version of GuidSign software. Refer to the Signing and Delineation Unit's main website below located under Private Engineering Firm by clicking on Seed Files (guidsign_english.dgn) for the latest GuidSign updates:

www.ncdot.org/doh/preconstruct/traffic/congestion/SIGN/default.html

Electronic Toll Collection Signing

The Design-Build Team shall be responsible for the design, fabrication, and installation of all toll road signs in accordance with the Toll Facility Signing Requirements, dated August 8, 2011, provided by the NCTA. Electronic Toll Collection Signing logo pictographs, details provided by NCTA, shall be used on the ETC signs. Design of signs containing logos shall be in accordance with Chapter 2F of the *MUTCD*.

Customer Service Center Signing

The Customer Service Center location has not yet been established. The Design-Build Team shall be responsible for the design, fabrication, and installation of all Customer Service Center signs including mainline, ramp, and trailblazer signs in accordance with the Toll Facility Signing Requirements (TS-3.1) provided by the NCTA. In such case, the fabrication and installation of these signs will be paid for as Extra Work in accordance with Article 104-8(A) of the 2012 *Standard Specifications for Roads and Structures*.

Sign Maintenance

The Design-Build Team shall maintain all existing ground mounted and overhead signs that are affected by construction, including temporary installations of Guide and Logo Signs on supports, overhead assemblies, foundations, lighting systems and any other element of the sign system in accordance with Section 908-3(C) of 2012 *Standard Specifications for Roads and Structures* to ensure signs are properly maintained and visible during project construction. The Division Logo Coordinator shall be notified in writing at minimum 30 days prior to any logo sign relocation or temporarily removing the sign from service. If damage occurs to the Logo Signs or the business panels during construction or installation, notify the Division Logo Coordinator as soon as possible. The Design-Build Team shall be responsible for replacement of Logo Signs or Logo business panels should damage occurs. Logo signs to be permanently removed shall remain in

service as long as practical prior to removal. Any Logo Sign business panels that are removed from service shall be returned to the Division Logo Coordinator. The Division Logo Coordinator shall be notified in writing at minimum 90 days prior to permanent removal of any logo sign or business panel. The order of preference for Logo Signs shall be maintained during project construction (see MUTCD section 2F.02).

Temporary Signs

The Design-Build Team shall be responsible for designing, fabricating, and installing temporary signs and supports. Reference the Signing Section of the Traffic Management Scope of Work found elsewhere in this RFP for additional temporary signing requirements.

Sign Locations

The Design-Build Team shall be responsible for determining the station locations for all signs. To avoid sign placement in locations where their usefulness will be short-lived, the Design-Build Team shall coordinate the proposed sign locations with existing and future projects through NCTA and NCDOT.

Ground Mounted Supports

Unless otherwise approved by the Engineer, ground mounted signs on a freeway or expressway, with breakaway or yielding supports, shall be located a minimum of 30 feet from the edge of the outside travel lane to the nearest edge of the sign.

The Design-Build Team is responsible for all design, fabrication, and installation of ground mounted supports and signs. The latest version of the support program is located at the following website:

www.ncdot.org/doh/preconstruct/traffic/congestion/SIGN/default.html

Overhead Sign Assemblies

The Design-Build Team shall be responsible for the design, fabrication, and installation of new overhead sign assemblies for the project as identified on the Garden Parkway Signing Schematic dated July 29, 2011.

The Design-Build Team may modify existing overhead sign assemblies to accommodate proposed signs if the following conditions are met:

- Aesthetic treatments, as may be required; and
- A structural analysis is performed for any sign structure where the total area of all sign panels on the structure exceeds the original design wind load area for that structure which satisfies the Department that the existing structure can accommodate the proposed sign panels in accordance with the latest version of the latest AASHTO Standard Specifications for Structural Supports for Highway Signs, Luminaires, and Traffic Signals; or

- Demonstration that the total area of all sign panels on the structure does not exceed the original design wind load area for that structure.

The Design-Build Team shall prepare shop drawings for NCTA and the NCDOT Transportation Program Management Unit's review of all modified overhead sign structures.

The wind speed for new overhead sign assembly designs is 90 MPH. The Design-Build Team is responsible for calculating the windload area for the overhead sign assemblies. The windload area will be equal with the proposed sign panel height and width on the overhead sign assemblies. Include exit panels as part of the sign height when calculating the windload area. The coordination with future projects and sign messages shall be considered when designing and fabricating overhead sign assemblies.

Based upon the signs depicted in the Garden Parkway Signing Schematic dated July 29, 2011, the wind load area for several overhead signs is anticipated to exceed 800 square feet, which is permissible.

Overhead Sign Assemblies denoted with an asterisk on the Garden Parkway Signing Schematic dated July 29, 2011 shall be designed, fabricated and installed in accordance with the Aesthetics Design Scope of Work found elsewhere in the RFP.

The minimum vertical clearance beneath all overhead sign assemblies shall be 17 feet.

The Design-Build Team shall design, fabricate, and install overhead sign supports and foundations in accordance with the Project Special Provisions for Foundations and Anchor Rod Assemblies for Metal Poles, Overhead and Dynamic Message Sign Foundations, and Overhead Sign Supports.

The Design-Build Team shall be responsible for designing, fabricating and installing median barrier footing and median transition barrier in accordance with the 2012 *NCDOT Roadway Standard Drawing* No 854.05 for any new overhead sign assembly that will replace an existing assembly mounted on median barrier.

Monotube sign support structures shall not be allowed.

Overhead Sign Supports for Freeways

Overhead sign supports shall be located a minimum of 40 feet from the edge of the outside travel lane to the center of the sign support. If the minimum 40-foot distances cannot be obtained due to Right of Way constraints, or drainage / utility conflicts, the overhead sign supports shall be located a minimum of 22 feet from the outside travel lane and protected by guardrail or other NCDOT approved positive protection barrier.

The Design-Build Team shall provide the appropriate positive protection and drainage for all overhead sign median supports.

Overhead Sign Sheeting

The Design-Build Team shall design and fabricate overhead signs using Grade A on C retroreflective sheeting for the legends (text) and border.

The Design-Build Team shall remove and dispose of signs and lighting systems on existing overhead sign assemblies and design fabricate and install proposed overhead signs using Grade A on C retroreflective sheeting for the legends (text) and border. Refer to the Signing and Delineation Unit's main website listed below under Resource titled 'Standard Practice for Retroreflectivity Sign Sheeting:

www.ncdot.org/doh/preconstruct/traffic/congestion/SIGN/default.html

No overhead sign lighting is required for advance guide or exit directional overhead signs.

Guardrail or Other Protection for Signs and Overhead Assemblies

The Design-Build Team shall be responsible for determining, designing and installing any protection for proposed and existing sign supports.

Signing Roadway Standards, Typical Sheets and Specifications

Signing roadway standards and typical sheets to be used in summarizing quantities, standard specifications, and compiling Type E and F signs are located on the Signing and Delineation Unit's main website listed below under Private Engineering Firm by clicking on Seed Files (Engseed.dgn) for the latest standards, typical sheets and specifications:

www.ncdot.org/doh/preconstruct/traffic/congestion/SIGN/default.html

The Design-Build Team shall incorporate the appropriate information onto these sheets and submit them to NCTA for review and acceptance.

Removal and Disposal of Existing Signs

The Design-Build Team shall be responsible for determining existing signs that will no longer be needed upon completion of the project, on -Y- lines and project tie-ins. The Design-Build Team shall be responsible for removal and disposal of these signs and supports. The Design-Build Team shall show and note these signs on the signing plan view sheets.

Signing Construction Revisions

Any construction revision must be submitted to NCTA for review and acceptance prior to incorporation.

SIGNALS SCOPE OF WORK (11-07-11)

General

The Design-Build Team shall design and prepare plans for new traffic signal installations. This work shall include, but not be limited to, the preparation of Traffic Signal Plans, Electrical and Programming Details, and Project Special Provisions. These plans shall be prepared in accordance with the "Design-Build Submittal Guidelines for North Carolina Turnpike Authority" and the "Guidelines for Preparation of Traffic Signal & Intelligent Transportation System Plans on Design-Build Projects".

The Design-Build Team shall select a Private Engineering Firm (PEF) that has experience designing and sealing Signal Plans for NCDOT on comparable projects. The Technical Proposal shall list similar projects on which the PEF has developed Signal Plans within the past five (5) years. The PEF must be prequalified for Traffic Signal Design and Electrical Detail design work under the ITS & Signals Unit's normal prequalification procedure.

A pre-design meeting shall take place between the NCDOT ITS & Signals Unit, the Design-Build Team, the Division Traffic Engineer, the Regional Traffic Engineer and any other pertinent NCDOT personnel before Signal designs begin. Signal Plan submittals shall only be reviewed and accepted by NCDOT ITS & Signals Unit after this pre-design meeting has occurred.

The Design-Build Team shall coordinate and implement all signal designs at the appropriate time as directed by the Engineer. The Design-Build Team shall maintain, monitor and adjust the traffic signals as needed throughout the project. The Design-Build Team shall also be responsible for the design and implementation of all temporary signal designs needed to maintain traffic during construction. The Design-Build Team shall maintain full actuation of all traffic signals on this project until the time of final acceptance.

The Design-Build Team shall be responsible for providing a safe and economical design for the public. The Design-Build Team shall be responsible for ensuring that all plans and designs conform to the current design standards of the ITS & Signals Unit. All plans and associated design material and specifications shall be reviewed and accepted by NCDOT before installation.

The Design-Build Team shall deliver all existing cabinets and contents that are not reinstalled or reused on this project to the Division 12 Traffic Services Office located at 230 Kemper Road, Shelby, NC 28152.

Traffic signals

The Design-Build Team shall install four (4) new traffic signals. The Design-Build Team may use video detection for temporary traffic patterns during construction; however, the traffic signal detection for the final traffic patterns shall be inductive loop detection. The traffic signal work required at each intersection is listed below.

Proposed Signals (4)		
Signal Number	**Intersection Description**	**Work Requirements**
12-1787	NC 274 (Union Road) at Garden Parkway EB & WB Ramps	The Design-Build Team shall design and install a new, fully actuated traffic signal at each location listed in this table. Each design shall include a new 2070L controller in a new cabinet. The cabinet shall include an auxiliary output file. The Design-Build Team shall use Flashing Yellow Arrow signal heads at locations with protected/permissive left turns. The signals shall be fully actuated. The Design-Build Team shall use **Metal Strain Poles** as signal supports. These four traffic signals will be <u>isolated</u> (no signal system).
12-1789	NC 274 (Union Road) at NC 274 / SR 2435 (Union-New Hope Road)	
12-1788	NC 279 (South New Hope Road) at Garden Parkway WB Ramp	
10-2116	Garden Parkway WB at I-485 SB Ramp	

ENVIRONMENTAL PERMITS SCOPE OF WORK (09-20-11)

The NCTA has applied for a US Army Corps of Engineers Section 404 Permit and a NC Department of Natural Resources (NCDENR), Division of Water Quality (DWQ) Section 401 Water Quality Certification for the project corridor based on the current design plans for the project.

This permit application, provided to the short-listed Design-Build Teams, requests a final design permit for U-3321CB and a phased or preliminary permit for U-3321AA, U-3321B and U-3321CA.

General

The NCTA will not allow direct contact between the Design-Build Team and representatives of the environmental agencies either by phone, e-mail or in person, without representatives of the NCTA or the NCDOT Transportation Program Management Unit present. A representative from NCTA and the NCDOT Transportation Program Management Unit shall be included on all correspondence. The Design-Build Team should be aware that this project is subject to the Catawba River Basin Buffer Rules. The Design-Build Team shall acquire an Authorization Certificate from DWQ for impacts to riparian buffers associated with this project. The Design-Build Team shall be responsible for preparing all documents necessary for the NCTA to obtain Permit Modifications for the project. The Design-Build Team shall not begin ground-disturbing activities, including utility relocation in jurisdictional areas, until the environmental permits have been issued (this does not include permitted investigative borings covered under Nationwide Permit # 6).

The Design-Build Team may begin other utility relocation work prior to obtaining the aforementioned permits provided that (1) the NCTA is notified in writing prior to these activities; (2) such activities are outside jurisdictional resources. Upon consultation with the NCTA, a meeting will be required with the permitting agencies prior to beginning work.

NCTA is utilizing a SAFETEA-LU Section 6002 compliant Project Coordination Plan for coordinating with environmental resource and regulatory agencies on this project. This Coordination Plan specifies the project, to the extent possible, will follow an environmental review process consistent with the requirements for "Projects on New Location" as described in the Section 404/NEPA Merger 01 Process Information, with modifications as specified in the Coordination Plan. Written concurrence has been achieved for Concurrence Points 1, 2, 2A, 3, and 4A for the entire corridor. Concurrence Point 4B and 4C meetings have taken place for U-3321CB. Any substantive changes in this section of the project will require additional consultation with the resource agencies and will be the responsibility of the Design-Build Team. Concurrence Points 4B and 4C have not been completed for the other sections of the project. The Design-Build Teams will be responsible for completing the 4B and 4C process including but not limited to scheduling the appropriate meetings with the responsible agencies, preparation of the meeting materials and all relevant submittals.

Any variations to the NCTA's proposed design and/or construction methods that require additional coordination with the environmental agencies shall be the sole responsibility of the Design-Build Team. The NCTA shall not allow any contract time extensions associated with

this additional coordination. The Design-Build Team shall follow the appropriate details in the document titled "Project Coordination Plan for the Gaston East-West Connector Project" contained in Appendix A-7 of the Draft EIS as well as the document titled "Merger 01 Implementation Team – Merger 01 Process Information" which will be provided to the teams on the Reduced Candidates List.

The Design-Build Team shall provide roadway plans and permit impact sheets (half-size plans) to the NCTA and the NCDOT Director of Transportation Program Management a minimum of five weeks before the respective meetings.

The Design-Build Team shall clearly identify in their Technical Proposal what months they would like the NCTA to schedule agency coordination meetings to review the hydraulic design and permit drawings for permit modifications. Failure on the part of the Design-Build Team to meet these dates, as identified in their Technical Proposal, places all responsibility for associated delays solely on the Design-Build Team.

Unless otherwise noted in this RFP, the Design-Build Team shall be bound by the terms of all signed planning documents and approved minutes and commitments of all agency coordination meetings and shall be held accountable for meeting all permit conditions. The Design-Build Team shall be required to staff any personnel the Design-Build Team deems necessary to provide permit compliance.

The Design-Build Team shall develop and implement an Environmental and Permit Monitoring Plan. The Design-Build Team shall engage the person that prepared the project permit application, unless otherwise approved, to provide impartial environmental and permit monitoring services during each phase of construction, including but not limited to construction runoff water quality device inspections, hazardous material spill reporting and response, compliance with USACE Section 404 Permit requirements, NCDENR 401 Certifications, NCDOT NPDES Permit requirements, and notifications of archaeological discoveries. This individual shall also be responsible for coordinating, leading and preparing minutes for monthly resource agency field reviews.

The NCTA received a Notice of Jurisdictional Determination from the USACE dated August 5, 2011. Unless there is a change in the law or published regulations, this determination may be relied upon for a period not to exceed five years from the date of this notification.

Permit Modification Application Process

The Design-Build Team shall not take an iterative approach to hydraulic design issues. The hydraulic design shall be complete prior to permit modification package submittal. It shall be the Design-Build Team's responsibility to acquire information and prepare a complete permit modification package with drawings that reflect the impacts and minimization efforts, including those resulting from agency coordination, and as designed by the Design-Build Team.

Further it shall be the Design-Build Team's responsibility to provide these permit impact sheets (drawings) depicting the design and construction details to the NCTA as part of the permit modification package. The Design-Build Team shall be responsible for developing the permit

modification package for all jurisdictional impacts including those to utility relocations. The permit modification package shall consist of, at a minimum, the following:

- Cover Letter
- Minutes from the agency coordination meetings to review the hydraulic design and permit impacts
- Permit drawings
- Half-size plans

In addition to the above, the Design-Build Team shall provide an electronic package of the 401 Certification application and drawings to USACE and DWQ concurrent with the paper copies.

Direct coordination between the Design-Build Team, the NCDOT's Director of Transportation Program Management and the NCTA shall be necessary to ensure proper permit application development. Upon completion of the permit modification application package, the Design-Build Team shall concurrently forward the package to the NCTA and the NCDOT's Director of Transportation Program Management for review and approval. At the direction of the NCTA and the NCDOT's Director of Transportation Program Management, the Design-Build Team shall be responsible for the distribution of these materials to the resource and regulatory agencies.

Any temporary construction measures, including de-watering, construction access, etc. shall be addressed in the permit modification package. Impacts that result from so-called temporary measures may not be judged to be temporary impacts by the agencies. These issues must be discussed and addressed with the regulatory and resource agencies during the 4B and 4C meetings.

The Design-Build Team shall clearly indicate the location of and impacts of haul roads and utility relocations on jurisdictional areas. The Design-Build Team shall identify all proposed borrow and waste sites, although these sites shall have no impacts to jurisdictional areas. These details shall be included in the permit application data. Further, the Design-Build Team shall describe the methods of construction of all structures. The description of the temporary impacts (haul roads, utility relocations, work bridges, etc.) shall include restoration plans, schedules, and disposal plans. This information shall be included in the permit modification package. This information shall also be part of the data presented at the agency coordination meetings for hydraulic design and permit impacts review.

The NCTA hereby commits to ensuring, to the greatest extent possible, that the footprint of the impacts in areas under the jurisdiction of the federal Clean Water Act shall not be increased during the Design-Build effort and thereby expects the Design-Build Team to likewise adhere to this commitment. All fill material shall be immediately stabilized and maintained to prevent sediment from entering adjacent waters or wetlands. The Design-Build Team shall be responsible for ensuring that the design and construction of the project will not impair the movement of aquatic life.

Permit Modification Timeframe

The Design-Build Team should expect it to take up to 11 months to accurately and adequately complete all designs necessary for permit modification application, submit the permit modification application request and obtain approval for the permits from the environmental agencies. Agency review time will be approximately 90 days from receipt of a "complete" package. No requests for additional contract time or compensation shall be allowed if the permits are obtained within this 11-month period. With the exception of location and survey work, utility relocations in upland areas, and separately permitted investigative borings no mobilization of men, materials, or equipment for site investigation or construction of project shall occur prior to obtaining the permits, either within the 11-month period or beyond the 11-month period. This limitation does not preclude the off-site fabrication of bridge members or equipment. The NCTA will not honor any requests for additional contract time or compensation, including idle equipment or mobilization or demobilization costs, for the Design-Build Team mobilizing men, materials (or ordering materials), or equipment prior to obtaining all permits. The NCTA will consider requests for contract time extensions for obtaining the permits only if the Design-Build Team has pursued the work with due diligence, the delay is beyond the Team's control, and the 11-month period has been exceeded. If time were granted, it would be only for that time exceeding the 11-month period. This 11-month period is considered to begin on the date of Notice to Proceed for preconstruction activities.

The Design-Build Team needs to be aware that the timeframes listed above to review any permit applications and/or modifications begin only after a fully complete and 100% accurate submittal.

Mitigation Responsibilities of the Design-Build Team

The NCTA will be responsible for compensatory mitigation for unavoidable impacts to wetlands, surface waters, and riparian buffers due to project construction not to exceed the amount denoted in the permit issued to the NCTA by the U.S. Army Corps of Engineers and NCDENR-DWQ. Any impacts incurred beyond the impacts detailed in the initial 404/401 Permit Application for which permits have been issued will be the responsibility of the Design-Build Team.

The Conceptual Mitigation Plan is incorporated by reference and summarized in the Final EIS. An updated Conceptual Mitigation Plan is included in the 404/401 Permit Application submitted by NCTA. This updated plan identifies potential on-site wetland and stream restoration and preservation sites. The Design-Build Team shall submit to the NCTA anticipated right-of-way limits that would be required to include these sites based on an approved Conceptual Design Plan for enhancement developed by the Design-Build Team. In addition, the Design-Build Team shall provide the approximate acreage of the additional right-of-way, beyond that needed to construct the project, which would be needed to purchase the on-site mitigation sites. This information shall be submitted no later than 7 weeks prior to the hydraulics review meeting with the environmental agencies. The NCTA will then make a determination of the economic feasibility of these sites and advise the Design-Build Team of any on-site mitigation that shall be included in the permit modification application. The NCTA will provide any narrative and details to the Design-Build Team for the permit modification application.

Any permit modifications proposed by the Design-Build Team to any design or construction details provided by the NCTA or NCDOT shall be approved by the NCTA prior to being

submitted to the environmental regulatory and resource agencies for their approval. Unless directed by the NCTA, should additional jurisdictional impacts result from revised design/construction details, suitable compensatory mitigation for wetlands and/or streams shall be the sole responsibility of the Design-Build Team. Therefore, it is important to note that additional mitigation shall be approved by the agencies and such approval shall require, at a minimum, the preparation and approval of a mitigation plan before permit modifications are approved and before construction shall commence. If suitable on-site mitigation is unavailable, then the mitigation may be obtained through the EEP.

The Design-Build Team shall analyze all new areas to be impacted that have not been analyzed during the NEPA process and preparation of permit applications. This analysis shall include performing all environmental assessments. These assessments shall require the Design-Build Team to engage the services of a competent environmental consultant to conduct a full environmental investigation to include, but not be limited to, Federally Listed Threatened and Endangered Species, wetlands, streams, avoidance and minimization in jurisdictional areas, Rapanos forms, compensatory mitigation, FEMA compliance, and historical, archaeological, and cultural resources surveys in these areas. The environmental consultant shall obtain concurrence through NCTA from the United States Fish and Wildlife Service to document compliance with Section 7 of the *Endangered Species Act* for those species requiring such concurrence. In addition, the Design-Build Team shall identify additional mitigation required; identify the amount of time the modification will take beyond the 11-month period; and fulfill any other regulatory agencies' requirements to obtain the permit. Any contract extensions resulting from additional environmental assessments required by the Design-Build Team's design and/or construction details impacting areas outside those previously analyzed through the NEPA Process shall be solely at the NCTA's discretion.

If any staging areas are located outside the project right-of-way, the Design-Build Team shall engage the services of a competent environmental consultant to conduct a full environmental investigation to include, but not be limited to, Federally Listed Threatened and Endangered Species, wetlands, streams, avoidance and minimization in jurisdictional areas, compensatory mitigation, FEMA compliance, and historical, archaeological, and cultural resources surveys in these areas.

Commitments

The NCTA is committed to incorporating all reasonable and practicable design features to avoid and minimize wetland impacts and to provide full compensatory mitigation of all wetland impacts. Avoidance measures were taken during the planning and NEPA Process and minimization measures were incorporated as part of the project's functional design. The Design-Build Team shall incorporate these avoidance and minimization features, plus any minimization identified during agency coordination efforts, into the design. An erosion and sedimentation control plan will be developed for the project prior to construction in accordance with all applicable regulations and guidance. The FHWA, NCTA, and NCDOT will work with the permitting agencies to determine the appropriate best management practices to implement for the project. These will include implementing Design Standards in Sensitive Watersheds for the entire project.

All work by the Design-Build Team shall be accomplished in strict compliance with the plans submitted with the Section 404 and 401 permit applications and in compliance with all conditions of all permits and certifications issued by the agencies. The Design-Build Team shall provide each of its contractors and/or agents associated with the construction or maintenance of this project with a copy of the permits.

As a condition of the 401 permit, where construction of the project requires draining of any ponds, the Design-Build Team shall develop a Pond Drainage Plan and submit to the NCTA and the environmental regulatory agencies for approval to include but not limited to pond size, past use, and control structure of the pond; classification, buffer requirements and flow of the receiving waters; procedures and rate of water drawdown; sediment control measures; water quality monitoring procedures; any plant or wildlife species concerns or considerations and fish relocation plan. This drainage plan shall also address procedures avoiding the inundation of a receiving body of water with deoxygenated or nutrient rich water resulting in impacts to aquatic life or algae bloom and procedures for maintaining downstream channel stability. Verify if the ponds being drained or ponds downstream and receiving the drainage water are on the NCDENR Dam Safety Inventory List. If such ponds are contained in the NC DENR Inventory List, follow all NCDENR Dam Safety procedures.

Unless noted otherwise elsewhere in this RFP, the Design-Build Team shall strictly adhere to these commitments, as well as others, including but not limited to, those included in the planning documents, all permits and interagency meetings.

Archeological Sites

If the Design-Build Team discovers any previously unknown historic or archeological remains while accomplishing the authorized work, they shall immediately notify the NCTA and NCDOT Staff Archaeologist who will initiate the required State/Federal coordination. A representative from the NCDOT Transportation Program Management Unit shall also be notified. All questions regarding these sites shall be addressed to Mr. Matthew Wilkerson, NCDOT PDEA Human Environment Unit, Archaeology Section.

RAILROAD COORDINATION SCOPE OF WORK (10-24-11)

Unless a distinction is made, it is the NCTA's intention that whenever this scope of work references "Railroad" this would be synonymous with Norfolk Southern Corporation. The Design-Build Team shall be responsible for coordinating all design and construction details on Railroad right of way, including protection and adjustments to existing and proposed railroad crossing surface and roadbeds, as needed. Coordination shall include any necessary agreements required by the NCTA, NCDOT and/or Railroad. The Design-Build Team shall be responsible for performing the Railroad work and for all costs associated with this work to include, but not be limited to, crossing surfaces, materials, insurance, flagging, and impacts to existing at-grade crossings, gates, and other appurtenances, unless otherwise detailed herein.

The Railroad will perform the following activities with their own forces and such activities will be included within the Force Account reimbursement:

- relocation and/or new installation of railroad signals/gates and associated work
- construction/installation of at-grade crossings
- connection of any new or temporary track alignments to existing operating track

In addition, all Continuous Welded Rail used for construction will be supplied by the Railroad and paid for by the force account. Jointed-Rail will not be allowed.

The Design-Build Team shall provide additional ballast and cross ties as may be required by the Railroad for the line-over. If railroad signals are replaced, the existing materials will become the property of the Railroad. All track and ties used for detour tracks will also become the property of the Railroad upon removal.

The Design-Build Team shall be responsible for applying for and securing temporary construction crossings through the Norfolk Southern Division Superintendent's Office. Existing private at-grade crossings are not to be utilized. Once permitted, temporary construction crossings will be required to be secured with crash gates and locked with a railroad lock only. The crossing materials, less the crash gates, will be furnished and installed by the Railroad forces. The crash gates locks will be opened by the Railroad and the temporary construction crossings will be flagged while in use.

NCTA will also assume the cost responsibility for the Norfolk Southern preliminary engineering, construction engineering, and signal and communication lines. The requirements herein govern over the second paragraph of Article 107-9 of the 2012 *Standard Specifications for Roads and Structures*.

The Design-Build Team shall coordinate with any utility owners within the Railroad right of way and accommodate such utilities during the bridge design and track work detailed herein.

The Design-Build Team shall be responsible for obtaining any permits for the conduit installation within the railroad right of way, and paying any associated fees. The permits shall be obtained in the NCTA's name. NCTA shall be responsible for any recurring annual fees that may be associated with such conduit installation.

Preparation for Construction within the Existing Railroad Right of Way

The Design-Build Team shall be required to use the following guidelines and any other guidelines as required by the Railroad.

(A) *AREMA Manual for Railroad Engineering*, latest edition
(B) *Norfolk Southern Corporation Special Provisions for Protection of Railway Interest*
(C) *Norfolk Southern Corporation "Standard Specifications for Materials and Construction, August 1997"*
(D) *Norfolk Southern Corporation Guidelines for Design of Grade Separation Structures*
(E) *Federal Aid Policy Guide 23 CFR 140I*
(F) *Federal Aid Policy Guide 23 CFR 646*
(G) *NCDOT Construction Manual*
(H) 2012 *Standard Specifications for Roads and Structures,* Section 107-9 (Excluding Paragraph 2)
(I) *North Carolina Administrative Code,* Section T19A: 02B, 0150 through 0158

The NCTA has verified the following for the proposed railroad impact locations:

- Proposed mainline bridge over Duke Plant Allen spur, springing from M.P. 388.26: an average of one (1) train per day, with a maximum operating speed of ten (10) miles per hour.
- Proposed West Blvd Extension over proposed/future Norfolk Southern Intermodal Yard, springing from approximate M.P. 385: no trains currently pass through this location.

Arrangements for Protection and Adjustments to Existing and Proposed Railroad Crossing Surface and Roadbeds

The Design-Build Team shall not commence any work on the Railroad right of way until all agreements have been executed, insurance acquired and approved, and all construction plans have been approved by the Railroad. The Design-Build Team shall make the necessary arrangements with the Railroad that are required to protect against property damage that may result in loss of service, expense, or life. The Design-Build Team shall be responsible for all damage to the Railroad resulting from their operations and the Railroad may issue a stop order until all dangerous situations are remedied.

The Design-Build Team shall be responsible for providing Railroad Protective Liability Insurance for Bodily Injury Liability, Property Damage Liability, and Physical Damage to Property. The typical coverage required is $5,000,000 Per Occurrence and $10,000,000 in Aggregate coverage Per Annual Policy Period. The Design-Build Team shall be responsible for verifying and obtaining the appropriate insurance and / or coverage with the Railroad. Additional Design-Build Team insurance responsibilities, including those for all subcontractors, are detailed in the standard Norfolk Southern Railroad Agreement provided to the short-listed teams.

The NCDOT and NCTA have a preliminary engineering agreement with Norfolk Southern. After award of the Contract, the Design-Build Team will be responsible for coordinating and obtaining a new preliminary engineering agreement prior to any review of project documents. The Design-Build Team will also be responsible for obtaining the construction agreement with

Norfolk Southern. The Design-Build Team shall be required to use the Standard NCDOT Cost Agreement and Insurance Special Provision forms that will be supplied by the NCDOT Rail Division upon request.

The Design-Build Team will be responsible for coordinating and obtaining a construction agreement using the standard NCDOT agreement with Norfolk Southern. After negotiations between the Design-Build Team and the Railroad have been finalized, the Design-Build Team shall submit agreements executed by Norfolk Southern and final plans approved by Norfolk Southern to NCTA's Chief Engineer for plan approval and final agreement execution by NCTA and / or NCDOT, prior to authorizing railroad work. After approval by NCTA and / or NCDOT, one copy of the executed agreement will be returned to the Design-Build Team and one copy forwarded to the Engineer, prior to any construction work by the Design-Build Team or Railroad.

Coordination with Norfolk Southern

The Design-Build Team shall coordinate with J. N. Carter, Jr., Chief Engineer, Bridges and Structures, Norfolk Southern Corporation, 1200 Peachtree Street, N. E., Atlanta, GA 30309-3579 (contact is Scott Overbey at 404-582-5588) to obtain plan approval and, if needed, a partially executed legal agreement with Norfolk Southern Corporation and the NCTA as the parties in the agreement for proposed roadway work. Prior to award of the contract, contact with the railroad shall be made through NC Turnpike Authority using the email address, **designbuild_GardenParkwayEast@ncdot.gov**. After award of the contract, the Design-Build Team will be provided contact information for obtaining plan approval and a partially executed legal agreement with Norfolk Southern, the NCTA, and the NCDOT as the parties in the agreement for:

- Overhead bridges crossing Norfolk Southern spur track serving Duke Energy Allen Plant
- Overhead bridge on West Blvd. bridge at future Charlotte Regional Intermodal Facility

The NCTA and NCDOT will review the engineering and construction agreements prior to submittal to the Railroad. The NCTA and NCDOT will execute and distribute the engineering and construction agreements within 14 calendar days of receipt. The agreements shall include necessary Force Account items such as preliminary engineering, construction engineering, flagging, and signal and communication lines. The NCTA will be responsible for payment of the Railroad Force Account work listed above; however, the Design-Build Team shall reimburse the NCTA for all flagging costs. This reimbursement shall be included in the lump sum price bid for the project. Upon request, the NCTA will provide copies of the railroad's invoices to the Design-Build Team for review. The Design-Build Team shall have ten (10) days to provide comments to the NCTA, after which the NCTA will pay the invoice. The Design-Build Team shall be responsible for maintaining records to verify the invoice items.

The preliminary plan submittal to the Railroad shall include bridge plans, preliminary track work plans, the Railroad's "Overhead Bridge Crossing Data" appropriate roadway plan sheets showing impacts to the Railroad's right of way, erosion control plans, temporary shoring and drainage calculations for any drainage on or across the Railroad's right of way. Submit all plans and correspondence electronically using *pdf* format to Norfolk Southern Railroad and their approved

GEC consultant, on behalf of the NCTA. If the Railroad requires RFC's and / or final plans, then **make all submittals electronically as noted above**. If any re-submittals of plans or any additional information is required, submit to the railroad electronically as noted above. The Design-Build Team shall submit signed and sealed design calculations with the final design to Norfolk Southern Railroad and approved consultant for review and acceptance. Working Drawings affecting the Railroad's operations and / or right of way shall follow submittal process as outlined in the 2012 *Standard Specifications for Roads and Structures* and / or Special Provisions.

Upon completion of the Norfolk Southern structures, the Design-Build Team shall submit coordinately correct as-built drawings and details to NCTA and Norfolk Southern. Electronically submit as-built plans to the railroad as noted above.

EROSION AND SEDIMENTATION CONTROL SCOPE OF WORK (11-07-11)

The Design-Build Team shall schedule and conduct construction activities in a manner that will minimize soil erosion and the resulting sedimentation and turbidity of surface waters. In addition grading operations shall be strictly performed in accordance with Article 225-2 of the 2012 *Standard Specifications for Roads and Structures*. Comply with the requirements herein regardless of whether or not a National Pollutant Discharge Elimination System (NPDES) permit for the work is required.

The Design-Build Team shall include within their Technical Proposal a narrative overview detailing their Vegetation Management Plan. The Vegetation Management Plan shall include, but not be limited to, provisions for the early establishment of grasses / vegetation, and procedure and schedule details for fertilizer topdressing, supplemental seeding, mowing and repair seeding. The Vegetation Management Plan shall be closely coordinated with the grading and mass haul operations.

Once construction begins, the Design-Build Team shall maintain comprehensive "red-line" As-Built Plans that detail when and where permanent / temporary / repair seeding and topdressing have been performed.

Authority

The NCDOT Roadside Environmental Unit (REU) has the authority to (1) identify special needs for this project, including the acquisition of additional right-of-way; (2) mandate special details to be included in the design plans or special provisions; (3) conduct on site plan reviews for compliance and require design changes to accommodate field changes; (4) inspect all construction sites including waste and borrow pits and haul roads; and (5) issue violation notifications or cease and desist orders. The NCDOT REU will also retain authority in plan, detail, and special provision review and acceptance.

General

The NCTA and NCDOT REU shall review and accept all Erosion and Sedimentation Control Plans. Clearing & Grubbing and Final Grade Release for Construction (RFC) Erosion Control Plans shall be submitted to all NCTA and NCDOT Personnel listed in the Design-Build Submittal Guidelines before **any** land disturbing activities, including clearing and grubbing, can commence. If the Design-Build Team chooses to perform the work in discrete sections, then a complete set of Clearing & Grubbing and Final Grade RFC Erosion Control Plans shall be submitted, accepted, and distributed as noted above prior to land disturbing activities, including clearing and grubbing, commencing in that section. No land disturbing activities, including clearing and grubbing, shall occur in any location that does not have accepted Clearing & Grubbing and Final Grade RFC Erosion Control Plans. Refer to the most recent version of the *NCDENR - Erosion and Sediment Control Planning and Design Manual* for erosion control design guidelines not addressed in this Scope of Work.

Erosion and Sedimentation Control Plans shall at a minimum address the following:

I. Complete Set of Plans

A. Clearing and Grubbing Phase

1. Use correct NCDOT symbology.
2. Protect existing drainage structure inlets with Rock Inlet Sediment Trap Type 'A' (RIST-A), Rock Inlet Sediment Trap Type 'C' (RIST-C), Rock Pipe Inlet Sediment Trap Type 'A' (PIST-A), etc.
3. Utilize adequate perimeter controls (temporary silt ditches (TSD), temporary silt fence (TSF), etc.
4. Utilize skimmer basins or other approved surface dewatering devices for outlets with drainage areas of 1 acre or more. For drainage areas less than 1 acre, utilize surface dewatering devices at jurisdictional outlets and rock outlet measures with sediment control stone (Temporary Rock Sediment Dam Type 'B' (TRSD-B), Temporary Rock Silt Check Type 'A' (TRSC-A), etc.) can be used at non-jurisdictional drainage outlets.
5. Take into account existing topography and show contour lines.
6. Utilize Temporary Rock Silt Checks Type 'B' (TRSC-B) to reduce velocity in existing ditches with spacing of 250 feet divided by percentage of ditch grade. Also utilize TRSC-Bs in proposed TSDs and temporary diversions (TD).
7. Protect existing streams; do not place erosion control devices in live streams.
8. Provide adequate silt storage for 3600 cubic feet per disturbed acre and sediment basins shall be sized with surface area equal to 435 square feet per cubic foot per second (cfs) of the peak inflow rate, Q25, using 25-year peak rainfall data (NCDENR *Erosion and Sediment Control Planning and Design Manual* or NOAA's National Weather Service web site **http://hdsc.nws.noaa.gov/hdsc/pfds/orb/nc_pfds.html** for partial duration (ARI) time series type). A Sediment Basin Designer Spreadsheet will be provided by the NCDOT Roadside Environmental Unit (REU) upon request.
9. Design Riser Basins to the following standards:
    a. Surface Area shall be determined by Equation A(sq. feet) = Q25(cfs) * 435
    b. Volume requirement shall be 1800 cubic feet per disturbed acre draining to the riser basin
    c. Riser Pipe shall have a cross-sectional area 1.5 times that of the barrel pipe
    d. The riser pipe shall be non-perforated with a skimmer attached to the bottom of the pipe 1 ft. from the bottom of the basin
    e. See NCDENR *Erosion and Sediment Control Planning and Design Manual* for additional design criteria

10. Skimmer Basins shall provide adequate silt storage for 1800 cubic feet per disturbed acre with surface area equal to 325 square feet per cubic foot per second (cfs) of the peak inflow rate, Q25, using the 25-year peak rainfall data (NCDENR *Erosion and Sediment Control Planning and Design Manual* or NOAA's National Weather Service web site **http://hdsc.nws.noaa.gov/hdsc/pfds/orb/nc_pfds.html** for partial duration (ARI) time series type). A Skimmer Basin Designer Spreadsheet will be provided by the NCDOT Roadside Environmental Unit (REU) upon request.
11. Show 50-foot Environmentally Sensitive Area (ESA) around Catawba River and South Fork Catawba River and all unnamed tributaries on Clearing & Grubbing EC Plans only.
12. Follow NCDOT Design Standards in Sensitive Watersheds for implementing erosion and sediment control BMPs along the entire project. This document differs from the NCAC Section 15A Part 04B.0124.
13. The minimum and maximum length to width ratio of all Sediment Basins shall be 2:1 and 6:1, respectively.
14. Coir Fiber Baffles shall be installed in all silt basins and sediment dams at drainage outlets. For silt basins with a 20-foot or longer length, three Coir Fiber Baffles shall be installed with a spacing of 1/4 the basin length. For silt basins with a length less than 20 feet, a minimum of two Coir Fiber Baffles shall be installed, with a spacing of 1/3 the basin length. The Design-Build Team will not be required to show the individual baffles on the Erosion Control Plans, but shall be required to incorporate the Coir Fiber Baffle Detail on the Erosion Control Plans.
15. Include any culvert and / or pipe construction sequence plan sheets in the Clearing & Grubbing Erosion Control Plans; all pipes 48" or larger, or any combination of pipes that total 48" or more require a construction sequence. Prior to installation of pipes smaller than 48" in jurisdictional areas, the Design Build Team shall submit a phasing plan for managing the watercourse to the Resident Engineer for review and acceptance. The phasing plan shall be in accordance with the Best Management Practices for Construction and Maintenance Activities.
16. Incorporate temporary sediment basins into permanent stormwater devices.
17. Utilize Coir Fiber Wattles with Polyacrylamide (PAM) and/or TRSC-As with Matting and PAM in temporary and permanent, existing and proposed ditches at a spacing of 50 feet in areas where sediment basins are not feasible at drainage outlets, and in areas where sediment basins at drainage outlets with sediment traps (i.e. PIST-A, RIST-A, etc.), cannot be properly sized to surface area and / or sediment storage requirements due to safety concerns, right of way restrictions, utility conflicts or other construction limitations approved by the Roadside Environmental Unit. Utilize TRSC-As with Matting and PAM in ditches with greater than a 2.5% grade.
18. The Erosion and Sediment Control Plans shall incorporate devices utilizing PAM as stated in Item 17, or other approved Turbidity reduction methods, for all areas draining to South Fork Catawba River and unnamed tributaries.

19. In wetland areas adjacent to fill slopes, show silt fence with 15-foot sediment control fence sections spaced every 200 feet as directed.
20. Do not place erosion control devices that require excavation (i.e. basins, silt ditches, etc.) in wetlands or buffer zones.

B. Final Grade Phase

1. Use correct NCDOT symbology.
2. Protect existing and proposed drainage structure inlets with RIST-A, RIST-C, PIST-A, etc.
3. Utilize adequate perimeter controls (TSD, TSF, etc.)
4. Utilize TRSC-Bs to reduce velocity in existing and proposed ditches with spacing of 250 feet divided by percentage of ditch grade. Also utilize TRSC-Bs in proposed TSDs and TDs.
5. Utilize temporary slope drains and earth berms at top of fill slopes 8 feet or higher and a fill slope grade of 3:1 or steeper, or where there are superelevations above 0.04 and fills are greater than 5 feet. Maximum slope drain spacing shall be 200 feet.
6. Utilize rock energy dissipater and / or silt basin at outlet of slope drain.
7. Devices at all drainage turnouts shall utilize skimmer or sediment control stone (TRSD-B, TRSC-A, etc.) and a spillway with an adequately designed base length to distribute outflow.
8. Provide adequate silt storage for 3600 cubic feet per disturbed acre and sediment basins shall be sized with surface area equal to 435 square feet per cubic foot per second (cfs) of the peak inflow rate, Q25, using 25-year peak rainfall data (NCDENR *Erosion and Sediment Control Planning and Design Manual* or NOAA's National Weather Service web site **http://hdsc.nws.noaa.gov/hdsc/pfds/orb/nc_pfds.html** for partial duration (ARI) time series type). A Sediment Basin Designer Spreadsheet will be provided by NCDOT REU upon request.
9. Provide matting for erosion control in all ditch lines, including but not limited to temporary ditch lines (TDs) utilized to divert offsite runoff around construction areas, where the velocity is greater than 2.0 ft/s, and the shear stress is 1.55 psf or less. For ditch lines with a shear stress above 1.55 psf, Permanent Soil Reinforcement Mat or Rip Rap shall be utilized.
10. Provide matting for erosion control on all fill slopes 2:1 or steeper.
11. Design Riser Basins to the following standards:
    a. Surface Area shall be determined by Equation A(sq. feet) = Q25(cfs) * 435
    b. Volume requirement shall be 1800 cubic feet per disturbed acre draining to the riser basin

c. Riser Pipe shall have a cross-sectional area 1.5 times that of the barrel pipe

d. The riser pipe shall be non-perforated with a skimmer attached to the bottom of the pipe 1 ft. from the bottom of the basin

e. See NCDENR *Erosion and Sediment Control Planning and Design Manual* for additional design criteria

12. Skimmer Basins shall provide adequate silt storage for 1800 cubic feet per disturbed acre with surface area equal to 325 square feet per cubic foot per second (cfs) of the peak inflow rate, Q25, using the 25-year peak rainfall data (NCDENR *Erosion and Sediment Control Planning and Design Manual* or NOAA's National Weather Service web site **http://hdsc.nws.noaa.gov/hdsc/pfds/orb/nc_pfds.html** for partial duration (ARI) time series type). A Sediment Basin Designer Spreadsheet will be provided by the NCDOT Roadside Environmental Unit (REU) upon request.

13. Follow NCDOT Design Standards in Sensitive Watersheds for implementing erosion and sediment control BMPs along the entire project. This document differs from the NCAC Section 15A Part 04B.0124.

14. The minimum and maximum length to width ratio of all Sediment Basins shall be 2:1 and 6:1, respectively.

15. Coir Fiber Baffles shall be installed in all silt basins and sediment dams at drainage outlets. For silt basins with a 20-foot or longer length, three Coir Fiber Baffles shall be installed with a spacing of 1/4 the basin length. For silt basins with a length less than 20 feet, a minimum of two Coir Fiber Baffles shall be installed, with a spacing of 1/3 the basin length. The Design-Build Team will not be required to show the individual baffles on the Erosion Control Plans, but shall be required to incorporate the Coir Fiber Baffle Detail on the Erosion Control Plans.

16. Incorporate temporary sediment basins into permanent stormwater devices.

17. Utilize Coir Fiber Wattles with Polyacrylamide (PAM) and/or TRSC-As with Matting and PAM in temporary and permanent, existing and proposed ditches at a spacing of 50 feet in areas where sediment basins are not feasible at drainage outlets, and in areas where sediment basins at drainage outlets with sediment traps (i.e. PIST-A, RIST-A, etc.), cannot be properly sized to surface area and / or sediment storage requirements due to safety concerns, right of way restrictions, utility conflicts or other construction limitations approved by the Roadside Environmental Unit.

18. The Erosion and Sediment Control Plans shall incorporate devices utilizing PAM as stated in Item 17, or other approved Turbidity reduction methods, for all areas draining to South Fork Catawba River and unnamed tributaries.

19. Streambank Reforestation for mitigation shall be shown as a cross hatched pattern and extend 50 ft. from the top of the stream bank.

20. In wetland areas adjacent to fill slopes, show silt fence with 15-foot special sediment control fence sections spaced every 200 feet and as directed.

21. Do not place erosion control devices that require excavation (i.e. basins, silt ditches, etc.) in wetlands or buffer zones.

C. Intermediate Phase

Intermediate Erosion Control Plans shall only be required if design modifications and / or site conditions require additional erosion control design or design revisions to the RFC Clearing and Grubbing and / or RFC Final Grade Erosion Control Plans. Intermediate Plans shall be submitted for review and shall be accepted prior to construction of any aspect impacted by the revised erosion control design. For any intermediate phase, comply with Section B, "Final Grade Phase" above.

II. Detail Sheets and Notes

A. Provide project specific special notes and details such as, skimmer basin, coir fiber wattle with Polyacrylamide (PAM), etc.

B. Provide matting summary sheet(s): matting for erosion control and permanent soil reinforcement mat.

C. Provide reforestation sheet(s): regular, wetland, streambank and / or buffer showing appropriate species.

III. Title Sheet

A. Show correct notes: HQW, ESA, clearing and grubbing, etc.

B. List of standard NCDOT symbology

C. Show name and certification number of Level IIIA certified individual responsible for designing and / or reviewing Erosion and Sedimentation Control Plans

IV. Special Provisions

A. Erosion Control Special Provisions are available at the following website:

www.ncdot.org/doh/operations/dp_chief_eng/roadside/soil_water/special_provisions/

B. References in Erosion Control Special Provisions from the aforementioned website to Method of Measurement, Basis of Payment, or any other statement regarding direct payment for Erosion & Sediment Control measures shall be disregarded

C. Erosion Control / Stormwater Certification found elsewhere in this RFP

V. Miscellaneous

A. Plan submittals shall include all pertinent design information required for review, such as design calculations, drainage areas, etc.

B. The NCDOT REU will provide a sample set of Erosion and Sedimentation Control Plans (including any special details or special provisions used by the NCDOT REU) and MicroStation Erosion Control Workspace to the Design-Build Team for reference upon request.

C. Plans shall address any environmental issues raised during the permitting process.

D. Sufficient time shall be allowed for the Design-Build Team to make any changes to the Erosion and Sedimentation Control Plans deemed necessary by the NCDOT REU.

E. Temporary access and haul roads, other than public roads, constructed or used in connection with the project shall be considered a part of the project and addressed in the Erosion and Sedimentation Control Plans.

F. Borrow or waste areas that are part of the project shall require a separate Reclamation Plan, unless the borrow or waste activity is regulated under the *Mining Act of 1971*, or is a landfill regulated by the Division of Solid Waste Management (NCDENR). The Design-Build Team shall submit the permit number for waste / borrow sites covered by the Mining Act or regulated by DSWM (DENR) concurrently to NCTA and the Transportation Program Management Director and the Resident Engineer. For Reclamation Procedures, see:

www.ncdot.org/doh/operations/dp_chief_eng/roadside/fieldops/downloads/Files/ContractedReclamationProcedures.pdf

G. Whenever the Engineer determines that significant erosion and sedimentation continues despite the installation of approved protective practices, the Design-Build Team shall be required to and shall take additional protective action.

H. An accepted Erosion and Sedimentation Control Plan does not exempt the Design-Build Team from making every effort to contain sediment onsite.

I. Any Erosion Control Design revisions made during the construction of the project shall be submitted to NCDOT REU by the 15th of the month via the Transportation Program Management Director. At any time requested by the Engineer or the Roadside Environmental Unit, the Design-Build Team shall provide an updated version of the Erosion and Sedimentation Control Plans for distribution to all parties involved in the construction process.

J. The Design-Build Team shall comply with the *North Carolina Administrative Code Title 15A Department of Environment and Natural Resources Chapter 4, Sediment Control*.

K. A pre-design meeting shall take place between the NCTA, NCDOT REU Soil & Water Engineering Section, the Design-Build Team, and any other pertinent NCDOT personnel before any Erosion and Sedimentation Control Designs are submitted to NCDOT REU. Erosion and Sedimentation Control Plan submittals shall only be reviewed and accepted by NCTA and NCDOT REU after the Erosion Control Pre-Design Meeting. The Design

Build Team shall be required to submit a tentative Erosion and Sedimentation Control Plan submittal schedule at the pre-design meeting.

L. At minimum, the Design-Build Team shall bring one erosion control plan sheet with a Clearing & Grubbing erosion control design to the Erosion and Sedimentation Control Plan pre-design meeting.

M. All RFC Erosion and Sedimentation Control Plans, including any red line revisions, shall be kept on site at all times throughout the duration of the project.

N. Erosion Control / Stormwater Certification shall be required according to the Project Special Provision found elsewhere in this RFP.

O. Prior to installation of any erosion control devices, the Design-Build Team shall verify boundaries of jurisdictional areas in the field and delineated with Safety Fence or flagging. For guidance on Safety Fence and flagging in jurisdictional areas, see:

www.ncdot.org/doh/operations/dp_chief_eng/roadside/fieldops/downloads/

P. Once RFC Erosion and Sedimentation Control Plans are issued, any major design change or addition, any change that involves calculations, and any addition, deletion, or relocation of a sediment basin shall be submitted to the NCDOT REU for review and acceptance. Minor changes such as moving silt fence, adding or moving temporary ditches (unless adding new flow to a sediment basin), and adding or moving slope drains shall be reviewed by the Engineer in the field.

Q. All erosion control measures with stone extending beyond the construction limits shall be considered temporary fill. If impacted wetland areas are permitted as Hand Clearing, then the aforementioned temporary fill shall be permitted as Temporary Fill in Hand Cleared Areas for Erosion Control. (Reference the Environmental Permits Scope of Work found elsewhere in this RFP)

R. Sediment basins that drain directly into jurisdictional water or have a total drainage area of one acre or more, shall be designed and constructed with outlet structures that only withdraw water from the surface. For sediment basins that do not drain directly into jurisdictional water or have less than one acre of total drainage area, surface dewatering outlets and stone outlets may be provided.

S. Ground cover stabilization shall comply with the timeframe guidelines specified by the North Carolina Department of Environment and Natural Resources Division of Water Quality NCG-010000 General Construction Permit that became effective on August 3, 2011. Excluding the slopes noted below, temporary and permanent ground cover stabilization shall be provided within seven calendar days from the last land-disturbing activity. The Design-Build Team shall label all slopes subject to the seven-day ground cover stabilization requirements on all Erosion and Sedimentation Control Plans submitted to NCTA for review and acceptance.

For the slopes noted below, temporary and permanent ground cover stabilization shall be provided within 14 calendar days from the last land-disturbing activity:

- Slopes between 2:1 and 3:1, with a slope length of 10 feet or less
- Slopes 3:1 or flatter, with a slope length of 50 feet or less
- Slopes 4:1 or flatter

Temporary and permanent ground cover stabilization shall be provided in accordance with the provisions in this contract and the Vegetation Management Plan developed by the Design-Build Team.

Ground cover stabilization shall be done in accordance with the following:

1. **Short Term Stabilization: 0 – 14 Days**

   At a minimum, erodible areas that will not be disturbed for 14 days or less shall be stabilized utilizing non-vegetative cover. Non-vegetative cover options include straw mulch, hydraulic applied erosion control products or rolled erosion control products.

2. **Mid-Term Stabilization: 14 – 90 Days**

   Erodible areas that will not be disturbed for more than 14 days and less than 90 days shall be stabilized utilizing the following stabilization protocol:

September 1 - May 31	**June 1 - August 31**
75# Rye Grain or Wheat	75# German or Browntop Millet
500# Fertilizer	500# Fertilizer
4000# Limestone	4000# Limestone

3. **Long Term Stabilization: 90+ Days**

   Erodible areas that will not be disturbed for more than 90 days shall be stabilized utilizing the following stabilization protocol:

Shoulder and Median Areas

September 1 - May 31	**June 1 - August 31**
20# Kentucky Bluegrass**	20# Kentucky Bluegrass**
75# Hard Fescue***	75# Hard Fescue***
25# Rye Grain	10# German or Browntop Millet
500# Fertilizer	500# Fertilizer
4000# Limestone	4000# Limestone

Areas Beyond the Mowing Pattern, Waste and Borrow Areas

September 1 - May 31	**June 1 - August 31**
100# Tall Fescue*	100# Tall Fescue*
15# Kentucky Bluegrass**	15# Kentucky Bluegrass**
30# Hard Fescue***	30# Hard Fescue***
25# Rye Grain	10# German or Browntop Millet
500# Fertilizer	500# Fertilizer
4000# Limestone	4000# Limestone

*** Approved Tall Fescue Cultivars**

2nd Millennium	Duster	Magellan	Rendition
Avenger	Endeavor	Masterpiece	Scorpion
Barlexas	Escalade	Matador	Shelby
Barlexas II	Falcon II, III, IV & V	Matador GT	Signia
Barrera	Fidelity	Millennium	Silverstar
Barrington	Finesse II	Montauk	Southern Choice II
Biltmore	Firebird	Mustang 3	Stetson
Bingo	Focus	Olympic Gold	Tarheel
Bravo	Grande II	Padre	Titan Ltd
Cayenne	Greenkeeper	Paraiso	Titanium
Chapel Hill	Greystone	Picasso	Tomahawk
Chesapeake	Inferno	Piedmont	Tacer
Constitution	Justice	Pure Gold	Trooper
Chipper	Jaguar 3	Prospect	Turbo
Coronado	Kalahari	Quest	Ultimate
Coyote	Kentucky 31	Rebel Exeda	Watchdog
Davinci	Kitty Hawk	Rebel Sentry	Wolfpack
Dynasty	Kitty Hawk 2000	Regiment II	
Dominion	Lexington	Rembrandt	

**** Approved Kentucky Bluegrass Cultivars**

Alpine	Bariris	Envicta	Rugby
Apollo	Bedazzled	Impact	Rugby II
Arcadia	Bordeaux	Kenblue	Showcase
Arrow	Champagne	Midnight	Sonoma
Award	Chicago II	Midnight II	Signia

***** Approved Hard Fescue Cultivars**

Chariot	Nordic	Rhino	Warwick
Firefly	Oxford	Scaldis II	
Heron	Reliant II	Spartan II	
Minotaur	Reliant IV	Stonehenge	

From January 1 – December 31, the Design-Build Team shall apply an additional 20# of Sericea Lespedeza on cut and fill slopes 2:1 or steeper.

Fertilizer shall be 10-20-20 analysis or a different analysis that provides a 1-2-2 ratio applied at a rate that provides the same amount of plant food as a 10-20-20 analysis and as directed.

4. **Soil Analysis**

   If vegetation establishment indicates a deficiency in soil nutrients or an incurred pH level is present, the Design-Build Team shall take soil samples and apply additional soil amendments to the affected area(s) as directed.

5. **Fertilizer Topdressing**

   Fertilizer used for topdressing shall be 10-20-20 analysis applied at a rate of 500 pounds per acre; or a different analysis that provides a 1-2-2 ratio applied at a rate that provides the same amount of plant food as a 10-10-20 analysis and as directed.

   Fertilizer used for waste and borrow areas shall be 16-8-8 grade applied at a rate of 500 pounds per acre; or a different analysis that provides a 2-1-1 ratio applied at a rate that provides the same amount of plant food as a 16-8-8 analysis and as directed.

6. **Supplemental Seeding**

   For all supplemental seeding, the kinds of seed and proportions shall be the same as specified above for *Long Term Stabilization*. The rate of application for supplemental seeding shall be between 25# to 75# per acre. Prior to topdressing, the Design-Build Team shall determine the actual rate per acre for supplemental seeding and submit the supplemental seeding rate and areas to the Department for review and acceptance.

   To prevent disturbance of existing vegetation, minimum tillage equipment, consisting of a sod seeder, shall be used to incorporate seed into the soil where degree of slope allows. Where degree of slope prevents the use of a sod seeder, a clodbuster (ball and chain) may be used.

7. **Mowing**

   The minimum mowing height shall be six inches.

ENVIRONMENTAL INCENTIVES

The Design-Build Team shall observe and comply with Federal and State Laws, Local Laws, Ordinances, and Regulations; as well as Orders and Decrees of Bodies having any jurisdiction or authority in accordance with Section 107 of the 2012 *Standard Specifications for Roads and Structures* and as may be amended by the Standard Special Provision, Division One.

The Design-Build Team will be eligible for an incentive in the amount of $200,000.00 if construction operations have been performed in accordance with all environmental regulations and the Specifications, and no violations have been issued. Violations are defined as.

Violation	Issuing Entity
Immediate Corrective Action (ICA)	Department
Continuance of an ICA (CICA)	Department
Notice of Violation (NOV)	Regulatory Agencies
Cease and Desist (C&D)	Corp of Engineers

The incentive payment shall be paid at the completion of the project as long as the Design-Build Team does not receive any violations at any time during project construction.

EROSION CONTROL LIQUIDATED DAMAGES

The Design-Build Team's first NOV or C&D order violation shall result in a forfeiture of the entire incentive noted above. The Design-Build Team will forfeit $50,000.00 from the incentive or portion remaining for each ICA and / or CICA violation. Upon the forfeiture of the entire $200,000.00 incentive, damages in the amount of $10,000 per day for a NOV, C&D order, or CICA violation or $2,500 per day for an ICA violation shall be deducted from the lump sum bid amount due to the Design-Build Team until the NOV, C&D order, CICA or ICA is lifted.

In addition, the CEI firm has a direct responsibility to ensure the Design-Build Team does not receive any Immediate Corrective Actions (ICA), Continuances of Immediate Correction Action (CICA), Notices of Violation (NOV), and/or Cease and Desist (C&D) orders at any time during the project. The Design-Build Team shall include language within their subcontract agreement with the CEI firm and apply a disincentive in the amount of $5,000 per violation from the lump sum amount directed to the CEI Firm for each NOV, C&D order, CICA or ICA.

The Design-Build Team shall observe and comply with Federal and State Laws, Local Laws, Ordinances, and Regulations; as well as Orders and Decrees of Bodies having any jurisdiction or authority in accordance with Section 107 of the 2012 *Standard Specifications for Roads and Structures* and as may be amended by the Standard Special Provision, Division One.

The Design-Build Team shall take all reasonable precautions to comply with all regulations of all authorities having jurisdiction over public and private land governing the protection of erosion and sedimentation. Any fines, remediation required or charges levied against the Department for failing to comply with all rules and regulations concerning erosion and sediment control, due to the Design-Build Team's negligence, carelessness, or failure to implement the Erosion and Sedimentation Control Plans and Specifications; or failure to maintain an approved Storm Water Pollution Prevention Plan (SWPPP), regardless of absence of neglect, shall be deducted from monies due the Design-Build Team. In addition to said fines, remediation required, or charges levied, any associated engineering costs or actions taken by the Department in order for the Department to comply with rules and regulations, as a result of the Design-Build Team's negligence, carelessness, or failure to implement the Erosion and Sedimentation Control Plans and Specifications; and / or the SWPPP, regardless of absence of neglect, shall be deducted from the monies due to the Design-Build Team.

INTELLIGENT TRANSPORTATION SYSTEM (ITS) SCOPE OF WORK (11-1-11)

GENERAL REQUIREMENTS

(A) DESCRIPTION

1. Summary of Work

This section of the RFP will provide the NCTA Garden Parkway with intelligent transportation system (ITS) devices and fiber-optic communications.

This ITS subsystem includes, but is not limited to:

- Closed circuit television (CCTV) cameras,
- Color, full-matrix dynamic message signs (DMS),
- Microwave vehicle detection systems (MVDS),
- Road weather information system (RWIS),
- Equipment installation and software integration in the new Joint Forces STOC facility and the Metrolina Regional Transportation Management Center on 2327 Tipton Drive in Charlotte,
- A Ethernet-based fiber-optic communications system comprised of approximately 22 cable miles of fiber-optic cable for the toll collection and ITS, and
- Approximately 12 miles of trunkline, lateral and drop conduit for the toll collection and ITS.

The Garden Parkway West Design-Build Team will install the conduit system (including conduit, boxes, tracer wire, etc.) only within their project limits as shown on the ITS Concept Plans. Within the Garden Parkway West project limits, the Garden Parkway East Design-Build Team shall install the short conduit segment between the existing pull box near the ITS device location and the MVD and CCTV device poles.

The East Design-Build Team shall be responsible for designing, furnishing, and installing the CCTVs, MVDS, and RWIS with metal poles and foundations for both the east and west projects The Design-Build Team shall furnish and install the DMS signs on structures described elsewhere in this RFP.

Within their project limits, the Garden Parkway West team will install DMS on structures and provide cabinet, controller, power and ancillary equipment to test under local control within their project limits. The Garden Parkway East team will provide equipment to establish end-to-end connectivity to the communications system and will conduct the system testing.

All other ITS devices on both project segments will be provided, installed and tested by the Garden Parkway East team.

The communications infrastructure will consist of underground conduit system including conduit, tracer wire, junction boxes, heavy-duty junction boxes, splice enclosures, and single-mode fiber-optic cable.

The Design-Build Team is to design and install the complete conduit system (as described in this Scope of Work) to service all ITS devices and toll facilities within their project limits.

Relocate / replace NCDOT's ITS conduit, devices, and cable along I-485 as necessary to facilitate road and bridge construction.

Two fiber-optic cables shall be installed in the conduit system; one for ITS equipment and the other for tolls equipment. The ITS cable will be spliced to an existing 72-fiber NCDOT cable at an existing or relocated splice box in the vicinity of the I-485/West Blvd. interchange.

Furnish and install fiber-optic splice/termination centers for both the tolls and ITS systems. The tolls equipment will be installed by others.

All communications between proposed ITS field devices and the local hub shall be Ethernet over single-mode fiber-optic cable. Design-Build Team shall furnish and install Ethernet edge switches, routing switches, and related electronics.

The Design-Build Team shall provide modifications to NCDOT's MRTMC to expand the video wall display system, core switch and the Hub 6 routing switch.

The Design-Build Team shall be responsible for determining the exact location of the ITS devices, conduit and junction boxes, obtaining Engineer's approval of the locations, installing conduit, tracer wire, junction boxes, heavy-duty junction boxes, and developing and implementing test and coordination procedures. The basis of the design shall be the ITS Concept Plans provided by the NCTA.

In order to consistently confine maintenance activities to the right shoulder, NCTA will consider median locations for devices acceptable <u>only</u> if there are exceptional circumstances along the right shoulder that make device locations there inadvisable. If located in the median, devices would need to be protected by guardrail, and be able to be serviced / maintained without a shoulder closure.

Upon completion of the work, the Design-Build Team shall conduct field-testing of the communications system, ITS devices, and software using an approved test plan, perform integration, and maintain all hardware and software until final acceptance by the NCTA.

The Design-Build Team shall be responsible for submitting applications, including application fees associated for any permits for the conduit installation. This will include, but not limited, any pole attachment fees, railroad and other right of way encroachment permits, and utility connection fees. The Design-Build Team shall obtain railroad right of way encroachment permits if it is necessary to enter or cross the railroad right of way to install fiber-optic cable in the ITS conduit across any railroad rights of way. All fees associated with crossing the railroad rights of way shall be structured as a one-time cost with no recurring annual fees. Any permits shall be obtained in NCTA's name.

2. Standard Specifications

Conform to this Scope of Work and the 2012 *Standard Specifications for Roads and Structures*, herein after referred to as the "*Standard Specifications*", the 2012 *Roadway Standard Drawings*, and the ITS Concept Plans (which also include the ITS Standard Details and ITS Special Details). Conform also to *All-Electronic Tolling (AET) Standard Drawings* and All-Electronic Tolling (AET) Toll Zone Scope of Work. Conform to the regulations and codes described in Section 1700 of the *Standard Specifications*.

In the event of conflict between this Scope of Work and the *Standard Specifications*, this Scope of Work shall govern.

The *Standard Specifications* are revised as follows:

- Subarticle 1098-1(H) - In the second paragraph, add, "use 200 amp meter base for underground electrical service".

Reference is made to the "Project Special Provisions for Signals and Intelligent Transportation Systems". The document can be found at the following link:

www.ncdot.org/doh/preconstruct/traffic/ITSS/ws/PSP.doc

This document is continually updated. The version that governs the Design-Build Team is Version 12.0.

3. Systems Engineering

The development of the plans, specifications, and estimates shall adhere to NCTA and NCDOT standards, specifications, and the requirements of the Metrolina Regional ITS Architecture as defined in the North Carolina Statewide ITS Strategic Deployment Plan. Develop a systems engineering document (SEMP) that defines the physical and functional requirements of the system to ensure consistency with the Metrolina Regional ITS Architecture and to ensure conformance with the requirements of 23 CFR 940.11.

4. Other Codes and Standards

All communication conduit system materials must conform to the latest version of the applicable standards of the National Electric Manufacturer's Association (NEMA), the Underwriters' Laboratories, Inc. (UL), the Electronic Industries Association (EIA), the National Electric Code (NEC), the International Municipal Signal Association (IMSA), and the National Electrical Safety Code (NESC). All materials and workmanship must conform to the standards of the American Society for Testing and Materials (ASTM) and American National Standards Institute (ANSI).

(B) MATERIALS

1. Qualified Products

Furnish new equipment, materials, and hardware unless otherwise required. Inscribe manufacturer's name, model number, serial number, and any additional information needed for proper identification on each piece of equipment housed in a case or housing.

Certain categories of signal and communications equipment, material, and hardware shall be pre-approved on the latest version of the QPL by the date of installation. These categories are defined in this Scope of Work.

2. Observation Period

Warrant workmanship and Design-Build Team-furnished equipment for a 60-day observation period under the payment and performance bond from date of acceptance.

3. Wire and Cable

Furnish wire and cable on reels. When requested by NCTA, furnish samples of wire and cable to NCTA at no additional cost.

(C) CONSTRUCTION COORDINATION

1. Introduction

This section addresses coordination issues that may affect this project.

2. Toll System Integrator

The Design-Build Team shall coordinate with the Toll System Integrator for design and construction issues and to schedule training of Toll System Integrator personnel.

3. Integration

This project will use and support the *Smartlink* statewide ITS software (by others). Others shall deploy that software in the MRTMC facility. The Design-Build Team will integrate all ITS field devices described herein into *Smartlink* for command and control. The software will integrate with NCDOT's statewide Traveler Information Management System (TIMS). The package will also facilitate center-to-center (C2C) communications between NCDOT's regional TMCs. *Smartlink* will communicate with the devices using NTCIP drivers or via "black box" converters. The Design-Build Team shall closely coordinate with NCDOT's Metrolina and Triangle Regional ITS Engineers regarding all matters of NCDOT's local computing networking and ITS device operations and control.

NCDOT will not provide the software for the Design-Build Team for testing and MIB development. The Design-Build Team shall also be responsible for any MIB development and configuration if the NCDOT STOC does not already have MIBs for the device in question.

4. Metrolina Regional Traffic Management Center

Upon completion the ITS devices will be monitored and controlled locally by NCDOT's Metrolina Regional Transportation Management Center (MRTMC). The project will communicate with the MRTMC through NCDOT's Hub 6 located at the interchange of I-85 and I-485. In Hub 6, furnish and install an Ethernet blade for the Cisco switch. Utilize existing spare NCDOT fiber strands between Garden Parkway and I-85.

Furnish and install in the existing Cisco 6509-E v04 core switch at the MRTMC the following components:

1) Cisco WS-SUP720-3B Catalyst 6500/7600 Supervisor fabric MSFC3B 1, and
2) Cisco MEM-C6K-CPFTL512M Catalyst 6500 Sup 720/Sup 32 Compact Flash 512 MB memory.

The Design-Build Team shall furnish and install an expansion of the existing video processor in the MRTMC. The video processor is a Jupiter Fusion Catalyst 4000. The work shall consist of:

- Expansion chassis with backplane with 16 PCIe v2.0 x4 slots, N+1 hot-swappable power supplies and hot-swappable fans,
- Host board for the Fusion Catalyst 4000 main chassis, expansion board and one meter PCIe extension cable,
- Eight Quad HD Decoder cards with four Gigabit Ethernet ports each. The cards shall support SD and HD video streams up to 1080p and 30 frames per second. The card shall support MPEG-2, MPEG-4 (part 10) and H.264 (L4.1) decoding and be fully compatible with the video encoders supplied with the project.
- Integration services to configure the above equipment with the MRTMC and the STOC software applications. Upon successful integration of the equipment in this project, the MTMC shall be able to monitor and control the ITS devices and view the video images through the Jupiter video processor on the MRTMC's video wall. The STOC also shall be able to monitor and control the ITS devices. The STOC shall also be able to display the video images.

5. Regulations and Codes

Furnish material and workmanship conforming to the *National Electric Code* (NEC), *National Electric Safety Code* (NESC), Underwriters Laboratories (UL), or other listing agencies approved by the North Carolina Department of Insurance, and all local safety codes in effect on the date of advertisement. Comply with Article 4, Chapter 87 of the *North Carolina General Statutes* (Licensing of Electrical Contractors). Comply with all previously referenced specifications, and all applicable local ordinances and regulations before and during all stages of the electrical work.

When required by the local ordinances and governmental agencies, upon completion of the work, have all systems inspected and approved in writing by the authorized governmental electrical inspector for the area. Furnish written certification of the authorized inspector's approval to the Engineer. Inspection by the authorized governmental electrical inspector will neither eliminate nor take the place of the inspections by the Engineer. Upon the Engineer's receipt of written certification and the Design-Build Team's written request for a final inspection of the installations, the Engineer will perform a final inspection.

Where required, conform to AASHTO and ASTM standards in effect on the date of advertisement.

Notify the Engineer, local traffic enforcement agency, local utility company, and affected railroad companies seven business days before operational shutdowns to coordinate connection or disconnection to an existing utility or system.

Install meter bases and service disconnects as required by the NESC, NEC, local utility companies, and local ordinances. Install standoffs only when required and approved by the local utility companies. Where a standoff must be used, obtain the local utility company's approval prior to installing the standoff.

6. Utility Services

Coordinate all work to ensure electrical power of proper voltage, phase, frequency, and ampacity is available to complete the work. Use electrical services cables with THWN insulation.

The Design-Build Team shall provide electrical and telecommunication service as described in this Scope of Work, contact the utility company and make application to ensure all work can be completed. Obtain authorization for service in NCTA's name for NCTA-owned locations. Make application for service in NCTA's name for NCTA-owned locations.

The Design-Build Team will be responsible for all expenses associated with utility installation costs, hookups, etc. Once installed, NCTA will be responsible for monthly utility company usage charges prior to final acceptance.

7. Maintenance and Repair of Material

Ensure that an IMSA certified, or equivalent, Level II traffic qualified technician is standing by to provide emergency maintenance services whenever any electrical work is performed. Standby status is defined as being able to arrive, fully equipped, at the work site within two hours ready to provide maintenance services.

Furnish the Engineer with the name, office telephone number, cellular (mobile) telephone number, and pager number of the supervisory employee who will be responsible for maintenance and repair of equipment during all hours.

Maintain and repair all ITS devices and communications related equipment within the project construction limits until completion of the observation period and receipt of written notification of final acceptance of the project.

For all failures, malfunctions, or damages to equipment, begin necessary repairs within four hours of notification. Complete repairs within eight hours of notification. The inability to contact the supervisory employee or prearranged alternate will not extend repair time requirements.

Remove and replace all ITS devices and communications related equipment that fails.

Except for damages and malfunctions caused by the Design-Build Team's work activities, the Design-Build Team will not be held responsible for pre-existing conditions reported to the Engineer before starting any work at the specific location. The Design-Build Team shall assume responsibility for all maintenance and emergency services necessary once work has begun at an existing device location and for all damages and malfunctions caused either directly or indirectly by the Design-Build Team's work activities.

In the event the Design-Build Team fails to perform in accordance with the Plans and Scope of Work within the time frame specified, NCTA reserves the right to perform maintenance and emergency service necessary to ensure continuous operation. Further, all expenses incurred by NCTA in implementing this option will be deducted from payment due the Design-Build Team, plus $2,500 liquidated damage per occasion, per day, or any portion thereof, until corrected.

Maintain system equipment until the completion of the 60-day observation period and the receipt of written notification from the Engineer of final acceptance of the project.

UNDERGROUND CONDUIT

(A) DESCRIPTION

Furnish and install conduit for underground installation with tracer wire, miscellaneous fittings, all necessary hardware, marker tape, conduit plugs, sealing putty, pull lines, backfill, graded stone, paving materials, and seeding and mulching.

Provide conduit as needed to interconnect the ITS devices and toll facilities.

(B) MATERIALS

1. General

Material, equipment, and hardware furnished under this section shall be pre-approved on the Department's QPL, however, for HDPE and accessories, adhere to "Submittal 'Requirements" found elsewhere in this Scope of Work.

Comply with Article 1091-3 of the *Standard Specifications,* with additional requirements detailed below.

2. Conduit Types

Provide fiberglass (UL 1684) or rigid galvanized steel outerducts for bridge-mounted conduit. The fiberglass conduit must be rated for above-ground use (XW type). Provide expansion fittings for bridge-mounted conduit.

Use moldable sealing putty in occupied conduit, and conduit risers..

3. Mechanical Couplings for HDPE Conduit

Provide mechanical couplings that are both watertight and airtight for joining two segments of HDPE conduit of like diameter in trenched locations. Do not use mechanical couplings for directionally drilled installations. Provide couplings designed to accommodate pneumatic methods of cable installation. Provide couplings suitable for burial underground and that meet the following requirements:

- The coupling shall not fail by leakage when subjected to sustained internal pressure testing as noted in ASTM F 2176
- The coupling shall not fail by leakage when subjected to sustained external pressure testing as noted in ASTM F 2176
- The coupling assemblies tested shall be able to comply with the tensile loading requirements as specified in ASTM F 2176
- As specified in ASTM F 2176, the coupling shall not fail when conditioned at low temperature conditions of 10 degrees F and tested by an impact with a force of 20 ft-lb using Type “B” as described in Test Method ASTM D 2444

(C) CONSTRUCTION METHODS

1. General

Provide a special detail for conduit attachment to bridge for review by NCDOT Structures unit. Show how the transition is made from bridge conduit back to underground conduit, and also show expansion fittings. Show conduit runs between girders, not exposed on outside of bridge.

Install the ITS trunk cable in either the black or orange conduit. Install the Tolls trunk cable in either the blue or white conduit.

Comply with Article 1715-3 of the *Standard Specifications*.

Install a minimum of two 2" conduits for all underground routes that are designated to convey a single 144-fiber communications cable. Install four 2" conduits for all underground routes that are designated to convey a pair of 144-fiber communications cables. Install a minimum of one 2" conduit for underground routes that are designated to convey 6-fiber communications cable.

Install a minimum of two 2" conduits for conveying communication cables, exclusive of conduit needed for power service, for all directional drill installations beneath roadways, railroad rights-of-way, or streams.

Do not exceed 1500 feet between junction boxes in any underground conduit route that conveys communications cable without the prior approval of NCTA.

2. Maximum Length of Directional Drill

The length of a directional drill shall not exceed 1000 feet measured horizontally along the route of the directionally drilled conduit(s), unless otherwise approved by the Engineer. On or before the 1000-foot mark, transition from directional drill to trenching to continue the route up to the maximum spacing of 1500 feet between junction boxes. Alternatively, continue the route by beginning a successive directional drill and installing an over-sized heavy-duty junction box where the two directionally drilled conduit runs meet.

3. Splicing and Coupling of HDPE Conduit

Install a continuous HDPE conduit free from splices or couplings between junction boxes whenever possible. However, splicing or coupling of HDPE conduit may be permitted, subject to the prior approval of NCTA, in the following situations:

- To complete an underground HDPE conduit run when the end of an HDPE reel is reached
- When transitioning from directional drill to trenching or from trenching to directional drill in an underground run while maintaining the same quantity and size of conduits in the run

Join the HDPE conduit ends by installing mechanical couplings in accordance with the manufacturer's instructions or by splicing the conduits using either a butt-fusion welder or an electro-fusion welder. Submit the proposed method of coupling or splicing the conduits to the Engineer for review and approval prior to joining any HDPE conduits.

Otherwise, install an oversized, heavy-duty junction box where the ends of the HDPE conduits meet in lieu of joining the ends through splicing and coupling. Install an oversized, heavy-duty junction box where the number of conduits in the underground run changes. For example, install an oversized, heavy-duty junction box where two directionally drilled conduits meet a single run of trenched conduit.

4. Bore and Jack

Comply with Article 1715-3 of the *Standard Specifications*.

JUNCTION BOXES

(A) DESCRIPTION

Furnish and install junction boxes (pull boxes) with covers, graded stone, grounding systems, and all necessary hardware.

(B) MATERIALS

1. General

Comply with Article 1411-2 of the *Standard Specifications*, except as follows:

- Provide junction box covers with standard NCTA logos, pull slots and stainless steel pins. For standard size junction boxes, provide covers with *NCTA Electrical* logo. Provide covers with *NCTA Fiber Optic* logo on all oversized and special-sized, heavy-duty junction boxes that house fiber-optic communications cable along the project.
- Do not provide sealant compound between junction boxes and covers.
- Material, equipment, and hardware furnished under this section must be pre-approved on the Department's QPL by the date of equipment installation; however, for special-sized heavy-duty junction boxes, loop and custom splice boxes, adhere to "Submittal Requirements" found elsewhere in this Scope of Work.
- Provide an 18" reinforced concrete collar on all junction boxes, unless boxes are on slopes of 3:1 or worse. Avoid placing junction on such slopes wherever possible.
- Provide a special-sized heavy duty junction box at the locations of DMS 1 and DMS 2 in order to splice into the NCDOT 72-fiber cable.
- Provide box drains as shown in the AET Standard Drawings.

2. Standard Sized Junction Boxes

Provide standard sized junction boxes with minimum inside dimensions of 16"(l) x 10"(w) x 10"(d) that meet or exceed the Tier 15 requirements of ANSI/SCTE 77. Provide certification that testing methods are compliant with ANSI/SCTE 77. Vertical extensions of 6" to 12" shall be available from the junction box manufacturer.

3. Oversized Heavy-Duty Junction Boxes

Provide oversized heavy-duty junction boxes and covers with minimum inside dimensions of 30"(l) x 15"(w) x 24"(d) that meet or exceed the Tier 15 requirements of ANSI/SCTE 77. Provide certification that testing methods are compliant with ANSI/SCTE 77.

4. Special-sized, Heavy-Duty Junction Boxes

Provide special-sized heavy-duty junction boxes and covers with minimum inside dimensions of 36"(l) x 24"(w) x 24"(d) that meet or exceed the Tier 15 requirements of

ANSI/SCTE 77. Provide certification that testing methods are compliant with ANSI/SCTE 77.

5. Loop Splice Boxes

Provide loop splice boxes and covers with minimum inside dimensions of 36"(l) x 17"(w) x 30"(d) that meet or exceed the Tier 15 requirements of ANSI/SCTE 77. Provide certification that testing methods are compliant with ANSI/SCTE 77.

6. Custom Splice Boxes

Provide larger boxes for specialized use near AET Toll Zones that meet or exceed the Tier 15 requirements of ANSI/SCTE 77. Provide certification that testing methods are compliant with ANSI/SCTE 77.

(C) CONSTRUCTION METHODS

Comply with Article 1411-3 of the *Standard Specifications*, except as follows:

- Install junction boxes flush with finished grade. Do not install sealant compound between junction boxes and covers.
- Install junction boxes where underground splicing of electrical cable is necessary and where transitioning from below ground to above ground installation or vice-versa.
- Install oversized heavy-duty junction boxes in underground fiber-optic communications cable runs at maximum intervals of 1500 feet for boxes containing fiber-optic cable except those with splice enclosures.
- Install special-sized, heavy-duty junction boxes at all underground fiber-optic splice enclosure locations.
- Install loop splice boxes in AET Toll Zones as shown in the AET Standard Drawings.
- Route the black and orange conduits into the ITS junction box. Route the white and blue conduit into the Tolls junction box.

WOOD POLES

(A) DESCRIPTION

Furnish and install wood poles with grounding systems and all necessary hardware. Wood poles are for the sole purpose of bringing electric service just inside the right of way where it shall transition to underground conduit. The Design-Build team shall not use wood poles for mounting any ITS devices. Comply with Section 1720 of the *Standard Specifications*.

FIBER-OPTIC CABLE

(A) DESCRIPTION

Furnish and install single-mode fiber-optic (SMFO) communications cable and drop cable assemblies with grounding systems, communications cable identification markers, and all

necessary hardware. Provide two 144-strand single-mode fiber-optic cables in separate conduits, one for ITS and one for toll operations.

The exact location of conduit and junction boxes shall be determined by the Design-Build Team. Route the ITS and toll operations fiber-optic cables through AET vaults as indicated in the ITS Special Details. The toll operations cable shall route thru every AET vault. All fiber strands of these cables shall terminate on separate patch panels provided by the Design-Build Team.

Note that tracer wire will be installed by the Garden Parkway West team for all conduit infrastructure in their Scope of Work. The Garden Parkway East team will only be responsible for tracer wire for conduit installed as part of this Scope of Work.

The toll operations cable shall extend no further than the last AET Vault in each direction of the project. The ITS cable shall extend to DMS 9 on I-85, and the nearest existing NCDOT splice box at the I-485/West Blvd. interchange. At this box. splice four fibers for Gigabit communications into four fibers to be determined by NCDOT MRTMC staff. For Fast Ethernet communications for DMS 1 and DMS 2, splice into two fibers to be determined by the MRTMC staff at the point at which the drop cable intercepts the existing cable. At the splice box at I-485 and West Blvd. splice these fibers into the proposed cable for Fast Ethernet communications back to Hub 1.

In the ITS trunk fiber-optic cable, reserve one tube of 12 strands for future use by NCDOT and one tube of 12 strands for future use by NCTA.

The Design-Build Team shall conduct OTDR tests on both the ITS and toll operations fiber-optic cable and correct any defects revealed by the testing. The Toll System Integrator shall energize the Tolls designated cable and connect equipment to it after acceptance.

(B) MATERIALS

1. SMFO Communications Cable

Furnish single-mode fiber-optic communications cable that is pre-approved on the Department's QPL.

Comply with Article 1098-10 of the *Standard Specifications*.

2. Drop Cable Assembly

Furnish drop cable assemblies to provide communications links between splice enclosures and Ethernet edge switches mounted in cabinets. Provide an assembly that is factory pre-assembled and factory pre-tested with the necessary drop cable length. Furnish a drop a cable assembly comprised of the designated length of fiber-optic cable that has been factory pre-terminated on a factory pre-connectorized patch panel with six connectors matching the Ethernet edge and routing switches to form an integral pre-assembled unit. Furnish a drop-cable assembly <u>that requires no field assembly,</u>

connectorization, or termination other than splicing the free end of the drop cable into the fiber-optic trunk cable in a splice enclosure external to the cabinet.

Provide a drop cable assembly with a patch panel in a compact, modular housing or a patch panel housed in low profile, rack-mountable interconnect center. The compact modular patch panel shall have a rugged, durable, non-metallic housing that can be surface-mounted vertically to the face of the 19-inch equipment rack rail inside a cabinet or mounted horizontally within the equipment rack occupying no more than one standard rack unit (1 RU) of space. The dimensions of the patch panel shall not exceed 1.75" (h) x 16.5"(w) x 13.5 " (d). The low-profile interconnect center that houses the patch panel shall be a powder-coated aluminum enclosure designed for mounting horizontally in the 19-inch equipment rack inside a device cabinet and shall occupy no more than one standard rack unit (1 RU) of space.

Provide outdoor-rated, non-armored, riser-rated cable. Provide UV rated cable.

Use single-mode fiber-optic cable that does not exceed attenuation of 0.30 dB/km at 1550 nm and 0.40 dB/km at 1310 nm. Ensure attenuation loss for complete drop cable assembly does not exceed a mean value of 1.5 dB.

Provide metal connector housing, ceramic ferrules and coupler inserts. Provide a connector attenuation of 0.20 dB and a reflectance of /<-55 dB UPC. Use heat-cured epoxy material.

Provide length markings in sequential feet and within one percent of actual cable length. Ensure character height of markings is approximately 0.10".

Furnish SMFO jumpers that are a minimum of 3 feet in length with factory-assembled connectors matching the Ethernet edge and routing switches on each end for connecting Ethernet edge and routing switches to the fiber-optic patch panels on the drop cable assemblies. The Design-Build Team shall provide SMFO jumpers of sufficient length to not strain the fibers within when installed in the final position. The minimum length for all jumpers shall be 3 feet in field cabinets and 6 feet in the AET Vaults. Ensure SMFO jumpers meet the operating characteristics of the SMFO cable with which they are to be coupled.

3. Communications Cable Identification Markers

Comply with Subarticle1098-10(C) of the *Standard Specifications*, with the exception of replacing “NCDOT” on the cable marker with “NCTA".

(C) CONSTRUCTION METHODS

1. General

Comply with Subarticle 1730-3(A) of the *Standard Specifications*.

2. Underground Installation

Comply with Subarticle 1730-3(C) of the *Standard Specifications*.

Use a breakaway swivel so as not to exceed 80% of the maximum allowable pulling tension specified by the cable's manufacturer if cable is pulled by mechanical means.

Store 50 feet of each fiber-optic cable in oversized heavy-duty junction boxes on all cable runs that are continuous without splices. Obtain approval for spare cable storage locations.

3. Installation of Drop Cable Assembly

Determine length of drop cable needed, including slack, to reach from termination point to termination point.

At below ground splice enclosures, coil at least 50 feet of slack cable for each cable entering and exiting the splice enclosure in the junction box where enclosure is located. Coil and store any drop cable in excess of what is needed for storage in the manhole or junction box in the base of the equipment cabinet, however store no more than 100 feet of extra cable.

Mount the patch panel of the drop cable assembly vertically to the surface the rack frame or horizontally within 19-inch equipment rack using the screws, mounting brackets and hardware provided with the drop cable assembly. Mount the patch panel in a location convenient to the Ethernet switch and/or video encoder to facilitate installation of SMFO jumpers between them. Secure drop cable in cabinet using cable ties and cable management hardware.

Install SMFO jumpers between the appropriate connectors on the patch panel of the drop cable assembly and the Ethernet edge switch.

Label all connectors, pigtails, and the connector panel.

Using an OTDR, test the end-to-end connectivity of the drop cable assembly from patch panel installed inside the ITS cabinet to its respective communications hub. Comply with the OTDR testing and reporting requirements of the "Testing and Acceptance" section of this Scope of Work when testing drop cable.

FIBER-OPTIC SPLICE CENTERS

(A) DESCRIPTION

Furnish and install fiber-optic interconnect centers, fiber-optic splice enclosures, and all necessary hardware.

(B) MATERIALS

Material, equipment, and hardware furnished under this section shall be pre-approved on the Department's QPL. Ensure patch panel connectors match connectors for associated switches.

1. Interconnect Center

Furnish compact, modular interconnect centers designed for rack mounting in AET Vaults. Design and size interconnect centers to accommodate all fibers (used and unused) entering the AET vaults.

Comply with Subarticle 1098-11 (A) of the *Standard Specifications*.

2. Splice Enclosure

Comply with Subarticle 1098-11 (C) of the *Standard Specifications*.

(C) CONSTRUCTION METHODS

1. General

Comply with Article 1731-3 of the *Standard Specifications*.

2. Termination and Splicing within Interconnect Center

Install one rack-mounted interconnect center for each trunk cable entering an AET vault in 19-inch communications racks in each AET vault. Coordinate with the Tolls Integrator on the placement of the racks.

Fiber strands shall be either expressed through an interconnect center or terminated on patch panels. For all fibers designated to pass through an interconnect center, neatly coil and express the fibers without cutting. Neatly coil excess tubing inside interconnect center.

Install SMFO jumpers between the appropriate connectors on the interconnect center and the routing switch.

3. Splice Enclosure

Comply with Subarticle 1731-3(E) of the *Standard Specifications*.

Develop a cable-splicing plan to maximize cable performance and minimize the quantity of cable.

Install underground enclosures with 50 feet of slack cable from each trunk cable entering the enclosure to allow enclosure to be taken out of the special sized heavy-duty junction boxes and extended into a splicing vehicle.

For underground, special-sized heavy duty and junction box facility installations, place the enclosure along with required spare cables in the facility in a neat and workmanship like manner. Neatly coil the spare cable in the special-sized heavy-duty junction boxes. In the AET vaults, neatly coil the spare cable and secure with tie wraps to the communications rack or cable trays.

ELECTRICAL SERVICE

(A) DESCRIPTION

Install new electrical service to new ITS cabinets and devices. For ITS devices at AET vaults such as DMS, utilize electrical service in the AET vault. All new electrical services within the NCDOT or NCTA rights of way shall be underground with pedestal-mounted assemblies.

(B) MATERIALS

Material, equipment, and hardware furnished under this section must be pre-approved on the Department's QPL by the date of equipment installation.

Provide UL-listed 1-inch Schedule 80 conduit for underground runs. If electrical conduit shares a trench with fiber-optic conduit, use conduit color other than black, orange, blue or white.

Provide all materials necessary to form a complete electrical service assembly as shown in 2012 *Roadway Standard Drawing* No. 1700.01, "Electrical Service Options".

Provide an external electrical service disconnect at each new ITS device cabinet location. For disconnects for DMS at AET Toll Zones, place electrical panel on same concrete pad with AET Toll Zone equipment. Furnish external electrical service disconnects with a minimum of a single pole 50 ampere circuit breaker with a minimum of 10,000 RMS symmetrical amperes short circuit current rating in a lockable NEMA 3R enclosure. Ensure service disconnects are listed as meeting UL Standard UL-489 and marked as being suitable for use as service equipment. Fabricate enclosure from galvanized steel and electrostatically apply dry powder paint finish, light gray in color, to yield a minimum thickness of 2.4 mils. Provide ground bus and neutral bus with a minimum of four terminals with minimum wire capacity range of number 14 AWG through number 4 AWG.

Furnish NEMA Type 3R meter base rated 200-ampere minimum that meets the requirements of the local utility. Provide meter base with socket's ampere rating based on sockets being wired with minimum of 167 degrees F insulated wire. Furnish four-terminal, 600 volt, single-phase, three-wire meter bases that comply with the following:

- Line, load, and neutral terminals accept #8 to 2/0 AWG copper/aluminum wire
- With or without horn bypass
- Made of galvanized steel
- Listed as meeting UL Standard UL-414
- Underground service entrance

Ensure meter bases have electrostatically applied dry powder paint finish, light gray in color, with minimum thickness of 2.4 mils. Furnish 1" watertight hub for threaded rigid conduit with meter base. For all new ground-mounted electrical service assemblies for underground electrical service, provide a combination panel with pedestal extension. Ensure combination meter and disconnect mounted in a pedestal for underground service is listed as meeting UL Standard UL-231. Do not provide wood posts, steel U-channel posts, square tube sign posts (i.e., Telespar, etc.), Unistrut metal framing, or any method other than an underground service pedestal to mount meter bases and disconnects for new underground electrical service.

(C) CONSTRUCTION METHODS

1. General

All work involving electrical service shall be coordinated with the appropriate electric utility company. Coordinate with the utility company to ascertain the feasibility of installing electrical service at each location before performing any work. Obtain all required local permits before beginning work.

Run service conductors separately from all other conductors in a 1-inch rigid galvanized conduit above ground and Schedule 80 conduit underground. Do not allow service conductors to share conduits or junction boxes with any other conductors or cables, without permission from the Engineer. Do not route unfused electrical service conductors inside of metal poles.

2. New Electrical Service for ITS Devices

Install new electrical service for a device cabinet in accordance with the details. Install a new electrical service comprised of an external service disconnect and a meter base housed in a combination panel. If more than one cabinet is fed from the same utility company service point, a common meter may be utilized with individual disconnects at each device cabinet. The cost of running electrical service to all cabinets will include any transformers required.

Locate all secondary power service points outside the controlled access right of way. Locate combination panels as shown on the ITS Concept Plans. After installation of the meter base, the local power company will install a new meter and make any necessary connections to the power lines.

Have the power company route the service drop underground to the load center, even where source power lines are overhead; wood poles on NCTA right-of-way for power service are generally not permissible with the exception of bringing power just inside the right-of-way.

DEVICE CABINETS

(A) GENERAL

Furnish and install ITS device cabinets to house communications hardware, fiber-optic patch panels, power supplies, cable terminations, and other equipment to support the installation of CCTV, MVDS, DMS, and RWIS devices. See AET Standard Drawings for details of all DMS related cabinet, conduit, box, and foundation work at the AET gantries.

(B) MATERIALS

1. General

Provide device cabinets as follows to house equipment specific to the site where it is installed.

Cabinet Type Designation	Purpose
A	All CCTV and MVDS sites requiring fiber-optic communications
B	Optional "Slave" MVDS site
C	Remote processing unit for RWIS site
D	All DMS signs

Type A cabinets shall be a minimum size of a Type 336 cabinet. Type D cabinets shall be a minimum size of a Type 336S cabinet. For DMS not located on toll gantries, provide concrete pad as per Article 1098-15 and Section 1750 of the *Standard Specifications*. For Type A and Type C cabinets, provide reinforced concrete maintenance pad as per the ITS Standard Details.

Provide cabinets with a serial number unique to the manufacturer. Engrave the entire identification code on a metallic plate that is epoxied to the cabinet on the upper right hand sidewall.

(a) Lighting

Provide two 15-watt fluorescent light strips with shields, one in the top of the cabinet and the other under the bottom shelf. Design both lights to automatically turn on when the cabinet door is opened and turn off when the door closes.

(b) Convenience Outlets

Provide a 120V (+/-10%) GFCI duplex receptacle of the 3-wire grounding type in the cabinet in a location that presents no electrical hazard when used by service personnel for the operation of power tools and work lights. Provide at least one surge protected 120V (+/-10%) GFCI duplex receptacle of the 3-wire grounding type in the cabinet.

(c) Circuit Protection

Protect the CCTV controller, accessories, and cabinet utilities with thermal magnetic circuit breakers. Provide the controller cabinet with a main circuit breaker sized according to the NEC. Use appropriately sized branch circuit breakers to protect and service CCTV equipment and cabinet utilities.

2. Type A

Furnish and install pole-mounted cabinets to house CCTV related equipment described herein. Provide the cabinets with 19-inch communications rack for all equipment. It is the Design-Build Team's responsibility to size the cabinet appropriate to fit all the equipment installed within the cabinet at the particular location.

Furnish, at a minimum, Type 336 CCTV cabinets meeting the following minimum requirements as applicable to the specific installation:

- Pole mounting brackets
- Grounding bus bar
- 120 VAC power supply
- 120 VAC GFCI-protected duplex outlets for tools
- 120 VAC SPD-protected duplex outlets for equipment
- SPD lightning and surge protection on incoming and outgoing electrical lines (power and data)
- 19-inch rack system for mounting of all devices in the cabinet
- Pull-out shelf for laptop and maintenance use
- Fluorescent lighting
- Two ventilation fans with independent thermostat controls
- Power strip along vertical rail
- Termination of the composite cable to the camera
- Fiber-optic interconnect center
- Maintenance access points for data and video connections to observe camera images and program/monitor camera status
- Video encoder
- Ethernet edge switch

Provide cabinets complete with a prefabricated cabinet shell, and all internal components and equipment, back and side panels, front and back doors, terminal strips, cabling and harnesses, surge protection for power and communication circuits, power distribution blocks or assemblies, shelves, connectors and all mounting hardware necessary for installation of equipment.

Construct the cabinets using unpainted sheet aluminum with a minimum thickness of 0.125 inch.

Provide the rack assembly with a removable, standard 19-inch EIA compliant rack. Equip each cabinet with an aluminum storage compartment mounted in the rack assembly with the following dimensions (±0.5 inch): 16 inches wide, 14 inches long,

and 1.75 inches deep. Provide the compartment with a ball bearing telescoping drawer guides to allow full extension from the rack assembly. The storage compartment shall open to provide a full-depth storage space for cabinet documentation and other miscellaneous items. The storage compartment shall be of adequate construction to support a weight of 20 pounds when extended without sagging. The top of the storage compartment shall be hinged aluminum. Provide at least one removable metal full-depth shelf with each cabinet.

Doorstops shall be included at 90 and 180-degree positions. Provide both the door and the doorstop mechanism of sufficient strength to withstand a simulated wind load of five pounds per square foot of door area applied to the both inside and outside surfaces without failure, permanent deformation, or compromising of door position and normal operation. Provide the cabinets without auxiliary police doors.

Ensure that cabinet doors include a gasket to provide a dust and weather-resistant seal when closed. Provide the gasket material with closed-cell neoprene and shall maintain its resiliency after exposure to the outdoor environment. The gasket shall show no sign of rolling or sagging, and shall ensure a uniform dust and weather-resistant seal around the entire door facing.

Ventilation: Provide all cabinets with a 100 CFM, minimum, cooling fan capacity. Provide dual fans with thermostats incorporated into the ventilation system.

Provide the cabinets with vent openings in the doors to allow convection cooling of electronic components. Locate the vent opening on the lower portion of the cabinet doors and shall be covered fully on the inside with a commercially available disposable three layer graded type filter.

Electrical

Provide AC isolation within the cabinet. Configure all cabinets to accept 120 VAC from the utility company.

Provide UL listed circuit breakers with an interrupt capacity of 5,000 amperes and insulation resistance of 100 MΩ at 500 VDC. Provide power distributions blocks for use as power feed and junction points for two and three wire circuits. The line side of each shall be capable of handling up to 2/0 AWG conductors. Isolate the AC neutral and equipment ground wiring and terminal blocks from the line wiring by an insulation resistance of at least 10 MΩ when measured at the AC neutral.

3. Type B

Furnish and install pole-mounted Type 5052-H32 aluminum NEMA 3R cabinets to house MVDS related equipment described herein. Type B cabinets may be used when the MVDS unit does not contain a 120 VAC power service drop and fiber-optic drop cable. It is the ITS Design Build Team's responsibility to size the cabinet appropriately to fit all the equipment installed within the cabinet at the particular location.

4. Type C

Furnish and install pole-mounted Type 5052-H32 aluminum NEMA 4 cabinets to house RWIS related equipment described herein. It is the Design-Build Team's responsibility to size the cabinet appropriate to fit all the equipment installed within the cabinet at the particular location.

Furnish cabinets meeting the following minimum requirements:

- RWIS structure mounting brackets,
- Grounding bus bar,
- 120 VAC power supply,
- 120 VAC GFCI-protected duplex outlets for tools,
- 120 VAC SPD-protected duplex outlets for equipment,
- Communications cabling to ITS network,
- Termination of the cables to the weather sensors,
- Maintenance access points for data connections to check data and program/monitor RWIS status.

Provide cabinets complete with a prefabricated cabinet shell, and all internal components and equipment, back and side panels, single door, terminal strips, cabling and harnesses, surge protection for power and communication circuits, power distribution blocks or assemblies, shelf, connectors and all mounting hardware necessary for installation of equipment.

Construct the cabinets using unpainted sheet aluminum with a minimum thickness of 0.125 inches.

Provide all cabinets and door exterior seams with smooth and continuous welds. Provide all cabinets with a single full-size door. Provide the door with three hinges, or a full-length stainless steel piano hinge, with stainless steel pins spot-welded at the top. Mount the hinges so that they cannot be removed from the door or cabinet without first opening the door. Brace the door and hinges to withstand a 100-pound per vertical foot of door height load applied vertically to the outer edge of the door when standing open. There shall be no permanent deformation or impairment of any part of the door or cabinet body when the load is removed. Provide the cabinet door with padlock hasp. Provide two keys for each cabinet. Provide door openings with double flanges on all four sides.

Provide both the door of sufficient strength to withstand a simulated wind load of five pounds per square foot of door area applied to the both inside and outside surfaces without failure, permanent deformation, or compromising of door position and normal operation. Provide the cabinets without auxiliary police doors.

Ensure that cabinet doors include a gasket to provide a dust and weather-resistant seal when closed. Provide the gasket material with closed-cell neoprene and shall maintain its resiliency after exposure to the outdoor environment. The gasket shall show no sign

of rolling or sagging, and shall ensure a uniform dust and weather-resistant seal around the entire door facing.

Provide mounting hardware to mount the cabinet to the tower according to the manufacturer's recommendations.

Electrical

Provide AC isolation within the cabinet. Configure all cabinets to accept 120 VAC from the utility company.

Provide UL listed circuit breakers with an interrupt capacity of 5,000 amperes and insulation resistance of 100 MΩ at 500 VDC. Provide power distributions blocks for use as power feed and junction points for two and three wire circuits. The line side of each shall be capable of handling up to 2/0 AWG conductors. Isolate the AC neutral, equipment ground wiring, and terminal blocks from the line wiring by an insulation resistance of at least 10 MΩ when measured at the AC neutral.

5. Type D

(a) General

Furnish the DMS controller ground mounted cabinet with, but not limited to, the following:

- Cabinet anchor bolts
- Base adaptor
- Grounding bus bar
- 120 VAC power supply and distribution assembly
- 120 VAC GFCI-protected duplex outlets for tools
- 120 VAC SPD-protected duplex outlets for equipment
- 19-inch rack system for mounting of all devices in the cabinet
- Pull-out shelf for laptop and maintenance use
- Power line filtering hybrid surge protectors
- Radio interference suppressor
- Fiber-optic interconnect center
- Communications surge protection devices
- Industrial-grade telephone line surge and lightning protector
- Adjustable shelves as required for components
- Interior fluorescent lighting and duplex receptacle
- Ventilation fans
- Temperature control system
- Industrial-grade UPS system and local disconnect
- Local user interface
- Serial interface port for local laptop computer
- Display driver and control system (unless integral to the DMS)
- Microprocessor based controller
- Ethernet edge switch,

- 12" base extender
- All interconnect harnesses, connectors, and terminal blocks
- All necessary installation and mounting hardware

(b) Cabinet Shell

Furnish the DMS controller and associated equipment completely housed in a NEMA 3R cabinet made from 5052-H32 sheet aluminum at least .125-inch thick. Use natural aluminum cabinets. Perform all welding of aluminum and aluminum alloys in accordance with the latest edition of AWS D1.2, Structural Welding Code - Aluminum. Continuously weld the seams using Gas Metal Arc Welding (GMAW).

Slant the cabinet roof from the front to the back of the cabinet to prevent water from collecting on it.

Do not place a manufacturer name, logo, or other information on the faces of the controller cabinet visible to the motorist.

Provide cabinets capable of housing the components and sized to fit space requirements. Design the cabinet layout for ease of maintenance and operation, with all components easily accessible. Submit a cabinet layout plan for approval by the Engineer.

Locate louvered vents with filters in the cabinet to direct airflow over the controller and auxiliary equipment, and in a manner that prevents rain from entering the cabinet. Fit the inside of the cabinet, directly behind the vents, with a replaceable, standard-size, commercially available air filter of sufficient size to cover the entire vented area.

Provide a torsionally rigid door with a continuous stainless steel hinge on the side that permits complete access to the cabinet interior. Provide a gasket as a permanent and weather resistant seal at the cabinet door and at the edges of the fan / exhaust openings. Use a non-absorbent gasket material that will maintain its resiliency after long-term exposure to the outdoor environment. Construct the doors so that they fit firmly and evenly against the gasket material when closed. Provide the cabinet door with louvered vents near the bottom, and with air filters as described in the paragraph above.

Provide a Plexiglas rack of appropriate size at a convenient location on the inside of the door to store the cabinet wiring diagrams and other related cabinet drawings. Provide a Corbin #2 main door lock made of non-ferrous or stainless steel material. Key all locks on the project alike, and provide 10 keys to the Engineer. In addition, design the handle to permit padlocking.

Provide a bug-proof and weatherproof thermostatically controlled fan and safety shield in the top of the cabinet. Size the fan to provide at least for two air exchanges per minute. Fuse the fan at 125% of the capacity of the motor. The

magnetic field of the fan motor must not affect the performance of the control equipment. Use a fan thermostat that is manually adjustable to turn on between 80°F and 160°F with a differential of not more than 10°F between automatic turn-on and turn-off. Mount it in an easily accessible location, but not within 6 inches of the fan.

Install additional fans and/or heaters as needed to maintain the temperature inside the cabinet within the operating temperature range of the equipment within the cabinet as recommended by equipment manufacturer(s).

(c) Electrical System and Wiring

The requirements stated herein shall apply for any DMS controller cabinet. Neatly arrange and secure the wiring inside the cabinet. Where cable wires are clamped to the walls of the control cabinet, provide clamps made of nylon, metal, plastic with rubber or neoprene protectors, or similar. Lace and jacket all harnesses, or tie them with nylon tie wraps spaced at 6 inches maximum to prevent separation of the individual conductors.

All conductors shall be individually and uniquely labeled. All conductor labels shall be clearly visible without moving the conductor. All terminal conductors shall connect to the terminal strip in right angles. Excess conductor shall be removed before termination of the conductor. The conductor shall be molded in such a fashion as to retain its relative position to the terminal strip if removed from the strip. No conductor shall run across a work surface with the exception of connecting to that work surface. No conductor bundles can be supported by fasteners that support work surfaces. All connectors, devices, and conductors shall be installed in accordance to manufactures guidelines. All wiring shall comply with the latest NEC guideline in effect during installation. No conductor or conductor bundle may hang loose or create a snag hazard. All conductors shall be protected from damage. All solder joints shall be completed using industry accepted practices and shall not fail due to vibration or movement. All welds must be in a manner that will not fail due to vibration. Lamps and control boards shall be protected from damage.

Insulate all conductors and live terminals so they are not hazardous to maintenance personnel.

Route and bundle all wiring containing line voltage AC and / or shield it from all low voltage control circuits. Install safety covers to prevent accidental contact with all live AC terminals located inside the cabinet.

Use industry standard, keyed type connectors with a retaining feature for connections to the Controller.

Label all equipment and equipment controls clearly.

Supply each cabinet with one complete set of wiring diagrams that identify the color-coding or wire tagging used in all connections. Furnish a water-resistant packet adequate for storing wiring diagrams, operating instructions, and maintenance manuals with each cabinet.

i. Power Supply

Provide AC isolation within the cabinet. Configure all cabinets to accept 120 VAC from the utility company.

Provide UL listed circuit breakers with an interrupt capacity of 5,000 amperes and insulation resistance of 100 MΩ at 500 VDC. Provide power distributions blocks for use as power feed and junction points for two and three wire circuits. The line side of each shall be capable of handling up to 2/0 AWG conductors. Isolate the AC neutral, equipment ground wiring, and terminal blocks from the line wiring by an insulation resistance of at least 10 MΩ when measured at the AC neutral.

Provide power supply monitoring circuitry to detect power failure and to automatically report the occurrence to the control software.

Blackout, brownout, hunting, line noise, chronic over-voltage, sag, spike, surge, and transient effects are considered typical AC voltage defects. Protect the DMS system equipment so that these defects do not damage the DMS equipment or interrupt their operation. Equip all cabinets with devices to protect the equipment in the cabinet from damage due to lightning and external circuit power and current surges.

ii. Surge Suppression

Install and clearly label filtering hybrid power line surge protectors on the load side of the branch circuit breakers in a manner that permits easy servicing. Ground and electrically bond the surge protector to the cabinet within two inches. The surge suppression shall meet UL 1449.

Electrical Power

Provide power line surge protector that meets the following requirements:

Peak surge current occurrences	20 minimum
Peak surge current for an 8 x 20 microsecond wave shape	50,000 amperes
Energy absorption	> 500 Joules
Clamp voltage	240 volts
Response time	<1 nanosecond
Minimum current for filtered output	15 amperes for 120VAC*
Temperature range	-40 degrees F to +140 degrees F

*Capable of handling the continuous current to the equipment

Radio Interference Suppressor

Provide each controller cabinet with sufficient electrical and electronic noise suppression to enable all equipment in it to function properly. Provide one or more radio interference suppressors (RIS) connected between the stages of the power line surge suppressor that minimize interference generated in the cabinet in both the broadcast and the aircraft frequencies. Each RIS must provide a minimum attenuation of 50 decibels over a frequency range of 200 KHz to 75 MHz. Clearly label the suppressor(s) and size them at least at the rated current of the main circuit breaker but not less than 50 amperes.

Provide RIS that are hermetically sealed in a substantial metal case, which is filled with a suitable insulating compound, and have nickel plated 10/24 brass stud terminals of sufficient external length to provide space to connect #8 AWG wires. Mount them so that the studs cannot be turned in the case. Properly insulate ungrounded terminals from each other, and maintain a surface linkage distance of not less than ¼" between any exposed current conductor and any other metallic parts. The terminals must have an insulation factor of 100-200 MΩ, dependent on external circuit conditions. Use RIS designed for 120 VAC ± 10%, 60Hz, and which meet the standards of UL and the Radio Manufacturers Association.

Communications Surge Protector

Equip the cabinet with properly labeled hybrid data line surge protectors that meet the following general requirements:

Surge current occurrences at 2000 ampere, 8 x 20 microsecond waveform	> 80
Surge current occurrences at 400 ampere, 10x700 microsecond waveform	> 80
Peak surge current for 8 x 20 microsecond waveform	10,000 A (2500 A/line)
Peak surge current for 10x700 microsecond waveform	500 A/line
Response time	< 1 nanosecond
Series resistance	< 15 Ω
Average capacitance	1500 pF
Temperature range	-10 degrees F to 150 degrees F
Clamp Voltage	As required to match equipment in application

Lightning Arrester

Protect the system with an UL-approved lightning arrester installed at the main service disconnect. It shall meet the following requirements:

Type of design	Silicon Oxide Varistor
Voltage	120/240 Single phase, 3 wires
Maximum current	100,000 amps
Maximum energy	3000 joules per pole
Maximum number of surges	Unlimited
Response time one milliamp test	5 nanoseconds
Response time to clamp 10,000 amps	10 nanoseconds
Response time to clamp 50,000 amps	25 nanoseconds
Leak current at double the rated voltage	None
Ground Wire	Separate

iii. Uninterruptible Power Supply (UPS)

Provide the cabinet with an industrial grade power conditioning UPS unit to supply continuous power to operate the equipment connected to it if the primary power fails. The UPS must detect a power failure and provide backup power within 20 milliseconds. Transition to the UPS source from primary power must not cause loss of data or damage to the equipment being supplied with backup power. Provide an UPS with at least three outlets for supplying conditioned AC voltage to the DMS controller and Ethernet switch. Provide a unit to meet the following requirements:

Input Voltage Range	120VAC +12%, -25%
Power Rating	1000 VA, 700 Watts
Input Frequency	45 to 65 Hz
Input Current	7.2A
Output Voltage	120VAC +/- 3%
Output Frequency	50/60 +/-1 Hz
Output Current	8.3A
Output Crest Factor Ration	@50% Load Up to 4.8:1, @75% Load Up to 3.2:1, and @100% Load Up to 2.4:1
Output THD	3% Max. (Linear) and 5% Max. (Non-Linear)
Output Overload	110% for 10 min; 200% for 0.05 sec.
Output Dynamic Response	+/- 4% for 100% Step Load Change and 0.5 ms Recovery Time

Output Efficiency @ 100% Load	90% (Normal Mode)
Operating Temperature	-40 degrees F to +165 degrees F
Humidity	0% to 95% Non-condensing
Remote Monitoring Interface	RS-232 or Ethernet
Protection	Input/output Short Circuit, Input/output Overload and Excessive Battery Discharge
Specifications	UL1778, FCC Class A, IEEE 587

Provide the UPS unit capable of supplying 30 minutes of continuous backup power to the equipment connected to it when this equipment is operating at full load.

(d) Local User Interface

Provide the controller with a Local User Interface (LUI) for at least the following functions:

- On / Off Switch: controls power to the controller.
- Control Mode Switch: for setting the controller operation mode to either remote or local mode.
- LCD Display and Keypad: Allow user to navigate through the controller menu for configuration (display, communications parameter, etc.) running diagnostics, viewing peripherals status, message creation, message preview, message activation, etc. Furnish a LCD display with a minimum size of 240x64 dots with LED back light.

(C) CONSTRUCTION METHODS

1. General

Ground all cabinets in accordance with the requirements of this Scope of Work. Keep the ground wire from the cabinet ground bus bar to the ground rod assembly or array as short as possible. Ensure the ground wire is not in contact with any other part of the cabinet.

Tag and identify all cabinet wiring by the use of insulated pre-printed sleeves. The wire markers shall identify in plain words with sufficient details without abbreviations or codes.

Neatly arrange all wiring, firmly lace or bundle it, and mechanically secure the wiring without the use of adhesive fasteners. Route and secure all wiring and cabling to avoid sharp edges and to avoid conflicts with other equipment or cabling. Terminate all wiring on a terminal block, strip, bus bar, device clamp, lug; or connector, do not splice any wiring. Label all wiring, cables, terminal strips, and distribution blocks. Provide

strain relief for all cabling with connectors, all cabling entering knockouts or ports at the equipment, and where appropriate.

Fasten all components of the cabinet assembly to be mounted on cabinet side panels with hex-head or Phillips-head machine screws. Install the screws into tapped and threaded holes in the panels. The components include, but are not limited to, terminal blocks; bus bars, panel, and socket mounted SPD, circuit breakers, accessory and equipment outlets, and DC power supply chassis.

Fasten all other cabinet components with hex-head or Phillips-head machine screws installed with nuts (with locking washer or insert) or into tapped and threaded holes. Fasten stud-mounted components to a mounting bracket providing complete access to the studs and mounting nuts. All fastener heads and nuts (when used) shall be fully accessible within a complete cabinet assembly, and any component shall be removable without requiring removal of other components, panels or mounting rails. Do not use self-tapping or self-threading fasteners.

Provide cabinets with all mounting plates, anchor bolts, and any other necessary mounting hardware in accordance with these Scope of Work and the project plans.

Seal all unused conduit installed in cabinets at both ends to prevent water and dirt from entering the conduit and cabinet with approved sealing material.

Install a ground bushing attached inside the cabinet on all metal conduits entering the cabinet. Connect these ground bushings to the cabinet ground bus.

Ground the cabinet per Sections 1098 and 1700 of the *Standard Specifications*, applicable addenda, the ITS Concept Plans and this Scope of Work. Provide grounding circuits that are permanent and electrically continuous with a current carrying capacity high enough and an impedance low enough to limit the potential above ground to a safe level.

Run the power company neutral, conduit grounds, and all equipment grounds directly and independently off the ground bus. Use ground clamps, grounding and bonding bushings, lock nuts, and grounding electrodes that comply with UL Standard Electric Grounding and Bonding Equipment. Use ground rods of 5/8 inch minimum diameter, 10 feet long, and made of copper clad steel.

Make connections between ground electrodes and the ground wire using an exothermic welding process, cadweld, or equivalent.

Ensure completed cabinet grounds have a resistance to ground of not more than 20 Ohms.

Each cabinet shall be ISO 9001 certified at the time of bid letting.

Equip the cabinets with SPD lightning and surge protection described separately in this Scope of Work.

Mount the fiber-optic drop cable assembly patch panel in accordance with the "Fiber-Optic Communications Cable" section of this Scope of Work. Install the Ethernet edge switch inside the cabinet in accordance with the "Communications Hardware" section of this Scope of Work. Connect the appropriate connectors on the drop cable patch panel with those on the Ethernet edge switch using SMFO jumpers.

2. Type A

Mount the CCTV/MVDS cabinets on the metal pole using stainless steel bands as shown in the ITS Concept Plans. Attach all risers to the base of pole-mounted cabinet as shown in the ITS Concept Plans.

The CCTV camera cabinet will be interconnected to CCTV camera assembly using a composite cable carrying the video, serial data and power. Terminal strips shall be provided to support 4-wire EIA 422 communications and the 24 VAC power as will be required for power and data. The terminal strips shall be accessible such that it shall not be necessary to remove any other components to gain access. The terminal shall secure conductors by means of nickel or cadmium plated brass binder head screws.

Configure the cabinets with an interface panel to allow maintenance access for both video and data channels. This access should provide a means to connect analog video and control data channels to a laptop computer. The connection of the laptop computer to video and data feeds shall not require disassembly or removal of any of the equipment or other components located inside the cabinet with the exception of patch cords for the data and video feeds.

Provide a video splitter to provide to the video encoder and the video monitor port simultaneously. The video cables shall interface with the CCTV camera cabinet test point connection and be fitted for interconnection to a BNC receptacle.

Provide a switch for selecting and local camera PTZ control. Provide a communication cable for connection to a typical laptop and video board or monitor for future maintenance activities. The data cable shall consist of an integral USB to RS-232/422 converter as required to support the CCTV camera protocol and shall be compatible with the CCTV camera assembly. The data cable shall plug into the test point connector as provided in the cabinet and into a typical laptop USB data port. Two sets of cables shall be provided, two for data and two for video

Mount the digital video encoder in the 19" equipment rack inside the cabinet in accordance with the "Central Video Equipment" section of this Scope of Work.

3. Type C

It is desirable to locate the cabinet at least 100 feet from the roadway to minimize water spray on the cabinet. Mount the cabinet for the RWIS site on the tower supporting the sensors. The cabinet should be at least as high or higher as the edge of the adjacent roadway, if local conditions permit. Install the cabinet and all cabling per the manufacturer's recommended procedures.

Install only rigid metal conduit risers into the cabinet.

Provide one key-operated, pin tumbler, dead bolt padlock, with brass or bronze shackle and case, conforming to Military Specification MIL-P-17802E (Grade I, Class 2, Size 2, Style A) for each electrical panel and switch on the project. Key all padlocks alike, and provide 10 keys to the Engineer.

Provide a switch for selecting and local camera RWIS control. Provide a communication cable for connection to a typical laptop for future maintenance activities. The data cable shall consist of an integral USB to RS-232/422 converter as required to support the RWIS protocol and shall be compatible with the RWIS RPU. The data cable shall plug into the test point connector as provided in the cabinet and into a typical laptop USB data port. Two sets of data cables shall be provided.

4. Type D

Provide the interior of the cabinet with ample space for housing the controller and all associated equipment and wiring; use no more than 75% of the useable space in the cabinet. Provide ample space in the bottom of the cabinet for the entrance and exit of all power, communications, and grounding conductors and conduit.

Arrange the equipment to permit easy installation of the cabling through the conduit so that they will not interfere with the operation, inspection, or maintenance of the unit. Provide adjustable metal shelves, brackets, or other support for the controller unit and auxiliary equipment. Leave a 3-inch minimum clearance from the bottom of the cabinet to all equipment, terminals, and bus bars.

<u>No cabinet resident equipment shall utilize the GFCI receptacle. There shall be one spare non-GFCI receptacle for future addition of equipment.</u>

METAL CCTV AND MVDS POLES

(A) GENERAL

Furnish and install new metal CCTV and MVDS poles, grounding systems, and all necessary hardware. The work covered by this special provision includes requirements for the design, fabrication, and installation of custom/site specifically designed CCTV and MVDS poles and associated foundations. The Design-Build Team may use CCTV poles with or without lowering devices but shall not compromise the camera viewing requirements described in this scope of work. The minimum CCTV mounting height shall be 45’ above the adjacent roadway whether it is the mainline, ramp or crossing roadway, whichever is higher. The minimum mounting height and resultant pole length of the MVDS above the roadway edge of pavement shall be established by the manufacturer’s recommended guidelines. For cases where the pole location is well above the grade of the roadway, a shorter pole will be allowed if the Design-Build Team documents there will be no loss of functionality or sight distance.

The Design-Build Team may use NCDOT's standard strain poles and foundations for the CCTV and MVDS poles or they may custom design the poles and foundations used the design procedures described in this scope of work. Screw, auger, or helix pole foundations shall not be used for CCTV poles.

Provide metal CCTV and MVDS poles that contain no guy assemblies, struts, or stay braces. Provide designs of completed assemblies with hardware that equals or exceeds the requirements of the 5th Edition of the 2009 AASHTO "Standard Specifications for Structural Supports for Highway Signs, Luminaires, and Traffic Signals", including the latest interim specifications. Provide assemblies with a round cross-sectional design.

Ensure that materials and construction are in accordance with Section 10 of the "Project Special Provisions for Signals and Intelligent Transportation Systems". Ignore references to mast-arm poles and traffic signal related equipment. Replace references to "Contractor" with "Design-Build Team". Replace references to "signal poles" with "CCTV and MVDS poles". Replace references to "Department" with "NCTA".

(B) MATERIALS

1. General

Furnish poles and foundations that meet or exceed the following functional requirements with all CCTV and/or MVDS units, power meter, service disconnect, and all equipment cabinets attached and all risers, condulets, and weather head accessories in place:

- Maximum deflection at top of pole in 30 mph, non-gusting wind: one inch
- Ultimate load: 100 mph wind with a 30% gust factor

Furnish poles and foundations that sustain the dead load of all equipment attached to the pole with a safety factor of 1.65.

Furnish MVDS poles that when erected in foundation and completely installed are at a minimum height as recommended by the MVDS manufacturer.

2. Metal Pole

Design poles according to the ITS Concept Plans.

Furnish hot-dipped galvanized steel poles to mount CCTV/MVDS units and equipment cabinets that meet or exceed the requirements of the NCDOT *Standard Specifications* unless otherwise noted in the ITS Concept Plans or this Scope of Work.

Furnish CCTV poles with ½-inch diameter air terminal, with #4 AWG wire, routed down pole and attached to cabinet equipment grounding system. Furnish an air terminal that extends high enough to provide a 45 degree cone of protection of the camera, as shown in the ITS Concept Plans.

Provide materials in accordance with Section 10.2 of the "Project Special Provisions for Signals and Intelligent Transportation Systems".

3. Foundation

Prepare a design for the pole's concrete foundation and submit to the Engineer for review. The top of the drilled shaft foundation shall be flush with finished grade. Unstable soil may require a deeper foundation. Concrete for the foundation shall be 3000 psi minimum. Foundation design shall meet all NCDOT requirements and be prepared and sealed by a North Carolina registered professional engineer. Prepare design, optional custom design and perform soil tests for each CCTV metal pole foundation location in accordance with Section 10.4.B of the "Project Special Provisions for Signals and Intelligent Transportation Systems".

Conduit elbows in foundation shall have a minimum radius of 15 inches.

4. Camera Lowering Device

If the Design-Build Team chooses to use a camera lowering device, provide them on a steel pole as shown in the ITS Concept Plans. Consider the lowering device and pole as two interdependent components of a single unit, and provide them together to ensure compatibility of the pole and lowering device.

(a) Pole

Use a pole as shown in the ITS Concept Plans that meets the requirements of this section of this Scope of Work. The lowering mechanism and cabling shall be internal to the pole. Provide the pole with a 1.25" PVC conduit inside to house the composite camera cable. This conduit separates the cable from the winch cable. Use a pole that is equipped with a hand hole of sufficient size to provide access to the pole interior and for temporarily securing and operating the lowering tool. Ensure that the pole-top tenon is rotatable through 360 degrees. Equip the mounting plates with holes and slots to lock the plate and arm to the pole with bolts.

(b) Lowering Device

Use a lowering device as shown in the ITS Concept Plans. Ensure that the lowering device provides the electrical connections between the control cabinet and the equipment installed on the lowering device without reducing the function or effectiveness of the equipment installed on the lowering device or degrading the overall system in any way. Ensure that the only cable in motion when operating the lowering device is the stainless steel lowering cable contained within the pole. Ensure that the lowering device includes a disconnect unit for electrically connecting the equipment installed on the lowering device's equipment connection box to the power, data, and video cables (as applicable); a divided support arm, a pole adapter for the assembly's attachment to the rotatable pole-top tenon, and a pole-top junction box, as shown in the ITS Concept Plans.

Ensure that all of the lowering device's external components are made of corrosion-resistant materials that are powder-coated, galvanized, or otherwise protected from the environment by industry-accepted coatings that withstand exposure to a corrosive environment.

(c) Equipment Connection Box

Provide an equipment connection box for connecting the CCTV camera to the lowering device. Ensure that the equipment connection box is watertight and able to seal the interior from moisture and dust.

The equipment connection box shall be of two-piece clamshell design with one hinge side and one latch side to facilitate easy opening. The equipment connection box shall be cast aluminum with the stabilizing weights on the outside of the box to increase room on the interior. The box shall be capable of having up to 40 pounds of stabilizing weights. The bottom of the equipment connection box shall be drilled and tapped with a 1-1/2" NPT thread to accept industry standard dome housings and modifiable to accept a wide variety of other camera mountings. The junction box shall be gasketed to prevent water intrusion. The bottom of the box shall incorporate a screened and vented hole to allow airflow and reduce internal condensation. Furnish the camera with an epoxy sealed connection flange at the point of connection of the dome to the equipment connection box to ensure that there is no moisture migration from the equipment connection box into the camera housing.

(d) Disconnect Unit

The disconnect unit shall have a load capacity 600 lbs. with a 4 to 1 safety factor. There shall be a locking mechanism between the fixed and moveable components of the lowering device. The movable assembly shall have a minimum of two latches. This latching mechanism shall securely hold the device and its mounted equipment. The latching mechanism shall operate by alternately raising and lowering the assembly using the winch and lowering cable. When latched, all weight shall be removed from the lowering cable. The fixed unit shall have a heavy duty cast tracking guide and means to allow latching in the same position each time. The contact unit housing shall be weatherproof with a gasket provided to seal the interior from dust and moisture.

The prefabricated components of the lift unit support system shall be designed to preclude the lifting cable from contacting the power or video cabling. This adapter shall have an interface to allow the connection of a contractor provided 1.25 inch PVC conduit and be located just below the cable stop block at the back of the lowering device. The D-B Team shall supply internal conduit in the pole. The only cable permitted to move within the pole or lowering device during lowering or raising shall be the stainless steel lowering cable. All other cables must remain stable and secure during lowering and raising operations.

(e) Connector Block

Provide a connector block as shown in the ITS Concept Plans and directed by the Engineer. Provide modular, self-aligning, and self-adjusting female and male socket contact halves in the connector block. Provide a minimum of fourteen, including two spare contacts, and a maximum of 20 contacts. Provide contact connections between the fixed and movable lowering device components that are capable of passing EIA-232, EIA-422, EIA-485, and Ethernet data signals and 1 volt peak to peak (Vp-p) video signals, as well as 120 VAC, 9-24 VAC, and 9-48 VDC power. Ensure that lowering device connections are capable of carrying the signals, voltages, and current required by the device(s) connected to them under full load conditions.

The current carrying male contacts shall be 1/8 inches outside diameter. The current carrying female contacts shall be 1/8 inches I.D. Provide two male contacts that are longer than the other contacts to mate first and break last, providing optimum grounding performance.

All of the contacts shall be recessed 1/8” from the face of the connector. Cored holes in the rubber measuring 1/4” in diameter and 1/8” deep molded into the connector body are centered on each contact on the face of the connector to create rain-tight seals when mated with the male connector.

The female and male socket contact halves of the connector block shall be constructed of thermosetting synthetic rubber which meets all requirements for UL-94 VO rating. Permanently mold the wire leads from both the male and female contacts in a body of heavy-duty molded synthetic rubber, chlorosulfonated polyethylene, or an approved equal. The female brass socket contacts and the male high conductivity brass pin contacts shall be permanently molded into the synthetic rubber body.

The wire leads from both the male and female contacts shall be permanently and integrally molded in the synthetic rubber body. The current carrying and signal wires molded to the connector body shall be constructed of #18/1 AWG Hypalon jacketed wire.

All electrical and video coaxial connections between the fixed and lowerable portion of the connector block shall be protected from exposure to the weather by a waterproof seal to prevent degradation of the electrical contacts. The electrical connections between the fixed and movable lowering device components shall be designed to conduct high frequency data bits and one volt peak-to-peak video signals as well as the power requirements for operation of dome environmental controls.

(f) Lowering Tool

Provide a metal-frame lowering tool with winch assembly and a cable with a combined weight less than 35 pounds, a quick release cable connector, and an

adjustable safety clutch. Ensure that the lowering tool can be powered using a half-inch chuck, variable-speed reversible industrial-duty electric drill to match the manufacturer-recommended revolutions per minute, or supply a drill motor for the lowering tool.

Ensure that the lowering tool supports itself and the load. Ensure that the lowering tool is equipped with a positive braking mechanism to secure the cable reel during raising and lowering operations, and to prevent freewheeling.

Use a lowering tool equipped with gearing that reduces the manual effort required to operate the lifting handle to raise and lower a capacity load. Provide the lowering tool with an adapter for operating the lowering device with the portable half-inch chuck drill using a clutch mechanism.

Ensure that the lowering tool is manufactured of durable, corrosion-resistant materials that are powder-coated, galvanized, or otherwise protected from the environment by industry-accepted coatings that withstand exposure to a corrosive environment.

Provide a minimum of one lowering tool plus any additional tools. Upon a project's final acceptance, deliver the lowering tool to NCTA.

(g) Lowering Cable

Provide a lowering cable with a minimum diameter of 0.125 inch. Construct it of stainless steel aircraft cable with a minimum breaking strength of 1,740 pounds, and with seven strands of 19-gauge wire each. Ensure that the prefabricated components for the lift unit support system preclude the lifting cable from contacting the power or video cables.

(h) Wiring

Ensure that all wiring meets NEC requirements and follows the equipment manufacturers' recommendations for each device connected on the pole, at the lowering device, and in the field cabinet.

(C) CONSTRUCTION METHODS

1. General

Obtain approval from the Engineer for final field locations of the CCTV/MVDS metal poles before developing shop drawings and installing the poles. In order not to obstruct proper storm drainage, do not install poles in the center of ditch lines. Obtain shop drawings, signed and sealed by a North Carolina registered engineer, for each pole location (each combination of pole height and equipment mix) and submit to Engineer for approval. When approved, submit to pole manufacturer. Determine and provide to pole manufacturer the effective projected area of all items to be attached to each pole at each pole location. Construct drilled pier foundations, drilled pier wing-wall

foundations, and erect pole in accordance with Section 10.4 of the "Project Special Provisions for Signals and Intelligent Transportation Systems".

2. Camera Lowering Device

Preassemble all components on the ground and tension the lifting cables. Assemble and install the pole and lowering device according to the manufacturer's recommended procedures.

Make a watertight seal between the lowering device and CCTV dome housing. Test the watertight seal of the lowering device and CCTV dome. Test the seal with a water hose.

Ensure that all other cables remain stable and secure during lowering and raising operations and are not entangled or abraded by movement of the lowering cable.

Ensure that the divided support arm and receiver brackets self-align the contact unit with the pole centerline during installation and that the contact unit cannot twist when subjected to the design wind speeds defined in the Standard Drawings for Metal Poles Drawing M 1. Supply an internal conduit in the pole for the power and video cabling.

Ensure all pulleys installed for the lowering device and portable lowering tool have sealed, self-lubricated bearings, oil-tight bronze bearings, or sintered bronze bushings.

CCTV FIELD EQUIPMENT

(A) DESCRIPTION

Design CCTV camera locations to provide full viewing coverage of the project corridor. Also, provide camera coverage of the crossing roads (out to approximately ¼ mile) that interchange with above-mentioned facilities. The ITS Concept Plans show possible locations but the final locations and quantity are the responsibility of the Design-Build Team. All cameras must be serviceable either by a) camera lowering device or b) aerial lift truck with a working height of 50 feet or less, without a lane closure. Locate CCTV and poles to minimize further clearing and grubbing of the right of way. Provide traffic control for the installation of those proposed cameras along existing roadways within the project limits. The video shall be encoded using MPEG-4 video compression for transmission over an Ethernet network on single-mode fiber-optic cable.

Furnish and install CCTV field equipment, cabinets and local camera control software described in this Section and as shown in the ITS Concept Plans.

Provide a system to protect field devices and electronic equipment from lightning and surge protection using transient voltage and surge suppression (SPD) technology and standards.

(B) MATERIALS

1. General

Furnish new CCTV camera assemblies and CCTV cabinets.

Each CCTV camera assembly shall consist of the following:

- NEMA environmental dome enclosure
- CCTV day/night color digital signal processing camera unit with zoom lens, filter, control circuit, and accessories
- Control receiver/driver that complies with the NTCIP specifications found elsewhere in this Scope of Work.
- Motorized pan, tilt, and zoom
- Power supplies
- Pole-mount camera lowering device attachment hardware
- All necessary cable, connectors and incidental hardware to make a complete and operable system
- Furnish a NEMA Type 4, IP 66 enclosure constructed of aluminum with a clear acrylic dome or approved equal camera unit housing
- 60-foot (minimum) composite cable for power supply and video and data transmission
- Surge suppression devices (SPDs)

2. Standards

- ANSI
- ASTM
- CE, Class B
- EIA Standards 170, 232, 422, 250C and 485
- FCC Rules Part 15, Sub-part J
- FCC Class A
- FCC, Class B
- IEEE
- ICEA
- IMSA
- ISO 9001
- NEC
- NEMA 4X, IP 66
- NEMA Type 1
- NTSC
- UL Listed

Provide UL listed SPD devices according to the *UL 1449, 2nd edition* standard and shall comply with the NEMA requirements as detailed in the *NEMA LS 1 (1992)* standard.

Provide UL listed air terminal according to the *UL 96A* standard and be suitable for use in a UL master label lightning protection system.

3. Camera and Lens

(a) Cameras

Provide new ¼-inch EXview HAD (Hole-Accumulation Diode) charged-coupled device (CCD) color cameras. Provide cameras with automatic gain control (AGC) for clear images in varying light levels. The camera must meet the following minimum requirements:

- Video signal format: NTSC composite color video output,
- Image sensor resolution: 540 TV lines,
- Image resolution (NTSC): 768 horizontal pixels by 494 vertical pixels,
- Automatic gain control (AGC): 0-20 dB, peak-average adjustable,
- White balance: Automatic through the lens with manual override,
- Electronic-shutter: Dip-switch selectable NTSC electronic shutter with speed range from 1/2 of a second (off) to 1/30,000th of a second,
- Overexposure protection: Built-in circuitry or a protection device to prevent any damage to the camera when pointed at strong light sources, including the sun,
- Gain control: Automatic and manual,
- Sensitivity at 35 IRE: 0.55 lux at 1/60 sec shutter speed (color),, 0.063 lux at 1/4 sec shutter speed (color), 0.00018 lux at 1/2 sec shutter speed (black and white),
- Sync system: Internal AC line lock, phase adjustable using remote control, V-sync,
- Signal to noise ratio: Greater than 50 dB,
- Video output connection: 1-volt peak to peak, 75 ohms terminated, BNC connector,
- Primary voltage: 120 VAC,
- Camera voltage: 24 VAC or 24 VDC, and
- Camera power: 73 VA with heater at 24 VAC or 3 amps at 24 VDC.

(b) Zoom Lens

Furnish each camera with a motorized zoom lens with automatic iris control with manual override and neutral density spot filter. Furnish lenses that meet the following optical specifications:

- Automatic focus: Automatic with manual override,
- Horizontal Angle of View: 56 degrees at 3.4 mm wide zoom and 1.7 degrees at 119 mm telephoto zoom,
- Focal length: 3.4mm – 119mm , 35X optical zoom, 12X

electronic zoom,

- Zoom Speed: 3.2, 4.6 and 6.6 seconds,
- Lens aperture: Minimum of f/1.4,
-
- Preset positioning: Minimum of 256 presets.

The lens must be capable of both automatic and remote manual control iris and focus override operation. The lens must be equipped for remote control of zoom and focus, including automatic movement to any of the preset zoom and focus positions. Provide mechanical or electrical means to protect the motors from overrunning in extreme positions. The operating voltages of the lens must be compatible with the outputs of the camera control.

4. Camera Housing

Furnish new dome style enclosure for assemblies with a high performance integrated dome system or approved equal. Provide the dome housing with a 1½" NPT threaded cable entry. Equip each housing with a mounting assembly for attachment to the CCTV camera-lowering device, or to the pole if lowering devices are not used. Equip the enclosure with a strip heater. Provide a sunshield fabricated from corrosion resistant aluminum and finished in a neutral color of weather resistant enamel. The viewing area of the enclosure must be tempered glass.

Provide surge protectors for all ungrounded conductors that will enter the CCTV enclosure as described below. House the surge protectors within the CCTV housing in a manner approved by the Engineer.

A dome-type environmental housing shall have a sustained ambient operating temperature of -50 degrees F to 122 degrees F, with 100 percent non-condensing relative humidity as defined within the NEMA TS-2 (1998) standard.

The enclosure shall have a NEMA 4X/IP-66 rating.

5. Pan and Tilt Unit

Each new dome style assembly must be equipped with a pan and tilt unit. The pan and tilt unit must be integral to dome system. The pan and tilt unit must be rated for outdoor operation. Provide dynamic braking for instantaneous stopping, prevent drift, and have minimum backlash. The dome must have an auto flip dome rotation to rotate and reposition camera for viewing objects passing below camera. Equip the drive unit with electronic image stabilization and image enhancement. The pan and tilt units must meet or exceed the following specifications:

- Pan: Continuous 360 degrees,
- Tilt: +2 degrees to -92 degrees unobstructed minimum,
- Presets: Minimum of 256 presets,
- Preset accuracy: .1 degree,

- Preset pan speed: .1 degrees/second to 200 degrees/second,
- Preset tilt speed: .1 degrees/second to 400 degrees/second,
- Privacy zones: Minimum of eight user configurable shapes,
- Input voltage: 24 VAC 60 Hz or 24 VDC, and
- Motors: Two-phase induction type, continuous duty, instantaneous reversing.

6. Power Supplies

Provide all power supplies necessary for the camera and its pan tilt unit. Mount power supplies in the camera cabinet and utilize composite cable to supply power the camera and pan tilt unit.

7. Control Receiver/Driver

Each new camera unit must contain control receiver/driver that is integral to the CCTV dome assembly. The control receiver/driver must receive serial asynchronous data initiated from a camera control unit, decode the command data, perform error checking, and drive the pan/tilt unit, camera controls, and motorized lens. As a minimum, the control receiver/drivers must provide the following functions:

- Zoom in/out,
- Automatic focus with manual override,
- Tilt up/down,
- Automatic iris with manual override,
- Pan right/left, and
- Minimum of 256 preset positions for pan, tilt, and zoom.

In addition, each control receiver/driver must accept status information from pan/tilt unit and motorized lens for preset positioning of those components. The control receiver/driver must relay pan, tilt, zoom, and focus positions from the field to remote camera control units. The control receiver/driver must accept "goto" preset commands from the camera control unit, decode the command data, perform error checking, and drive the pan/tilt and motorized zoom lens to the correct preset position. The preset commands from the camera control unit will consist of unique values for the desired pan, tilt, zoom, and focus positions.

8. Composite Cabling

Provide a composite cable for carrying the CCTV power, analog video and serial data between the camera and CCTV cabinet. The composite cable shall consist of:

- Outer jacket composed of UV resistant PVC,
- RG-59U coaxial cable
  - Maximum outer diameter .75 in.,
  - PVC jacket
  - 75 ohm rating

  - Nominal capacitance of 17.5 pF/ft.,
  - 22 AWG stranded copper center conductor,
  - Bare copper stranded shield,
- Data cable
  - 22 AWG stranded cable,
  - Two twisted pairs,
  - Nominal capacitance of 26 pF/ft.,
  - Nominal impedance of 55 ohms,
  - Common shield/drain wire,
- Power Cable,
  - 16 AWG,
  - Four wire, and
  - THHN stranded.

9. Software

Provide a vendor-supplied GUI-based software to setup, configure and operate the cameras in the field. This software shall include features to set communications addresses and protocols, define camera ID lens control, digital signal processing (DSP) settings, azimuth configuration, presets, tours, and privacy zones. Provide an on-screen compass direction indication. The software shall allow the user to control all functions of the camera locally from the CCTV cabinet at the base of the pole with a serial or USB cable.

10. CCTV Camera Attachment to Pole

Comply with the Section on Metal CCTV and MVDS poles in this Scope of Work.

11. Surge Suppression

Provide a maximum 20 ohm ground impedance measurement, and the placement of transient voltage protection both ahead of and behind the ITS device electronics for CCTV installations. All SPD devices shall have an ambient operating temperature of -40 degrees F to 165 degrees F with 95 percent non-condensing relative humidity.

(a) Grounding

Furnish a grounding system as shown in the ITS Concept Plans. Provide all connections to the grounding electrode with an exothermic weld. Bond (i.e., connect) all metal components of the camera and cabinets to the grounding system with a grounding cable that uses a mechanical connection on the equipment side and an exothermic welded connection at the down cable.

(b) Load Side CCTV Power

Load side protection is designed to restrict surge current transients from entering the power source from the CCTV device and/or site. The SPD for the CCTV

power source shall have an operating voltage of 120 volts single phase and a maximum continuous operating voltage of 150 volts single phase.

The device's SPD shall be rated at a minimum of 90,000 amps per phase and have maximum clamping voltage ratings of 330 volts at 500 amps, 395 volts at 3,000 amps, and 533 volts at 10,000 amps. The SPD shall also be UL listed for a minimum suppressed voltage of 330 volts per line to the neutral/ground. The suppression device shall be of the metal oxide varistor (MOV) type.

(c) Line Side CCTV Power

The SPD for the CCTV power source shall have an operating voltage of 120 volts single phase and a maximum continuous operating voltage of 150 volts single phase. The SPD shall be rated at a minimum of 150,000 amps per phase, and have minimum clamping voltage ratings of 293 volts at 500 amps, 350 volts at 3,000 amps, and 446 volts at 10,000 amps. The SPD for the power source shall also be UL listed for a minimum suppressed voltage of 400 volts per line to the neutral/ground. The suppression device shall be an MOV type.

(d) CCTV Data/Video Supply and Load Side

The SPD shall have an operating voltage to match the characteristics of the CCTV, such as 24 volts of direct current (VDC) and less than five VDC for data and video functions. These specialized SPD units shall be UL listed according to the *UL 497A* standard. The minimum surge current rating for the SPD shall be 2,000 amps for data and telecommunications, and 4,000 amps for binary network connectors (BNC).

(C) CONSTRUCTION METHODS

1. Electrical and Mechanical Requirements

Ground all equipment as called for in the *Standard Specifications*, this Scope of Work, and the ITS Concept Plans.

Install surge protectors on all ungrounded conductors entering the CCTV enclosure as described below. House the protectors in the CCTV cabinet on the pole in a manner approved by the Engineer. The air terminal ground wire must not pass through this cabinet.

2. CCTV Camera

Mount CCTV camera units at the height specified in this Scope of Work. Install CCTV assemblies at the locations shown on the ITS Concept Plans unless otherwise approved by the Engineer.

Mount the CCTV camera on the side of pole nearest the intended field of view so that the mounting avoids occluding the view with the pole. Obtain approval of camera orientation from the Engineer.

Use the vendor-supplied software to configure the cameras.

3. Power Service

Provide 120 Volt power service. Comply with the "Electrical Service" section of this Scope of Work.

4. Surge Suppression

(a) Grounding

Connect all grounding points related to CCTV pole and its subsystems to a single point main grounding electrode, sometimes referred to as the ground window, which shall be driven a minimum of 12 inches from the CCTV pole. Each grounding electrode requires an interfacing hemisphere, an imaginary cylinder with a diameter and depth equal to the length of the electrode. Therefore, a grounding electrode that is a minimum of 10 feet long shall be installed 10-20 feet away from any additional grounding electrodes and/or ground-mounted devices.

Install a minimum of one grounding radiant, plus additional radiants as required to achieve a resistance to ground of 20 Ω or less, at each CCTV pole. This grounding radiant shall consist of one main grounding rod that is a minimum of 10 feet long located at the structural base of the CCTV pole and attached to one additional 20-foot radiant grounding rod placed a minimum of 20 feet away from the main grounding rod. Attach the main grounding rod to the CCTV pole by a solid #4 ground cable that shall be exothermically welded. Attach the radiant grounding rod to the main grounding rod with a minimum #4 solid bare copper wire that is exothermically welded at both the main grounding rod and the radiant grounding rod.

(b) Load Side CCTV Power

Install a transient voltage suppressor (SPD) at the CCTV power source on the load side. This device shall provide protection between line-to-neutral, line-to-ground, line-to-line, and neutral-to-ground.

(c) Line Side CCTV Power

Install a SPD in the power line side ahead of all CCTV electronic equipment. This installation technique is designed to restrict earth current transients induced within the ground, or directly from the power source, from entering the ITS device through the incoming 120-volt power circuit. This device shall provide protection between line to neutral, line to ground, line-to-line and neutral to ground.

(d) Device Data/Video Line and Load Side

Install specialized SPD devices at the line and line sides of all low voltage connections to the CCTV device and its operating subsystems. These connections include, but are not limited to, Category 6 data cables, coaxial video cables, twisted pair video cables, and low voltage control cables that comply with EIA requirements as detailed in the EIA-232/422/485 standards.

MICROWAVE VEHICLE DETECTION SYSTEM

(A) GENERAL

Furnish and install a microwave vehicle detection system (MVDS) as shown in the ITS Concept Plans and as directed by the Engineer that is capable of traffic data collection meeting this section's requirements. Conform to the placement guidelines found in the Detector Location sheet of the ITS Special Details. Ensure that the MVDS can be mounted on new MVDS poles, or CCTV poles for a side-fire configuration. The final locations and quantity to provide the minimum coverage shown in the ITS Concept Plans are the responsibility of the Design-Build Team. All interchange ramps shall be covered with a dedicated detector and not by derivation or calculation of other detectors. Detectors for different ramps may share the same pole if the above requirements are otherwise met.

The detection units shall use Ethernet communications for monitoring and control from the MRTMC, STOC, the NCTA Executive Offices, and other NCTA facilities using Smartlink.

(B) MATERIALS

1. General

Provide an MVDS assembly for the project site that consists of microwave radar sensor(s) in enclosed housing(s) (i.e., the detectors), as shown in the ITS Concept Plans and directed by the Engineer. Provide an installation kit with mounting brackets; home run cable for the transmission and receipt of data and communications between the field detector and the communication system hardware; and all required power and data cables, as detailed in the ITS Concept Plans.

2. Detector

Provide a (MVDS) that uses a Federal Communications Commission (FCC)-certified, low-power microwave radar beam to detect vehicle passage and generate volume, occupancy, length-based classification, and speed data. Ensure that the MVDS is a true-presence microwave radar that uses the frequency modulated continuous wave (FMCW) principle. Ensure that any non-background targets reflect the signal back to the microwave radar detector, where the targets are detected and their range measured.

Ensure that the MVDS provides speed-trap emulation and has the ability to detect automatically sensor settings, baud rates, loop spacing, and communication port settings to select an operational mode.

Ensure that the detector has the ability to self-tune and allow manual calibration via supplied vendor software. Ensure that the MVDS is capable of auto-calibration and auto-configuration, and that it does not transmit any signals outside its FCC-approved frequency. Provide a setup program that allows the operator to define detection zones within the detector's field of view. Ensure that the detector automatically configures zones, requiring minimal external tuning. Verify that the unit is not adversely affected by varied weather conditions, such as rain, fog, heat, or wind.

Ensure that the MVDS can compute, store, and provide all required traffic parameter measurements per detection zone in user-selected time intervals from 0 to 60 minutes, including, but not limited to, 10 seconds, 20 seconds, 30 seconds, 60 seconds, 5 minutes, 10 minutes, 15 minutes, 30 minutes, and 60 minutes. The MVDS shall log and store vehicle volume, occupancy, length-based classification and speed data for a minimum of seven days regardless of collection interval. Data storage within the MVDS shall utilize a first in/first out architecture such that the oldest stored data record is overwritten with the newest data record when the storage device is at full capacity.

(a) Communications

Ensure that the MVDS generates and transmits traffic data either in serial format using an Electronic Industries Alliance (EIA) standard EIA-232 communication port or an Internet Protocol (IP) interface. If the detector does not have Ethernet communications integral to the detector provide data translators to provide for Ethernet communications. Ensure that the MVDS can generate contact closures emulating the output of a pair of 6-foot by 6-foot loops with leading edges placed 16 feet apart.

Verify that the MVDS is IP addressable. Ensure that all device communication addresses are user programmable.

Ensure that the MVDS supports Ethernet protocols. Ensure that the setup program assigns an IP address to the detection unit. Ensure that the MVDS responds to a polling request from the TMC for traffic data. Verify that the detection unit responds with the accumulated traffic parameter measurements from the period since the last request was issued.

Verify that the MVDS stores all system configuration and traffic parameter data within internal nonvolatile memory. Verify that traffic data can be locally and remotely transferred by issuing requests from a personal computer (PC) across the communication network connecting the detector and the MRTMC and STOC operator workstation or other PC.

(b) Configuration and Management

Ensure that the MVDS software application provides a display via Smartlink of the detection zones and control of any vehicle detector connected to the network. Ensure that the MVDS setup program enables the operator to select whether data

is output as contact closures emulating standard loop detector outputs, and/or as accumulated statistical data using detector serial ports.

Verify that the sensor holds a vehicle's presence in the specified detection zone until the vehicle is clear of the zone. Ensure that the sensor does not tune out stationary vehicles within a detection zone and thereby give a false clear status to the lane, even if a vehicle has stopped for a period exceeding 30 minutes. Provide a detector that is capable of resolving closely spaced vehicles.

Provide an assembly manufactured in such a way as to prevent reversed or improper installation. Ensure that the MVDS design provides high-voltage exposure protection to personnel during equipment operation, adjustments, and maintenance.

Provide software licenses.

Ensure that an operator using a locally connected laptop computer can conduct system setup, calibration, diagnosis, and data retrieval operations. Ensure that the MVDS is capable of having its configuration data saved to a laptop computer or TMC server, which can later transfer the data back to the MVDS for reloading.

Ensure that the MVDS operator can use a laptop computer or TMC server to edit previously defined detection configurations to permit adjustments to the detection zone's size, placement, and sensitivity, and to reprogram the detector's parameters.

Ensure that the laptop computer and the MVDS can communicate when connected directly by an EIA-232 cable. Ensure that the laptop computer and MVDS can communicate across the ITS system's communication network using the NTCIP standards described in this Scope of Work. Ensure that the software allows communication between multiple users and multiple field devices concurrently across the same communication network.

Once programmed, ensure that no periodic adjustments are required to the detection zones unless physical roadway conditions change, such as lane shifts or closures.

(c) Electrical Requirements

Ensure that the MVDS field hardware meets the requirements in the FCC's 2005 Code of Federal Regulation (CFR), Title 47, Part 15. The detector shall not interfere with any known equipment.

Ensure the MVDS operates using a nominal input voltage at the field cabinet of 120 volts of alternating current (V_{AC}). Ensure that the system's power supply will operate with an input voltage ranging from 89 to 135 V_{AC}. For any device requiring a source input other than the standard 120 V_{AC}, supply the appropriate means of conversion.

Provide an assembly manufactured in such a way as to prevent reversed or improper installation. Ensure that the MVDS design provides high-voltage exposure protection to personnel during equipment operation, adjustments, and maintenance.

Furnish all equipment with the appropriate power and communication cables. Install the power cable and the communication cables according to the manufacturer's recommendation. Ensure that the cables comply with NEC sizing requirements as presented in NEC Article 210-19(a), Fine Print Note (FPN) No. 4, and meet all other applicable standards, specifications and local code requirements.

Ensure that the power cable running between the MVDS and its electrical service is in a separate conduit. Do not install communication cables in the same conduit as power cables carrying voltage greater than 24 V_{DC}/V_{AC} or current in excess of 1.5 amps. Do not install the power and communication cables in the same pull boxes.

Cut all wires to their proper length before assembly. Do not double back any wire to take up slack. Neatly lace wires into cables with nylon lacing or plastic straps. Secure cables with clamps and provide service loops at all connections.

In the event that power to the MVDS or a subcomponent thereof is interrupted, ensure that the equipment automatically recovers after power is restored. Ensure that all programmable system settings return to their previous configurations and the system resumes proper operation.

Ensure that the MVDS operator is able to select and use 12 to 24 volts of direct current (V_{DC}) and 115 V_{AC} at 60 Hz.

Ensure that the detector is FCC certified and that the FCC's identification number is displayed on an external label. Ensure that the detector transmits within a frequency band of 10.525 gigahertz, ±25 megahertz, or another FCC approved spectral band.

(d) Environmental Requirements

Provide MVDS that meet all specifications during and after being subjected to an ambient operating temperature range of -29 degrees F to 165 degrees F with a maximum non-condensing relative humidity as defined in the environmental requirements section of the NEMA TS 2 standard.

Verify that the MVDS manufacturer certifies that its device has successfully completed environmental testing as defined in the NEMA TS 2 standard. Verify that vibration and shock resistance meet the requirements of Sections 2.1.9 and 2.1.10, respectively, of NEMA TS 2.

Ensure that no item, component, or subassembly emits a noise level exceeding the peak level of 55 decibels adjusted (dBa) when measured at a distance of 3.3 feet away from its surface.

Ensure that MVDS components comply with the environmental requirements detailed in the NEMA TS 2 standard.

(e) Detector Housing

Furnish and install an environmentally resistant and tamper-proof sensor enclosure for any detector assembly exposed to the elements. Ensure that the enclosure is environmentally sealed upon installation and that it is light in color.

(f) Wind Loads

Design MVDS poles in accordance with the 5th Edition 2009 AASHTO "Standard Specifications for Structural Supports for Highway Signs, Luminaires, and Traffic Signals, including all of the latest interim revisions.

(g) Performance

Provide a MVDS capable of meeting the minimum total roadway segment accuracy levels of 95% for volume, 90% for occupancy, 90% for length based classification and 90% for speed for all lanes, up to the maximum number of lanes that the device can monitor as specified by the manufacturer. This evaluation (by necessity) shall take place during the Observation Period.

To verify conformance with the accuracy requirements in this section, perform evaluations by comparing sample data collected from the vehicle detection system with ground truth data collected during the same time by human observation or by another method approved by the Engineer. Base the vehicle detection system's performance evaluation on sample data taken over several periods under a variety of traffic conditions. Develop and adhere to a methodology to collect data and calibrate and evaluate the performance of each device using speed, volume, and occupancy data.

3. Software

Ensure the MVD software can perform the following tasks:

- Device configuration and setup,
- Diagnostic testing,
- Device management,
- Data retrieval, analysis, reporting and storage,
- Data importing from NCDOT's MVDS database,
- Data exporting to other systems, including but not limited to:
  - Toll collection system for congestion pricing
  - *Smartlink*

- Dynamic Message Signs for travel time posting
- NCDOT for posting on a speed map

Ensure software can collect data from each sensor as frequently as 20-second intervals.

The report function shall include user-definable queries in graphical, text and tabular formats.

Ensure software can perform database translations, data types and file formats to accomplish the above data exporting. The software should utilize the following minimum file formats: XML, HTML, SQL, Excel, and PDF. Ensure software includes "on-demand" and scheduled data translation.

The Design-Build Team shall update the NCTA website speed map, as well as the Smartlink/TIMS speed map, by depicting/providing:

- Location of each MVDS on Garden Parkway (both segments),
- Background map suitable in detail and for use on Internet website.

The maps shall be expanded to display all of the Garden Parkway and the crossing routes (whether interchange or otherwise). Depict on the map local names, route numbers, and major landmarks. The Design-Build Team shall develop a verification plan to be approved by Engineer to verify that speeds displayed on the map are accurate. This verification shall take place during the Observation Period.

Provide device drivers for detectors provided in this Scope of Work.

(C) CONSTRUCTION METHODS

Install, configure, and demonstrate a fully functional vehicle side-fire detection system. Connect all field hardware to the communication network, and provide all materials specified in this Scope of Work. Install all equipment according to the manufacturer's recommendations or as directed by the Engineer.

1. Electrical and Mechanical Requirements

Ground all equipment as called for in the *Standard Specifications*, this Scope of Work, and the ITS Concept Plans.

Install surge protectors on all ungrounded conductors entering the MVDS enclosure as described below. House the surge protectors in the MVDS cabinet on the pole in a manner approved by the Engineer. The air terminal ground wire must not pass through this cabinet.

2. MVDS

Ensure that the MVDS can be mounted on new MVDS poles or CCTV poles, in a side-fire configuration. Mount each MVDS at height and setback corresponding to the manufacturer's recommendations for the number of lanes and the detection zone. For

CCTV poles with lowering devices, provide a detector-mounting bracket to mount the detector on the side of the pole 90 degrees to traffic so the camera and lowering device do not strike the detector. For locations where the minimum setback cannot be met when mounting on front face of pole, provide a mounting bracket to mount on the side of the pole 90 degrees to traffic so the camera and lowering device do not strike the detector. Use this method only if that provides the minimum setback.

Mount the MVDS detector as detailed in the ITS Concept Plans and ITS Standard and Special Details. In either configuration, mount the detector level with respect to the centerline of the roadway. Tilt the unit downward toward the roadway to ensure detection of all lanes.

Ensure that the MVDS sensor has a 200-foot range, and that the viewing angle is a minimum of 40 degrees vertical and a maximum of 15 degrees horizontal. Verify that all detection zones are contained within the specified elevation angle according to the manufacturer's recommendations and that the MVDS is capable of fully detecting all vehicles in a minimum of eight lanes or zones. Ensure that the configuration also provides accurate collection of all data types as detailed in this specification.

Provide a detector housing that can be pole-mounted, as indicated in the ITS Concept Plans. Supply a universal mounting bracket that is adjustable on two axes for optimum alignment.

Attach the mounting bracket with approved stainless steel bands that are 0.75 inch wide and 0.025 inch thick, or mount to a concrete structure using two stainless steel expansion bolts of sufficient length and diameter to support 100 pounds.

When installing a detector near metal structures, such as buildings, bridges, or sign supports, mount the sensor and aim it so that the detection zone is not under and does not pass through any structure to avoid distortion and reflection.

Ensure that the detector is factory calibrated to comply with all applicable standards, specifications, and requirements.

Provide an interface to external equipment with a single connector. Ensure that the connector provides power to the unit and allows generation of contact closure output pairs. Ensure that the connector includes serial communication lines for programming, testing, and interfacing with the modem/switch at 9,600 to 115,000 bps baud rate and that it has at least 26 pins. Ensure that the serial port's data format is standard binary non-return to zero (NRZ) modulation with 8-bit data, 1-stop bit, and no parity.

Ensure that the homerun cable is a polyurethane-jacketed cable approved by the Engineer, with polyvinyl chloride (PVC) insulated conductors. The homerun cable shall have a 300-volt rating and a temperature rating of 200° F. Ensure that the cable is equipped with #20 or #22 American Wire Gauge (AWG) conductors.

Crimp or solder the detector connector pins to the cable conductors. Assemble and test the cable prior to onsite installation and pulling. Cut all wires to their proper length

before installation. Do not double back wire to take up slack. Neatly lace wires into cable with nylon lacing or plastic straps, and secure cables with clamps. Provide service loops at all connections.

Perform continuity tests on the detector's stranded conductors using a meter having a minimum input resistance of 20,000 Ω per volt and show that each conductor has a resistance of not more than 16 Ω per 984.25 feet of conductor.

Measure the insulation resistance between isolated conductors and between each conductor, ground, and shield using a meter designed for measuring insulation resistance. The resistance must be infinity. Perform all resistance testing after final termination and cable installation, but prior to the connection of any electronic or field devices.

3. Power Service

Provide 120VAC power service. Comply with the "Electrical Service" section of this Scope of Work.

4. Surge Suppression

(a) Grounding

Connect all grounding points related to the MVDS to a single point main grounding electrode as shown in the ITS Concept Plans. A 10-foot grounding electrode shall be installed a minimum of 20 feet away from any additional grounding electrodes and/or ground mounted devices.

This grounding radiant shall consist of one main 10-foot grounding rod located at the structural base of the MVDS pole and attached to three additional 10-foot radiant grounding rod placed a minimum of 20 feet away from the main grounding rod. Attach the radiant grounding rod to the main grounding rod with a minimum #4 solid bare copper wire that is exothermically welded at both the main grounding rod and the radiant grounding rod.

(b) Load Side Detector Power

Install a transient voltage suppressor (SPD) at the MVDS power source on the supply side. This device shall provide protection between line-to-neutral, line-to-ground, line-to-line, and neutral-to-ground.

(c) Line Side Detector Power

Install a SPD in the power line side ahead of all MVDS electronic equipment. This installation technique is designed to restrict earth current transients induced within the ground, or directly from the power source, from entering the ITS device through the incoming 120/240-volt power circuit. This device shall

provide protection between line to neutral, line to ground, line-to-line and neutral to ground.

(d) Load Side Detector Data

Install specialized SPD devices at the supply and line sides of all low voltage connections to the MVDS and its operating subsystems. These connections include, but are not limited to, Category 6 data cables, and low voltage control cables that comply with EIA requirements as detailed in the EIA-232/422/485 standards.

(e) Software

If software is required, install the software application(s) on the STOC virtual servers for access by all MRTMC operators, NCTA STOC workstation, and NCTA Executive Office access. Coordinate with Toll Systems Integrator to define the data variables, database type and file format for congestion pricing. Configure data translation applications for those services described above.

DYNAMIC MESSAGE SIGN (DMS) SYSTEM

(A) DESCRIPTION

1. General

Furnish and install new NTCIP v2 compliant Dynamic Message Signs (DMS), and DMS power and communications equipment in accordance with this Scope of Work and ITS Concept Plans. Integrate the signs into the *Smartlink* software.

Furnish and install DMS signs compliant with UL standards 48, 50, 879, and 1433.

Add and configure all new DMS (including those on the Garden Parkway West project) in the existing *Smartlink* database on the NCTA servers. Furnish, install, test, integrate, and make fully operational the new DMSs at locations shown on the project plans. The Design-Build Team shall also be responsible for any MIB development and configuration if NCDOT does not already have MIBs for the DMS.

The structures supporting the DMS are described elsewhere in this RFP. Furnish, install, test, integrate and make fully operational the new DMSs at locations shown in the ITS Concept Plans.

For each location, the DMS system shall include:

- Color, full matrix LED technology
- Minimum 27 pixels high by 110 pixels wide display (27 by 90 pixels for off-site signs)
- DMS controller
- Uninterruptible Power Supply (UPS)
- Cabinet and accessories with interconnect, power cabling and conduit

- Electrical service and related equipment
- All other equipment and incidentals required for furnishing, installing, and testing system and system components
- Use only UL listed and approved electronic and electrical components in the DMS system
- Walk-in housing or front access, as shown on the ITS Concept Plans

(B) MATERIALS

1. General

Construct the DMS to display at least three lines of text that, when installed, are clearly visible and legible to a person with 20/20 corrected vision from a distance of 900 feet in advance of the DMS at an eye height of 3.5 feet along the axis.

When displaying three lines, each line must display at least 15 equally spaced and equally sized alphanumeric individual characters. Each character must be at least 18 inches in height and composed from a luminous dot matrix.

2. Environmental Requirements

Construct the DMS and DMS controller-cabinet so the equipment within is protected against moisture, dust, corrosion, and vandalism.

Design the DMS system to comply with the requirements of Section 2.1 (Environmental and Operating Standards) of NEMA TS 4-2005.

Construct the DMS and housing so that it can withstand AASHTO 2002 50-year wind speed for the area where the DMS will be installed.

3. DMS Enclosures

The DMS enclosure construction shall comply with the requirements of Section 3 (Sign Mechanical Construction) of NEMA TS 4-2005. The following requirements complement TS 4-2005.

Paint the DMS face matte black. All grind marks and discoloration shall be removed from the surfaces.

All nuts, bolts, washers, and other mounting and bonding parts and components used on the exterior of the DMS enclosure shall be corrosion resistant and sealed against water intrusion.

Do not place a manufacturer name, logo, or other information on the front face of the DMS or shield visible to the motorist.

Do not paint the stainless steel bolts on the Z-bar assembly used for mounting the enclosure.

(a) Front Access DMS

The DMS enclosure construction shall comply with the requirements of Section 3 (Sign Mechanical Construction) of NEMA TS 4-2005 as it applies to front access enclosures. Construct the enclosure of welded aluminum type 5052-H32, or of an Engineer approved alternate. The sheet aluminum skin shall be a minimum of .090-inch thick. Perform all welding of aluminum and aluminum alloys in accordance with the latest edition of AWS D1.2, Structural Welding Code - Aluminum. Continuously weld the seams using Gas Metal Arc Welding (GMAW).

(b) Walk-in DMS

The DMS enclosure construction shall comply with the requirements of Section 3 (Sign Mechanical Construction) of NEMA TS 4-2005 as it applies to Walk-in enclosures. Construct the enclosure of welded aluminum type 6061-T6 (major structural components), 5052-H32 (minor structural components and exterior shell), or of an Engineer approved alternate at least .125-inch thick. Perform all welding of aluminum and aluminum alloys in accordance with the latest edition of AWS D1.2, Structural Welding Code - Aluminum. Continuously weld the seams using Gas Metal Arc Welding (GMAW). All structural attachment hardware (direct tension indicators, nuts, bolts, washers) shall be either stainless or galvanized steel A325 high strength steel.

Construct the DMS with a metal walk-in enclosure excluding the face. Provide an aluminum walking platform with a slip resistant surface inside the enclosure that is at least 28 inches wide. The width of the walking platform shall be free of obstructions to a height of 7 feet.

Provide one key lockable, hinged, gasket-sealed inspection door for service and maintenance along each end of the enclosure. Equip the doors with locks operable from the inside. Install one appropriately sized fire extinguisher within 12 inches of each maintenance door. Equip the door with a door-hold-open device.

4. Structural Requirements

(a) General

Mount the DMS enclosure and interconnect system securely to supporting structures as described in this RFP. For Walk-in DMS, design the enclosure supports to allow access to the DMS enclosure inspection door.

Submit plans for the DMS enclosure, mounting description and calculations to the Engineer for approval. Have such calculations and drawings approved by a Professional Engineer registered in the state of North Carolina, and bear his signature, seal, and date of acceptance.

Provide removable lifting eyes or the equivalent on the DMS enclosure rated for its total weight to facilitate handling and mounting the DMS enclosure.

Design the DMS structure to conform to the applicable requirements of the *Standard Specifications for Structural Supports for Highway Signs, Luminaires*, and the section titled "Dynamic Message Sign Assembly" of this Scope of Work.

(b) Direct Tension Indicators

Use direct tension indicators whose material, manufacturing process, performance requirements, workmanship and certification requirements conform to the requirements of ASTM F959.

For Type 3 high strength bolts, use direct tension indicators mechanically galvanized to ASTM B695 Class 50, then with 1 mil of baked epoxy applied.

For plain Type 1 high-strength bolts, use direct tension indicators that are plain or mechanically galvanized to ASTM B695 Class 50.

For galvanized Type 1 high strength bolts, use direct tension indicators that are mechanically galvanized to ASTM B695 Class 50 only.

5. DMS Enclosure Structure Mounting

Provide vertical I-beams or Z-bars bolted through the exterior shell to the structural frame to mount the sign on the structure. Utilize aluminum type 6061-T6 structural members and either stainless or galvanized steel A325 high strength steel mounting hardware. Design and fabricate the vertical supports so hanger attachments can be mounted without affecting or penetrating the outer shell of the sign.

Design the DMS enclosure supports and structure to allow access to the DMS enclosure inspection doors on walk in signs or access panels on front access signs. Design and ensure the penetrations through the exterior shell remain watertight.

6. Front Panel

Protect the DMS face with contiguous, weather-tight, removable panels. Manufacture these panels of sheets of polycarbonate, methacrylate, GE Lexan Type SG300 or equivalent that are ultraviolet protected, have an antireflection coating, and are a minimum of 1/8-inch thick. For substitutes, submit one 12" x 12" sample of the proposed material together with a description of the material attributes to the Engineer for review and approval. Install a .09" aluminum mask on the front of the panel (facing the motorists) that contains circular openings for each LED pixel. Front side of the aluminum mask, which faces the viewing motorists, shall be primed and coated with automotive-grade flat black acrylic enamel paint or an approved equivalent. All painted surfaces shall provide a minimum outdoor service life of 20 years.

Design the panels so they will not warp nor reduce the legibility of the characters. Differential expansion of the DMS case and the front panel must not cause damage to either component or allow openings for moisture or dust. Glare from sunlight, roadway lighting, commercial lighting, or vehicle headlights must not reduce the legibility or visibility of the DMS. Install the panels so that a maintenance person can easily remove or open them for cleaning. Cover the areas of the panels between characters and lines with a flat black, UV-treated, colorfast material to reduce glare.

For front access signs, provide access internal to the sign housing by one of two methods. Method one is provide a hinged front face from the top to allow access to the interior of the sign and all of its components. Method two is the provision of a means to remove any and all display modules described below to access to the interior of the sign and all of its components.

7. Display Modules

Manufacture each display module with a standard number of pixels, not to exceed an array of 9 x 5 that can be easily removed. Assemble the modules onto the DMS assembly contiguously to form a continuous matrix to display the required number of lines, characters, and character height.

Design display modules that are interchangeable and replaceable without using special tools. All power and communication cables connected to a display module shall be plug-in types to allow easy removal for maintenance and repair. Provide a positive locking mechanism to hold the boards in place.

Construct each display module as a rectangular array of 5 horizontal pixels by 7 to 9 vertical pixels. Provide the module with an equal vertical and horizontal pitch between pixels, and columns that are perpendicular to the rows (i.e., no slant). Design each module to display:

- All upper and lower case letters,
- All punctuation marks,
- All numerals 0 to 9, and
- Special user-created characters.

Display upper-case letters and numerals over the complete height of the module. Optimize the LED grouping and mounting angle within a pixel for maximum readability.

8. LED Pixels

A pixel is defined as the smallest programmable portion of a display module that consists of a cluster of closely-spaced discrete LEDs. Design each pixel to be a maximum of 1.75 inches center to center.

Pixels shall be constructed with two strings of LEDs. The number of LEDs in each string shall be determined by the manufacturer to produce the candela requirement as stated herein.

Ensure that all pixels in all signs in a project, including operational support supplies, have equal color and on-axis intensity. Ensure that the sign display produces an overall luminous intensity of at least 92 candelas per square meter when operating at 100% intensity. Measure the brightness of each LED in accordance with the International Commission on Illumination's (CIE) requirements detailed in Test Method A of the CIE 127 (1997) standard. Provide the LED brightness and color bins that are used in each pixel to the Engineer for approval. Provide a letter of certification from the LED manufacturer that demonstrates testing and binning according to the CIE 127 (1997) standard. Ensure each pixel contains two interlaced strings of LEDs. Ensure that all LEDs operate within the LED manufacturer's recommendations for typical forward voltage, peak pulsed forward current, and other ratings. Component ratings shall not be exceeded under any operating condition.

Provide a pixel test as a form of status feedback to the TMC from the local sign controller. Ensure that the operational status of each pixel in the sign can be automatically tested once a day. The operational status may also be tested when the STOC or a laptop computer prompt defective pixels as transmitted to the STOC or a laptop computer. Ensure that the log file includes the pixel status, module number, column number, and pixel number. Ensure that the pixel status test determines the functional status of the pixel as stuck-on or stuck-off and does not affect displayed message for more than half a second.

Each pixel shall contain the quantity of discrete LEDs needed to output white colored light at a minimum luminous intensity of 12,400 candelas per square meter when operated within the forward current limits defined in this Scope of Work.

Power the LEDs in each pixel in strings. Use a redundant design so that the failure of an LED in one string does not affect the operation of any other string within the pixel. Provide the sign controller with the ability to detect the failure of any LED string and identify which LED string has failed. Submit a complete schematic of the LED power and driver circuits with the catalog cuts.

Protect LEDs from degradation due to sunlight via flat black louvers or a functionally equivalent methodology. Place these louvers or equivalent behind the front panel. Use a method that does not reduce the display viewing-angle below that provided by the LED. Install the louvers or equivalent in such a way as to promote cooling of the LEDs and so that they are easily removable for cleaning or maintenance.

9. Discrete LEDs

Provide discrete LEDs with a nominal viewing cone of 30 degrees with a half-power angle of 15 degrees measured from the longitudinal axis of the LED. Viewing cone tolerances shall be as specified in the LED manufacturer's product specifications and shall not exceed +/- 3 degrees half-power viewing angle of 30 degrees.

Provide LEDs with a MTBF (Mean Time Between Failure) of at least 100,000 hours of permanent use at an operating point of 140 degrees F or below at a specific forward

current of 20mA. Discrete LED failure is defined as the point at which the LED's luminous intensity has degraded to 70% or less of its original level.

Obtain the LEDs used in the display from a single LED manufacturer that have a single part number. Obtain them from batches sorted for luminous output, where the highest luminosity LED is not more than fifty percent more luminous than the lowest luminosity LED when the LEDs are driven at the same forward current. Do not use more than two successive and overlapping batches in the LED display. Distribute the batches consistently and evenly across the sign face. Document the procedure to be used to comply with this requirement as part of the catalog cut submittal.

Individually mount the LEDs on circuit boards that are at least 1/16-inch thick FR-4 fiberglass, flat black printed circuit board in a manner that promotes cooling. Ensure the LEDs are mounted parallel and flush to the circuit board. Protect all exposed metal on both sides of the LED pixel board, except the power connector, from water and humidity exposure by a thorough application of acrylic conformal coating. Design the boards so bench level repairs to individual pixels, including discrete LED replacement and conformal coating repair is possible.

Operate the LED display at a low internal DC voltage not to exceed 24 Volts.

Design the LED display operating range to be –20 degrees F to +140 degrees F at 95% relative humidity, non-condensing.

Supply the LED manufacturer's technical specification sheet with the catalog cuts.

Provide LEDs that are untinted, non-diffused, high output solid-state lamps manufactured by Nichia. The red LEDs shall utilize aluminum indium gallium phosphide (AlInGaP) technology with a peak wavelength of 625 ± 5 nm. The green LEDs shall utilize indium gallium nitride (InGaN) technology with a peak wavelength of 525 ± 8 nm. The blue LEDs shall utilize indium gallium nitride (InGaN) technology with a peak wavelength of 471 ± 3 nm. No substitutions will be allowed. Provide 5 mm size LEDs.

10. LED Power Supplies

Power the LED display by means of multiple regulated switching DC power supplies that operate from 120 volts AC input power and have an output of 24 volts DC or less. Wire the supplies in a redundant parallel configuration that uses multiple independent power supplies per display. Provide the supplies with current sharing capability that allows them to provide equal amounts of current to their portion of the LED display. Provide power supplies rated such that if one supply fails the remaining supplies will be able to operate their portion of the display under full load conditions (all pixels on at maximum brightness) and at a temperature of 140 degrees F.

Provide power supplies to operate within a minimum input voltage range of +110 to +130 volts AC and within a temperature range of –22 degrees F to 140 degrees F.

Power supply output at 140 degrees F must not deteriorate to less than 65% of its specified output at 70 degrees F. Provide power supplies that are overload protected by means of circuit breakers, and that have an efficiency rating of at least 75%, a power factor rating of at least .95, and are UL listed. Provide all power supplies from the same manufacturer and with the same model number. Design the power driver circuitry to minimize power consumption.

Design the field controller to monitor the operational status (normal or failed) of each individual power supply and be able to display this information on the client computer screen.

11. Character Display

Design display modules to be easily removable without the use of tools. Position cooling fans so they do not prevent removal of an LED pixel board or driver board.

Use continuous current to drive the LEDs at the maximum brightness level. Design the light levels to be adjustable for each DMS / controller so the Engineer may set levels to match the luminance requirements at each installation site.

Design the controller to automatically detect failed LED strings or drivers and initiate a report of the event to the control software. Design the controller to be able to read the internal temperature of the DMS enclosure and the ambient temperature outside the DMS enclosure and report these to the control software.

12. Display Capabilities

Design the DMS with at least the following message displays:

- Static display,
- Flashing display with dynamic flash rates, and
- At least two alternating static and / or flashing sequences (multi-page messages).

13. DMS Interior Environment Monitoring and Control

Design the local field controller to monitor and control the interior DMS environment. Design environmental control to maintain the internal DMS temperature within +/- 10 degrees F of the outdoor ambient temperature. Provide the DMS environmental monitoring and control system with five primary subsystems as follows:

(a) Photo-Electric Sensors

Install three photoelectric sensors with ½-inch minimum diameter photosensitive lens inside the DMS enclosure. Use sensors that will operate normally despite continual exposure to direct sunlight. Place the sensors so they are accessible and field adjustable. Point one sensor point down on the bottom of the sign. Place the other two, on the back wall and one on the front wall of the sign enclosure.

Alternate design maybe accepted provided the sensor assembly is accessible and serviceable from inside the sign enclosure.

Provide controls so that the Engineer can field adjust the following:

- The light level emitted by the pixels elements in each Light Level Mode.
- The ambient light level at which each Light Level Mode is activated.

(b) Internal Temperature Sensors

Provide the DMS with two internally mounted temperature sensors which are equipped with external thermocouples and which the field controller continuously monitors. Design the field controller to use this temperature information to determine when to activate and deactivate the environmental control systems described herein. Locate sensors on opposite ends of the upper 1/3 of the LED display matrix with their external thermocouples attached to and making contact with an LED pixel circuit board. Design the thermocouple and LED board to be easily detachable, in the event that one of the units requires removal and replacement. Provide sensors capable of measuring temperatures from -40 degrees F to +176 degrees F. Design the field controller to automatically shut down the LED display whenever one or both sensors indicates that LED board temperature has exceeded +140 degrees F, and to automatically restart the LED display whenever the suspect temperature falls below +130 degrees F. Design both shutdown and re-start temperature thresholds to be user-programmable. Design the field controller to report sensor temperatures and DMS shutdown/re-start events to the DMS control software.

(c) Housing Cooling System

Provide the DMS housing with a cooling system that circulates outside air into the DMS housing whenever the LED board temperature exceeds a user-programmable threshold. Provide this system with enough ventilation fans to exchange the internal DMS housing air volume at a minimum rate of four times per minute. Provide steel ball-bearing type fans. Mount fans in a line across the upper rear wall of the DMS housing to direct air out of the cabinet. Provide one filtered air intake port for each exhaust fan. Locate intake ports in a line across the lower rear wall of the DMS housing. Provide intake ports with a removable filter that will remove airborne particles measuring 500 microns in diameter and larger. Provide a filter that is of a size and style that is commercially readily available. Program the field controller to activate the DMS housing cooling system whenever the LED board temperature exceeds +90 degrees F and to turn the cooling system off whenever LED board temperature falls below +85 degrees F. On the DMS housing rear exterior wall, cover all air intake and exhaust ports on their top, front, and sides by an aluminum shroud fabricated from 0.090-inch aluminum sheeting. Taper the shrouds at the top to discourage birds from nesting in them. Securely fasten shrouds to the DMS housing, and provide gaskets at the interface to prevent water from entering the DMS. Design all air filters and fans to be removable from inside the DMS housing. Provide the DMS housing cooling

system with an adjustable timer that will turn fans off after the set time has expired. Provide a timer that is adjustable to at least 4 hours, and locate it just inside the DMS housing door, within easy reach of a maintenance technician standing outside the DMS doorway.

(d) LED Display Cooling System

Provide the DMS with an LED display cooling system, which directs air across the LED display modules whenever LED board temperature exceeds a user-programmable threshold. Direct fan-forced air vertically across the backside of the entire LED display matrix using multiple ball-bearing fans. Program the field controller to activate the LED cooling fan system whenever LED board temperature exceeds +90 degrees F and to deactivate the system whenever LED board temperature falls to +85 degrees F. Locate cooling fans so as not to hinder removal of LED display modules and driver boards.

(e) Front Face Panel Defog/Defrost System

Provide the DMS with a defog/defrost system which circulates warm, fan-forced air across the inside of the polycarbonate front face whenever LED board temperature falls below a user-programmable threshold. Provide multiple steel ball-bearing fans that provide uniform airflow across the face panel. Program the field controller to activate the defog/defrost system whenever LED board temperature falls below +40 degrees F and to deactivate the defog/defrost system whenever LED board temperature exceeds +106 degrees F. Mount a 100-watt pencil-style heating element in front of each defog/defrost fan to warm the air directed across the DMS face. Design heating elements to be on only when the defog/defrost fans are on.

Install additional fans and/or heaters as needed to maintain the temperature inside the DMS enclosure within the operating temperature range of the equipment within the DMS enclosure as recommended by the equipment manufacturer(s).

14. Electrical Requirements

The requirements stated herein shall apply wherever electrical wiring is needed for any DMS system assemblies and subassemblies such as controller cabinet, DMS enclosure, electrical panel boards, etc.

Neatly arrange and secure the wiring inside the cabinet. Where cable wires are clamped to the walls of the control cabinet, provide clamps made of nylon, metal, plastic with rubber or neoprene protectors, or similar. Lace and jacket all harnesses, or tie them with nylon tie wraps spaced at 6 inches maximum to prevent separation of the individual conductors.

All conductors shall be individually and uniquely labeled. All conductor labels shall be clearly visible without moving the conductor. All terminal conductors shall connect to the terminal strip in right angles. Excess conductor shall be removed before

termination of the conductor. The conductor shall be molded in such a fashion as to retain its relative position to the terminal strip if removed from the strip. No conductor shall run across a work surface with the exception of connecting to that work surface. No conductor bundles can be supported by fasteners that support work surfaces. All connectors, devices, and conductors shall be installed in accordance to manufactures guidelines. All wiring shall comply with the latest NEC guideline in effect during installation. No conductor or conductor bundle may hang loose or create a snag hazard. All conductors shall be protected from damage. All solder joints shall be completed using industry accepted practices and shall not fail due to vibration or movement. All welds must be in a manner that will not fail due to vibration. Lamps and control boards shall be protected from damage.

Insulate all conductors and live terminals so they are not hazardous to maintenance personnel.

Route and bundle all wiring containing line voltage AC and / or shield it from all low voltage control circuits. Install safety covers to prevent accidental contact with all live AC terminals located inside the cabinet.

Use industry standard, keyed type connectors with a retaining feature for connections to the controller.

Provide one earth grounding lug that is electrically bonded to the sign housing.

Label all equipment and equipment controls clearly.

Supply each sign assembly with one complete set of wiring diagrams that identify the color-coding or wire tagging used in all connections.

Provide power supply monitoring circuitry to detect power failure in the DMS and to report automatically this fault to the control software. This requirement is in addition to reporting power failure at the controller cabinet.

(a) Lighting

Equip walk-in DMS enclosures with internal fluorescent lighting controlled with timers installed close to each inspection door. No light emitted from the fluorescent tubes or any other light source inside the enclosure not comprising the display shall leak to the outside of the enclosure.

(b) Convenience Outlets

Install GFCI duplex utility receptacles every 6 feet along the width of the DMS in convenient locations for powered service tools.

(c) Power Supply and Circuit Protection

Design the DMS and controller for use on a system with a line voltage of 120V ± 10% at a frequency of 60 Hz. ± 3 Hz. Under normal operation, do not allow the voltage drop between no load and full load of the DMS and its controller to exceed 3% of the nominal voltage.

Blackout, brownout, hunting, line noise, chronic over-voltage, sag, spike, surge, and transient effects are considered typical AC voltage defects. Protect the DMS system equipment so that these defects do not damage the DMS equipment or interrupt their operation. Equip all cabinets with devices to protect the equipment in the cabinet from damage due to lightning and external circuit power and current surges.

Protect the DMS sign, controller, accessories, and cabinet utilities with thermal magnetic circuit breakers. Provide the controller cabinet with a main circuit breaker sized according to the NEC. Use appropriately sized branch circuit breakers to protect the controller and accessories and for servicing DMS equipment and cabinet utilities.

(d) Surge Suppression

See the Cabinet Section of the Scope of Work for surge suppression equipment required in the DMS controller cabinet.

Install and clearly label filtering hybrid power line SPDs on the load side of the branch circuit breakers in a manner that permits easy servicing. Ground and electrically bond the surge protector to the cabinet within 2 inches.

Provide power line surge protector that meets the following requirements:

Peak surge current occurrences	20 minimum
Peak surge current for an 8 x 20 microsecond waveshape	50,000 amperes
Energy absorption	> 500 joules
Clamp voltage	240 volts
Response time	<1 nanosecond
Minimum current for filtered output	15 amperes for 120VAC*
Temperature range	-40°F to +158°F

* Capable of handling the continuous current to the equipment

15. DMS / DMS Controller Interconnect

Furnish and install all necessary cabling, conduit, and terminal blocks to connect the DMS and the DMS controller. Use approved manufacturer's specifications and project plans for cable and conduit types and sizes. Conduit shall not be mounted on the

exterior of the DMS structure. Conduits will be provided within the toll gantries for the DMS cabling and power supply.

16. DMS Controller

Furnish and install one DMS controller with accessories per DMS in a cabinet described in this Scope of Work. Provide the DMS controller as a software oriented microprocessor and with resident software stored in non-volatile memory. The control software, controller, and communications must comply with the NTCIP Standards identified in this Scope of Work. Provide sufficient non-volatile memory to allow storage of at least 500 multi-page messages and a test pattern program.

(a) Controller Address

Assign each DMS controller a unique address. Preface all commands from the control software with a particular DMS controller address. The DMS controller compares its address with the address transmitted and if the addresses match, then the controller processes the accompanying data.

(b) Controller Modes of Operation

Provide each controller with two possible modes of operation based on the point of control:

- Remote Mode: The control software controls DMS display. and
- Local Mode: An on-site operator controls DMS display using the LCP or a laptop computer.

The controller will report its operational mode status to the Control Software when polled.

(c) Controller Functions

Design the DMS controller to continuously control and monitor the DMS independent of the control software.

Design the controller to display on the sign a message sent by the control software, a message stored in the sign controller memory, or a message input on-site by an operator.

The control software can direct the controller to perform the following major tasks: create, edit, and / or delete messages and their parameters, stop or change the message being displayed, and perform diagnostic and test programs.

Provide the DMS controller with a watchdog timer to detect controller failures and to reset the microprocessor, and with a battery backed up clock to maintain an accurate time and date reference. Set the clock through an external command from the control software or the LCP.

(d) Controller Memory

Design each DMS controller with its local non-volatile memory. Use the non-volatile memory to store and reprogram at least one test pattern sequence and 500 messages containing a minimum of two pages of 45 characters per page. The Engineer will furnish the initial set of messages. Load these messages into both the control software library and the DMS controller's non-volatile memory. The control software can upload messages into and download messages from each controller's non-volatile memory remotely.

Messages uploaded and stored in the controller's non-volatile memory may be erased and edited using the control software and the controller. New messages may be uploaded to and stored in the controller's non-volatile memory using the control software and the controller. These actions shall be accomplished without removing the non-volatile memory from the controller and installing another non-volatile memory in the controller.

17. DMS Mini-Controller

Furnish and install a mini-controller inside the DMS that is interconnected with the main controller using a fiber-optic cable, CAT-5 cable, or an approved alternate. The mini-controller will enable a technician to perform all functions available from the main controller. Provide the mini-controller with an LCD/keypad interface. Size the LCD display screen to allow preview of an entire one-page message on one screen. Provide a 4 X 4 keypad.

Alternatively, install an EIA/TIA-232E port inside the DMS enclosure to enable a maintenance technician to communicate with the DMS main controller, obtain access to, and perform all functions of the main controller.

18. NTCIP Requirements

This portion of the specification defines the detailed NTCIP requirements for the DMS signs covered by this Scope of Work.

(a) References

This specification references several standards through their NTCIP designated names. The following list provides the full reference to the current version of each of these standards.

Implement the most recent version of the standard including any and all approved or recommended amendments to these standards for each NTCIP component covered by these project specifications.

Table 1: NTCIP Standards		
Abbreviated Number	**Full Number**	**Title**
NTCIP 1101	NTCIP 1101:1997	Simple Transportation Management Framework
NTCIP 1201	NTCIP 1201:1997	Global Object Definitions
NTCIP 1203	NTCIP 1203 v03:2009	Object Definitions for Dynamic Message Signs
NTCIP 2001	NTCIP 2001:1997	Class B Profile
NTCIP 2101	NTCIP 2101	SP-PMPP/232 Subnet Profile for PMPP over RS-232
NTCIP 2103	NTCIP 2103	SP-PPP/232 Subnetwork Profile for PPP over RS232 (Dial Up)
NTCIP 2104	NTCIP 2104	SP-Ethernet Subnet Profile for Ethernet
NTCIP 2201	NTCIP 2201	TP-Null Transport Profile
NTCIP 2202	NTCIP 2202	TP-Internet Transport Profile (TCP/IP and UDP/IP)
NTCIP 2301	NTCIP 2301	AP-STMF AP for Simple Transportation Management Framework

Note: this project features color signs with the ability to post graphics. The color DMS signs shall comply with NTCIP Standard 1203 Object Definitions for Dynamic Message Signs version 02, dated 2007. Comply with all mandatory objects pertaining to the displaying and monitoring of graphics and color messages. Comply with all optional objects necessary to support the displaying and monitoring of graphics and color messages.

(b) General Requirements

i. Subnet Level

Ensure NTCIP components support NTCIP 2104.

NTCIP Components may support additional Subnet Profiles at the manufacturer's option. At any one time, only one Subnet Profile shall be active on a given serial port of the NTCIP Component. Ensure the NTCIP Component can be configured to allow the field technician to activate the desired Subnet Profile and provide a visual indication of the currently selected Subnet Profile.

ii. Transport Level

Additionally, NTCIP components shall support NTCIP 2104.

NTCIP Components may support additional Transport Profiles at the manufacturer's option. Ensure Response datagrams use the same Transport

Profile used in the request. Ensure each NTCIP Component supports the receipt of datagrams conforming to any of the identified Transport Profiles at any time.

iii. Application Level

Ensure each NTCIP Component complies with NTCIP 1103 and meets the requirements for Conformance Level 1 (NOTE - See Amendment to standard). Ensure each NTCIP Component supports SNMP traps. An NTCIP Component may support additional Application Profiles at the manufacturer's option. Ensure responses use the same Application Profile used by the request. Ensure each NTCIP Component supports the receipt of Application data packets at any time allowed by the subject standards.

iv. Information Level

Each NTCIP Component shall provide Full, Standardized Object Range Support of all objects required by these procurement specifications unless otherwise indicated below. The maximum Response shall be 100 milliseconds plus one millisecond per each byte in the response bindings field.

Design the DMS to support all mandatory objects of all mandatory Conformance Groups as defined in NTCIP 1201 and NTCIP 1203 v02: 2007. Table 2 indicates the modified object requirements for these mandatory objects.

Table 2: Modified Object Ranges for Mandatory Objects

Object	Reference	Project Requirement
ModuleTableEntry	NTCIP 1201 Clause 2.2.3	Contains at least one row with moduleType equal to 3 (software). The moduleMake specifies the name of the manufacturer, the moduleModel specifies the manufacturer's name of the component, and the modelVersion indicates the model version number of the component.
MaxGroupAddresses	NTCIP 1201 Clause 2.7.1	At least 1
CommunityNamesMax	NTCIP 1201 Clause 2.8.2	At least 3
DmsNumPermanentMsg	NTCIP 1203 Clause 2.6.1.1.1.1	At least 1*
DmsMaxChangeableMsg	NTCIP 1203 Clause 2.6.1.1.1.3	At least 21
DmsFreeChangeableMemory	NTCIP 1203 Clause 2.6.1.1.1.4	At least 700,000 bytes when no messages are stored.

Table 2: Modified Object Ranges for Mandatory Objects		
Object	**Reference**	**Project Requirement**
DmsMessageMultiString	NTCIP 1203 Clause 2.6.1.1.1.8.3	The DMS supports any valid MULTI string containing any subset of those MULTI tags listed in Table 4
DmsControlMode	NTCIP 1203 Clause 2.7.1.1.1.1	Support at least the following modes: local, central and central override

* Ensure the Permanent Messages display the content shown in Table 3.

Table 3: Required MULTI Tags	
Code	**Feature**
f1	field 1 - time (12hr)
f2	field 2 - time (24hr)
f8	field 8 – day of month
f9	field 9 – month
f10	field 10 - 2 digit year
f11	field 11 - 4 digit year
fl (and /fl)	Flashing text on a line-by-line basis with flash rates controllable in 0.5-second increments.
fo	Font
jl2	Justification – line – left
jl3	Justification – line – center
jl4	Justification – line – right
jl5	Justification – line – full
jp2	Justification – page – top
jp3	Justification – page – middle
jp4	Justification – page – bottom
Mv	moving text
Nl	new line
Np	new page, up to 2 instances in a message (i.e., up to 3 pages/frames in a message counting first page)
Pt	Page times controllable in 0.5-second increments.

The NTCIP Component implements all mandatory and optional objects of the following optional conformance groups with FSORS.

v. Test Heading

Time Management - As defined in NTCIP 1201

Timebase Event Schedule - As defined in NTCIP 1201. The following list indicates the modified object requirements for this conformance group.

Table 4: Modified Object Ranges for the Timebase Event Schedule Conformance Group		
Object	**Reference**	**Project Requirement**
MaxTimeBaseScheduleEntries	NTCIP 1201 Clause 2.4.3.1	At least 28
maxDayPlans	NTCIP 1201 Clause 2.4.4.1	At least 14
maxDayPlanEvents	NTCIP 1201 Clause 2.4.4.2	At least 10

Report - As defined in NTCIP 1103v02-10b. The following list indicates the modified object requirements for this conformance group.

Table 5: Modified Object Ranges for the Report Conformance Group		
Object	**Reference**	**Project Requirement**
maxEventLogConfigs	NTCIP 1103 Clause A.7.4	At least 50
eventConfigurationMode	NTCIP 1103 Clause A.7.5.1.3	The NTCIP Component supports the following Event Configuration Modes: other, onChange, greaterThanValue, smallerThanValue, hysteresisbound, periodic and addedWithValue.
MaxEventLogSize	NTCIP 1103 Clause A.7.6	At least 200
MaxEventClasses	NTCIP 1103 Clause a.7.5.12	At least 255

Font Configuration -As defined in NTCIP 1203. The following list indicates the modified object requirements for this conformance group.

Table 6: Modified Object Ranges for the Font Configuration Conformance Group		
Object	**Reference**	**Project Requirement**
NumFonts	NTCIP 1203 Clause 2.4.1.1.1.1	At least 4*
MaxFontCharacters	NTCIP 1203 Clause 2.4.1.1.1.3	At least 127**

* Upon delivery, the first font is a standard 18" font. The character set for the first three fonts are defined in NEMA TS-4 section 5.6.1. The second font is a double-stroke 18" font. The third font is a 28" font. The fourth font is empty.

DMS Configuration - As defined in NTCIP 1203.

MULTI Configuration - As defined in NTCIP 1203. The following list indicates the modified object requirements for this conformance group.

Table 7: Modified Object Ranges for the MULTI Configuration Conformance Group		
Object	**Reference**	**Project Requirement**
DefaultBackgroundColor	NTCIP 1203 Clause 2.5.1.1.1.1	The DMS supports the following background colors: black
DefaultForegroundColor	NTCIP 1203 Clause 2.5.1.1.1.2	The DMS supports the following foreground colors: amber
DefaultJustificationLine	NTCIP 1203 Clause 2.5.1.1.1.6	The DMS supports the following forms of line justification: left, center, right and full
defaultJustificationPage	NTCIP 1203 Clause 2.5.1.1.1.7	The DMS supports the following forms of page justification: top, middle and bottom
defaultCharacterSet	NTCIP 1203 Clause 2.5.1.1.1.10	The DMS supports the following character sets: eightBit

Default Message Control - As defined in NTCIP 1203.

MULTI Error Control - As defined in NTCIP 1203.

Illumination/Brightness Control - As defined in NTCIP 1203. The following list indicates the modified object requirements for this conformance group.

Table 8: Modified Object Ranges for the Illumination/Brightness Control Conformance Group		
Object	**Reference**	**Project Requirement**
dmsIllumControl	NTCIP 1203 Clause 2.8.1.1.1.1	The DMS supports the following illumination control modes: photocell, timer and manual
dmsIllumNumBrightLevels	NTCIP 1203 Clause 2.8.1.1.1.4	At least 16

Scheduling - As defined in NTCIP 1203. The following list indicates the modified object requirements for this conformance group.

Table 9: Modified Object Ranges for the Scheduling Conformance Group		
Object	**Reference**	**Project Requirement**
NumActionTableEntries	NTCIP 1203 Clause 2.9.1.1.1.1	At least 21

Sign Status - As defined in NTCIP 1203.

Status Error - As defined in NTCIP 1203.

Pixel Error Status - As defined in NTCIP 1203.

Climate Control Status -As defined in NTCIP 1203.

Power Status - As defined in NTCIP 1203.

Temperature Status - As defined in NTCIP 1203. Install necessary hardware for the support of items above.

Table 10: Optional Object Requirements

Object	Reference	Project Requirement
DmsMultiOtherError Description	NTCIP 1203 Clause 2.7.1.1.1.20	If the vendor implements any vendor-specific MULTI tags, the DMS shall provide meaningful error messages within this object whenever one of these tags generates an error.

(C) CONSTRUCTION METHODS

1. Description

This article establishes practices and procedures and gives minimum standards and requirements for the installation of Dynamic Message Sign systems, auxiliary equipment, and the construction of related structures.

Provide electrical equipment described in this Scope of Work that conforms to the standards of NEMA, UL, or Electronic Industries Association (EIA), wherever applicable. Provide connections between controllers and electric utilities that conform to NEC standards. Express wire sizes according to the American Wire Gauge (AWG).

Provide stainless steel screws, nuts, and locking washers in all external locations. Do not use self-tapping screws unless specifically approved by the Engineer. Use parts made of corrosion resistant materials, such as plastic, stainless steel, brass, or aluminum. Use construction materials that resist fungus growth and moisture deterioration. Separate dissimilar metals by an inert dielectric material.

2. Layout

The Design-Build Team shall be responsible for the proper elevation, offset, level, and orientation of all DMS assemblies on the structures provided by others. Make actual field measurements to place conduit and equipment at the required location. Mark the proposed location of circuits and all other components for the Engineer's approval prior to installation. Submit a drawing showing all underground conduits and cables dimensioned from fixed objects or station marks.

3. Structural Requirements

(a) General

Provide stainless steel screws, nuts, and locking washers in all external locations. Do not use self-tapping screws unless specifically approved by the Engineer. Use parts made of corrosion resistant materials, such as plastic, stainless steel, brass, or aluminum. Use construction materials that resist fungus growth and moisture deterioration. Separate dissimilar metals by an inert dielectric material.

No welding, cutting, or drilling in any manner will be permitted in the field, unless approved by the Engineer.

Drill boltholes and slots to finished size. Holes may also be punched to finished size, provided the diameter of the punched holes is at least twice the thickness of the metal being punched. Flame cutting of boltholes and slots will not be permitted.

Use two coats of a zinc rich paint to touch up minor scars on all galvanized materials.

(b) Access Platform for Walk-in DMS

Provide an access platform, a minimum of three feet wide, as measured parallel with the edge of the roadway, with open skid resistant surface and safety railing, on the DMS assembly for access to the DMS inspection door. Provide platforms with fixed safety railings along both sides from the beginning of the platform to the inspection door. The access platform shall attach only to the structure.

Connect the platform sections rigidly where sections join to avoid an uneven walking surface.

Install a 4”x 4” safety angle parallel to and along both sides of the platform and extend it the entire length of the platform. Design the safety angle to withstand loading equivalent to the platform.

(c) Direct Tension Indicators

Use direct tension indicators on all ASTM A325 high strength bolt connections in mainline toll gantry, overhead sign structures, and cantilever sign structures.

Provide direct tension indicators that conform to this Scope of Work, the requirements of ASTM F959 and the manufacturer's recommendations.

Install the direct tension indicators in strict compliance with the manufacturer's written instructions.

Install the direct tension indicator under the bolt head normally. If it is necessary to install the direct tension indicator under the nut, or if the bolt head must be turned, install additional hardened washers in accordance with the manufacturer's instructions.

Have a tension-indicating device on the project for determining the tension imposed on a fastener when the protrusions on direct tension indicator have been properly compressed.

Test three samples from each lot of direct tension indicators in the presence of the Engineer. Achieve a minimum bolt tension 5 percent greater than that required by Table 440-1 in Article 440-8 of the *Standard Specifications*. Do not substitute direct tension indicators for the hardened steel washers required with short slotted or oversized holes, but you may use them in conjunction with them.

Initially install the direct tension indicators to a snug tight condition as specified in Subarticle 440-8 (C) (5) of the *Standard Specifications*. After the initial tightening, fully tighten the fasteners, as recommended by the manufacturer of the direct tension indicators, beginning at the most rigid part of the joint and continuing toward its free edges.

Use a wrench to tighten fasteners containing direct tension indicators of the type and capacity recommended by the manufacturer and which is clean and lubricated. Use an air supply and hoses that are in good condition and provide air pressure of at least 100 psi at the wrench.

Perform any heating of structural steel required for corrections near fasteners before direct tension indicators are installed.

(d) Inspection

The Engineer will inspect for correct tightening of bolts by inserting a 0.005-inch thickness feeler gauge into the openings between adjacent flattened protrusions of the direct tension indicator. The tension is correct when the number of spaces the gage cannot enter is equal to or greater than the value shown in the table below.

Number of Spaces in Washer	Number of Spaces Gage is Refused
4	2
5	3
6	3
7	4

The gage must not be able to enter any spaces when the direct tension indicator is used under the turned element.

Do not tighten bolts to a no visible gap condition. Replace bolts that have a direct tension indicator with no visible gap and tighten the bolts with a direct tension indicator.

The Engineer will inspect at least 10 percent, but no less than 2, of the bolts in each connection, using the metal feeler gages provided by the Design-Build Team.

Ensure that the part of the fastener being restrained from turning does not rotate during the tightening process, thereby abrading away a portion of the direct tension indicator protrusions.

Ensure that none of the direct tension indicator protrusions is accidentally partially flattened before installing in the structural steel joints.

Do not reuse direct tension indicators. If it becomes necessary to loosen a bolt previously tensioned, discard and replace the direct tension indicator.

(e) Equipment and Cabinet Mounting

Mount equipment securely at the locations shown in the ITS Concept Plans, in conformance with the dimensions shown, and plumb and level. Install fasteners as recommended by the manufacturer and space them evenly. Use all mounting holes and attachment points for attaching DMS enclosures (and controller cabinets, if required) to structures.

Drill holes for expansion anchors of the size recommended by the manufacturer of the anchors and thoroughly clean them of all debris.

Seal all unused conduit installed in cabinets at both ends to prevent water and dirt from entering the conduit and cabinet with approved sealing material.

Install a ground bushing attached inside the DMS cabinet on all metal conduits entering the DMS cabinet. Connect these ground bushings to the cabinet ground bus.

4. Electrical Requirements

Provide electrical equipment described herein that conforms to the standards of NEMA, UL, or Electronic Industries Association (EIA), wherever applicable. Provide connections between controllers and electric utilities that conform to NEC standards. Express wire sizes according to the American Wire Gauge (AWG).

(a) Conduit

Install the conduit system in accordance with Section 1715 of *Standard Specifications* and NEC requirements for an approved watertight raceway. Mount the conduit on the horizontal truss in such a manner to be hidden from approaching traffic.

Make bends in the conduit so as not to damage it or change its internal diameter. Install watertight and continuous conduit with as few couplings as standard lengths permit.

Clean conduit before, during, and after installation. Install conduit in such a manner that temperature changes will not cause elongation or contraction that might damage the system.

Attach the conduit system to and install along the structural components of the DMS structure assembly with beam clamps or stainless steel strapping. Install strapping according to the strapping manufacturer's recommendations. Do not use welding or drilling to fasten conduit to structural components. Space the fasteners at no more than four feet for conduit 1.5 inches and larger, or 6 feet for conduit 1.25 inches and smaller. Place fasteners no more than 3 feet from the center of bends, fittings, boxes, switches, and devices.

Locate underground conduit as shown in the Plans in a manner consistent with these Scope of Work.

Do not exceed the appropriate fill ratio on all cable installed in conduit as specified in the NEC.

(b) Wiring Methods

Do not pull permanent wire through a conduit system until the system is complete and has been cleaned.

Color-code all conductors per the NEC (grounded neutral-WHITE, grounding-BARE or GREEN, and phase conductors RED and BLACK). Use approved marking tape, paint, sleeves or continuous colored conductors for No.8 AWG and larger. Do not mark a white conductor in a cable assembly any other color. You may strip white, red, or black conductor at all accessible points and use it as a bare equipment-grounding conductor.

Bury underground circuits at the depth shown in the plans and surround with at least 3 inches of sand or earth back-fill free of rocks and debris. Compact backfill in 6-inch layers. Do not splice underground circuits unless specifically noted in the plans.

(c) Cabinet and System Grounding

Ground the DMS enclosure and DMS structure per Sections 1098 and 1700 of the *Standard Specifications*, applicable addenda, the ITS Standard Details, and this Scope of Work. Provide grounding circuits that are permanent and electrically continuous with a current carrying capacity high enough and an impedance low enough to limit the potential above ground to a safe level.

Make connections between ground electrodes and the ground wire using an exothermic welding process, cadweld or equivalent.

Ensure completed cabinet grounds have a resistance to ground of not more than 20 Ohms.

5. Work Site Clean-Up

Clean the site of all debris, excess excavation, waste packing material, wire, etc. Clean and clear the work site at the end of each workday. Do not throw waste material in storm drains or sewers.

6. Limits of Manufacturer's Proprietary Information

NCTA's electronics technicians will use the above documentation (schematics, drawings, software, firmware, manuals, etc.) exclusively for the following purposes: diagnosing and performing repairs on malfunctioning equipment, equipment circuit boards, and malfunctioning systems; operational test of repaired equipment, circuit boards, systems; and performing authorized upgrades to equipment, circuit boards, and software supplied under this contract. NCTA electronics technicians will not use or copy devices or software for any purpose other than diagnosis, repair, and testing or to perform authorized firmware or software upgrades.

Upon notification by the manufacturer, the Authority agrees not to divulge any proprietary or otherwise confidential information contained in the above-required documentation. NCTA agrees to protect and secure any proprietary documentation identified by the manufacturer as proprietary or confidential. Upon request by the manufacturer, NCTA agrees to sign a binding non-disclosure agreement with the manufacturer or other business that is providing documentation it considers proprietary or otherwise confidential.

7. Testing and Integration

Integrate the DMS signs into *Smartlink* as described in this Scope of Work. Conduct testing upon completion of all work as described in the Testing and Acceptance Section of this Scope of Work.

ROAD WEATHER INFORMATION SYSTEM

(A) GENERAL

Furnish and install a road weather information system (RWIS) for detection of certain weather and visibility conditions that would adversely affect traffic. The RWIS shall be capable of measuring wind speed and direction, temperature and humidity, precipitation presence, atmospheric pressure, and the presence of water, ice, slush, snow, and frost on road surfaces. The final location is the responsibility of the Design-Build Team. A location has been identified suggested near the west side of the Catawba River. Use the FHWA "Road Weather Information System Environmental Sensor Station Siting

Guidelines, Version 2.0", dated November 2008 for positioning of the RWIS site. The location of the RWIS shall not encroach in the clear zone. The RWIS shall be sited so the tower or pole can be lowered without requiring a lane or shoulder closure. Locate the RWIS to minimize vandalism.

The system shall use Ethernet communications for monitoring and control from the STOC and the MRTMC. The system shall be able to be monitored from any *Smartlink* workstation.

(B) MATERIALS

1. General

Provide an RWIS consisting of an environmental sensor station (ESS) installed as shown in the ITS Concept Plans and as directed by the Engineer. Provide an ESS that includes environmental sensors mounted on an aluminum tripod tower and a remote processing unit (RPU) at the tower's base, if required for that location. Ensure that the RPU can collect, store, and process sensor data to describe current weather conditions.

Provide any ancillary equipment or incidental items required, including mounting hardware, power supplies, grounding, surge suppression devices, and communication equipment, at the ESS location to make a complete and fully operational RWIS. Ensure that the system provides real-time, accurate, reliable data on all system parameters to the degree of precision defined in this Scope of Work.

2. Sensors

Provide an ESS that can collect, store, and transmit data from the following sensors:

- A sonic anemometer to measure wind speed and direction,
- A thermoresistor to measure temperature,
- An integrated circuit to measure humidity,
- A capacitance sensor to measure presence of precipitation,
- A pressure transducer (silicon chip) to measure atmospheric pressure, and
- Non-intrusive laser spectroscopy sensors to detect the presence of water, ice, slush, snow, or frost on road surface.

3. Sensor Performance

Each environmental sensor and its associated transducers shall record the following attributes to the listed degree of accuracy:

Roadway Data	
Surface Temperature	±0.36 degrees F between -40 degrees and 150 degrees F
Precipitation	Type: Dry, wet, ice, slush, snow and frost
Atmospheric Data	
Temperature	±1 degrees F between -40 degrees and 176 degrees F; resolution of 0.1 degree

Relative Humidity at 70° F	±5% between 10 and 100%	
Barometric Pressure	Accurate to ±0.02 inch of mercury (in. Hg) between 26 and 32 in. Hg; resolution of 0.005 inches Hg	
Precipitation	Presence	
Wind	Direction:	±3 degrees between 0 and 360 degrees
	Speed:	±1 mph between 0 and 100 mph, with gusts up to 180 mph

4. RPU

Furnish an RPU that supports a minimum of eight pavement sensors. Use an RPU that supports EIA 232/485 serial protocols, as well as TCP/IP output. Ensure that the RPU is programmable and based on an open architecture.

Provide a unit having a minimum of ten EIA-232 serial ports. Ensure that the RPU has a maximum serial data transmission rate of 128 kbps. Ensure that the unit's mean time between failures (MTBF) is 15,000 hours or 625 days.

Ensure that the RPU issues and communicates an alarm whenever a user-defined threshold is exceeded. Ensure that the RPU is also capable of producing an output through contact closure or a digital output that imitates a contact closure.

At minimum, the RPU shall be able to store internally the last 24-hour readings over a user defined time interval of up to 5 minutes.

Ensure that the RPU operates using a nominal input voltage at the cabinet of 110 to 120 $V_{AC.}$; The RPU must be capable of operating on 12 V_{DC} of solar battery power. The RPU shall issue an alarm to the TMC if the AC power supply is lower than acceptable operating conditions or if there has been a complete power loss. Ensure that the system sends a message when the unit returns to normal conditions.

All components within the RPU shall operate throughout an ambient operating temperature range of -40 degrees to 160 degrees F, with a maximum relative non-condensing humidity of 90%.

5. Communications

Use an RPU capable of transmitting all collected data to the TMC using the National Transportation Communications for ITS Protocol (NTCIP) over Ethernet communications over single-mode fiber-optic cable that transfers data at a minimum rate of 10 megabits per second (Mbps).

6. Configuration and Management

Ensure that the *Smartlink* software application provides desktop display of the RWIS location on a map of the Garden Parkway. Ensure that the software enables the system

operator to derive environmental measurements, such as the dew point, wind chill, and heat index, from sensor data received. Ensure that the software can be used to report minimums, maximums, averages, cumulative values, and standard deviations for all data over a prescribed period.

Ensure that the software provides English-to-metric unit conversions, when applicable, and lets the operator choose which unit of measure to report if more than one unit is common for a particular measurement.

Ensure that the operator is able to access, either remotely through an STOC or MRTMC workstation or at the site with the laptop computer, all user-defined parameters, and stored data within the RPU, including the ability to view, download, and delete stored data.

Ensure that the laptop computer and the RWIS can communicate when connected directly by a cable connected to the laptop's USB port. Ensure that the laptop computer and RWIS can communicate across the ITS system's communication network using the NTCIP standards described in this Scope of Work.

7. Electrical Requirements

Provide RWIS equipment and components installed at the ESS that operate at 110 to 120 V_{AC} from a commercial utility company. Equip the ESS installation with emergency backup power in the event of primary power loss. Ensure that backup power is capable of continuing ESS operations for a minimum of 12 hours.

8. Foundation and Tower Requirements

Provide a supporting tower or pole that provides a mounting platform for atmospheric sensors free of influences from topography, buildings, and vehicles. Ensure that the tower also supports any lightning protection devices (e.g., grounding rods) for the site. Mount the atmospheric sensors on a hinged, 30-foot (minimum) tower. Use a tower having a hinge approximately 10 feet above ground for access to the atmospheric sensors.

Provide a support structure that is self-supporting without guy wires, using a 50-year design life, and in accordance with the 5th Edition 2009 AASHTO "Standard Specifications for Structural Supports for Highway Signs, Luminaires, and Traffic Signals, including all of the latest interim revisions (25-year reoccurrence). Ensure that the structure is made of 6061-T6 corrosion-resistant aluminum or an equivalent. Ensure that all hardware and fasteners are stainless steel.

Provide a fence to enclose the ESS.

(C) CONSTRUCTION METHODS

Install, configure and demonstrate the fully functional RWIS installation as shown in the ITS Concept Plans. Connect all field hardware to the communication network, and provide

all materials specified in the Contract Documents. Install all equipment according to the manufacturer's recommendations or as directed by the Engineer.

Ensure that all equipment and materials furnished, assembled, fabricated, or installed are commercial off-the-shelf products.

Unless detailed otherwise in the ITS Concept Plans, mount all atmospheric sensors except anemometers at cabinet-top height, approximately 10 feet above grade. Mount anemometers at the top of the tower. If local restrictions prevent installing the anemometers at the top, install them no less than 20 feet above the ground.

Construct the enclosure fence as shown in the ITS Concept Plans. Locate the gate so the tower assembly can be lowered to the ground without hitting the fence.

Install all wiring so that it is either internal to a pole, in conduit attached to truss members, or contained in underground conduit.

ETHERNET COMMUNICATIONS CABLE

(A) DESCRIPTION

Furnish and install copper Ethernet cable for interconnecting various hardware in an Ethernet network located in ITS device cabinets, and AET vaults.

(B) MATERIALS

1. Ethernet Cable

Provide Category 6 Ethernet cable, complying with ANSI/TIA-568-B.2-1 standards for four-pair unshielded twisted copper. Size the wire gauge for the installation. The cable shall meet all of the mechanical requirements of ANSI/ICEA S-80-576 applicable to four-pair inside wiring cable for plenum or general cabling within a building.

2. Connectors

Provide RJ-45 connectors with gold wire conductors terminated according EIA/TIA-568-A/568-B standards. Provide factory terminations to the fullest extent possible. Provide connectors with eight contacts. Furnish connectors appropriately rated for the cable being installed.

3. Ethernet Patch Cords

Furnish Fast Ethernet patch cords meeting the following physical requirements:

- Minimum of five (5)-foot length,
- Category 6,
- RJ-45 connectors on both ends,
- Molded anti-snag hoods over connectors, and
- Gold plated connectors.

Patch cords in the STOC shall be of sufficient length to make connection when installed in cable management hardware without straining the cable or connectors.

Furnish Ethernet patch cords meeting TIA/EIA-568-B.2-1, Additional Transmission Performance Specifications for 4-pair 100 Ω Enhanced Category 6 Cabling.

(C) CONSTRUCTION METHODS

1. General

Install Category 6 Ethernet cable for all network cabling in the AET vaults. Install Category 6 Ethernet patch cords in the AET vaults.

Provide the Engineer through Constructware with the Ethernet cable manufacturer's recommended and maximum pulling tension for each Ethernet cable size before the installation of Ethernet cable.

Furnish all tools, equipment, materials, supplies, and hardware necessary to install a fully operational Ethernet cable system. Install the Ethernet cable according to the latest version of the manufacturer’s cable installation procedures and the industry accepted installation standards, codes, and practices, or as directed by the Engineer.

Take all precautions necessary to ensure the Ethernet cable is not damaged during storage and installation. Do not step on the cable nor run over the cable with equipment. Do not pull the cable over or around obstructions.

Install Ethernet cable in continuous lengths. Cut cables to length to minimize coils of spare cable. Cut outer jacket and trim conductors per manufacturer’s recommendations. Ensure all conductors extend to the end of the channel and make solid electrical contact with the gold connectors. Crimp the RJ-45 connector body to lock conductors in channels.

2. Building Installation

Do not exceed 80 percent of the manufacturer's maximum pulling tension when installing underground Ethernet cable.

Provide bushings and cable guides to protect the cable. Manually feed the cable by rotating the reel.

COMMUNICATIONS RACK

(A) DESCRIPTION

Furnish and install one open, non-lockable, 19-inch communications with no side panels in each AET mainline vault. Install the racks in locations as directed by the Engineer. Coordinate with the Toll Integrator on the make and model of the rack. The Contractor

may provide the same make and model rack provided by the Toll Systems Integrator as an alternative to these Project Special Provisions.

(B) MATERIALS

Provide all communications rack meeting these minimum performance requirements:

- All equipment shall comply with ANSI/EIA RS-310D,
- Provide frame and external components with zinc coating per ASTM B633, and
- Paint interior and exterior components per RAL 7035.

Provide all communications racks meeting the following minimum material requirements:

- 19-inch EIA single-bay
- Nominal height of 78 inches less base
- Nominal 4-inch high ventilated base
- Depth: 31 inches
- House 42 units of rack space
- All-metal components

Vented top with three integral prewired fans, and fans that provide up to 300 cubic feet per minute (cfm) of exhaust.

Mechanical: Construct all rack frames from 12-gauge, cold-formed steel. Construct the vented base from 16-gauge steel. Construct the 19-inch electrical rack angles from 12-gauge steel.

Furnish and install one metal shelf kit per each rack. Provide each shelf the full width and depth of the rack angles and attach directly to the rack angles. Furnish and install one metal keyboard slide out drawer per each rack.

(C) CONSTRUCTION METHODS

Finish: Furnish factory-applied paint on the exterior of all components with a color that matches that of the respective room they are located. Submit color samples to the Authority for review and approval.

Electrical: Furnish and install an outlet strip and 10-foot power cord along one rear vertical rack frame. Furnish and install strips that use 120 VAC 60 Hz power and shall contain at least 10 outlets over the 70 inches. Furnish and install grounding bus bar system for the ground rack mounted electrical equipment. Equip door with grounding studs.

Furnish and install cable management hardware for attachment vertically along the rack frame and horizontally between 19-inch rack angles. Cable management hardware shall run vertically up one rear rack frame and shall include six horizontal runs per rack. Provide hardware including cable organizers and clamps to provide strain relief and cable mounting.

Keyboard Shelf: Install keyboard shelf at a height comfortable for operator use when sitting on a stool. Provide tamper-resistant but removable screws through hinges and exterior panels. Furnish any special tools required to remove tamper resistant screws.

Ground the racks to a building ground.

COMMUNICATIONS HARDWARE

(A) DESCRIPTION

1. General

All communications between ITS devices and the local hub shall use Ethernet communications. The communications network along the corridor shall consist of local Ethernet edge switches at ITS devices, and Gigabit Ethernet routing switches as shown in the ITS Concept Plans. The field Gigabit Ethernet routing switches will act as data aggregation and data distribution nodes for Ethernet edge switches located at all ITS device sites. Gigabit Ethernet routing switches located in the AET mainline vaults at each end of the corridor will communicate with the CSC and then to the STOC via two leased circuits (provided by the Toll System Integrator) operating from each end of the corridor. The routing switch located in the easternmost AET mainline vaults will communicate with the MRTMC via a direct connection with NCDOT Hub 6 near the I-485/I-85 interchange. See Sheet 1 of 3 of the ITS Special Details.

Provide a minimum of a Fast Ethernet (100 Mbps) optical communications network between all proposed ITS field devices and Gigabit Ethernet routing switches located in the AET vaults located at the toll zones.

Provide an optical Gigabit Ethernet (minimum of 1 Gbps) communications network between the Gigabit Ethernet routing switches using proposed single-mode fiber-optic cable along the project corridor.

Between the project corridor and the CSC and STOC provide the capability of an optical Gigabit Ethernet (minimum of 1 Gbps) communications network, using media by others.

Provide additional blades on NCDOT Gigabit switches located at Hub 6 and the MRTMC.

2. Gigabit Ethernet Routing Switches

Furnish and install a Layer 3 Gigabit Ethernet routing switch in at least three of the mainline AET Vaults. The Design-Build Team shall determine the layout of the network and choose which AET Vaults will house the routing switches, and submit to NCTA for approval.

Ensure that the routing switches provide Gigabit Ethernet connectivity at minimum transmission rates of 1 Gbps between the Gigabit Ethernet routing switches. The routing switch shall have the capability to be upgraded to 10 Gigabit Ethernet.

3. Ethernet Edge Switches

Furnish and install a hardened, device-level managed field Ethernet edge switch in each ITS field cabinet location. Ensure that the Ethernet edge switches provide fast Ethernet connectivity at minimum transmission rate of 100 Mbps from each ITS cabinet location to its respective Gigabit Ethernet routing switch.

4. Network Management Software

For the communications network, utilize the existing network management software (NMS) for configuration, troubleshooting, security, and system monitoring. The Design-Build Team shall perform the initial system integration of all Gigabit Ethernet routing, and Ethernet edge switches installed on the project. Integration shall include but not be limited to the following:

- Add the required devices to the NMS database
- Add the required devices to the network topology map
- Configure performance monitoring and email alerts

(B) MATERIALS

1. General

Ensure that the Ethernet switches are fully compatible and interoperable with the trunk Ethernet network interface and that the Ethernet switches support half and full duplex Ethernet communications.

Furnish Ethernet switches that provide 99.999% error-free operation and that comply with the Electronic Industries Alliance (EIA) Ethernet data communication requirements using single-mode fiber-optic transmission medium and copper transmission medium. Ensure that the Ethernet switches have a minimum mean time between failures (MTBF) of 10 years, or 87,600 hours, as calculated using the Bellcore/Telcordia SR-332 standard for reliability prediction.

2. Gigabit Ethernet Routing Switches

To ensure maximum interoperability within the Gigabit network, provide Gigabit Ethernet routing switches from the same manufacturer. Ensure compatibility with existing core switch make and model in STOC and MRTMC. Provide one of the following make/models of switch, or approved equal:

Cisco Catalyst 4506-E, Brocade (Foundry) FastIron SuperX, Juniper EX8208, Extreme Networks Black Diamond 8806.

The Gigabit Ethernet Network, which includes all Gigabit Ethernet Routing Switches, shall be a routed network. The Contractor shall configure each Layer 3 routing switch with industry standard, non-proprietary routing protocols identified in the Contractor-provided network documentation as outlined below.

The switch shall be furnished with the following at a minimum:

- Optical I/O Blade with a minimum of 24 Gigabit Ethernet SFP ports
- 100/1000 Base-T Copper I/O Blade with a minimum of 24 ports
- Redundant Management Blades
- Redundant Load Sharing Power Supplies

The management blade(s) shall support the following:

- Minimum switching capacity: 280 Gbps
- IPv4 Throughput: 225 Mpps
- IPv6 Throughput: 110 Mpps
- 10-Gigabit Upgradeable
- Layer 2 Features:
  - MSTP (Multiple Spanning Tree Protocol)
  - RSTP (Rapid Spanning Tree Protocol)
  - IEEE 802.1X (Port-based Access Control)
- Full Layer 3 Features (including but not limited to):
  - OSPF (Open Shortest Path First)
    - Support a minimum of 4000 routes in hardware
  - PIM-SM (Protocol Independent Multicast – Sparse Mode)
  - PIM-DM (Protocol Independent Multicast –Dense Mode)
  - VRRP (Virtual Router Redundancy Protocol)
  - IGMPv3 (Internet Group Management Protocol)

The protocols to be configured by the Contractor shall include at a minimum:

- OSPF (Open Shortest Path First)
- PIM-SM / PIM-DM (Protocol Independent Multicast – Sparse Mode / Dense Mode)
- VRRP (Virtual Router Redundancy Protocol)
- SNMPv3 (Simple Network management Protocol
- SNTP (Simple Network Time Protocol
- MSTP (Multiple Spanning Tree Protocol) / RSTP (Rapid Spanning Tree Protocol) or similar approved Layer 2 loop prevention protocol
- IGMP (Internet Group Management Protocol)

The Contractor shall submit all configurations to the Engineer for review and approval prior to implementation.`

3. Ethernet Edge Switches

Provide one of the following make/models of switch or approved equal:

RuggedCom RS900, GarrettCom Magnum 6KL, Etherwan EX71000, EX72000, or EX73000, Cisco Catalyst 2955S-12, and ITS Express 8040.

The Contractor shall configure each Layer 2 edge switch with industry standard, non-proprietary protocols identified in the Contractor-provided network documentation as outlined below. The protocols to be configured by the Contractor shall include at a minimum:

- RSTP / MSTP
- SNMPv3 (Simple Network Management Protocol version 3)
- IGMP Snooping (Internet Group Management Protocol)
- SNTP (Simple Network Time Protocol)
- LLDP (Link Layer Discovery Protocol)

4. Gigabit Switch Blades

Modify the existing Cisco 6509-e v04 chassis at the MRTMC by adding:

- WS-SUP720-3B Catalyst 6500/Cisco 7600 Supervisor 720 Fabric MSFC3 PFC3B 1
- MEM-C6K-CPTFL512M Catalyst 6500 Sup720/Sup32 Compact Flash Mem 512MB

(More details to follow.)

(C) CONSTRUCTION METHODS

1. General

Ensure that all Ethernet switches are UL listed.

Verify that network/field/data patch cords meet all ANSI/EIA/TIA requirements for Category 6 4-pair unshielded twisted pair cabling with stranded conductors and RJ45 connectors.

Ensure that all project IP addresses are assigned as static addresses. Ensure as-built plans include the identification of all IP addresses, subnets, gateways, VLANs, and associated hardware devices and device locations. Configure the Ethernet network so the CCTV cameras are in separate VLAN(s) from other devices. All CCTV VLANs shall have IGMP snooping enabled. Configure the Ethernet network so the DMS signs are in a separate VLAN from other devices.

After consulting with vendors of communication hardware, submit the following for review and approval by the Engineer:

- Drawings and supporting documentation of the physical network topology as established and installed including physical connectivity at the device and port level

- Drawings and supporting documentation for a coherent and complete overall logical layers 2-3 network architecture and detailed design to include the following:
  - VLAN
  - STP domains (if applicable)
  - STP mode / role
  - STP ports
  - IP addressing/subnets/gateways
  - IP routing/trunking
  - Routing and routed protocols
  - Multicast addressing
- Drawings and supporting documentation identifying SNMP and RMON strategy and configurations including, probe information as applicable, management IP addressing, community strings, MIBS, traps, and respective active/passive alert thresholds.

2. Gigabit Ethernet Routing Switches

Install Gigabit Ethernet routing switches that provide data aggregation and data distribution to and from Ethernet edge switches located at each ITS device cabinet. Ensure that the Gigabit Ethernet routing switches communicate with one another at Gigabit Ethernet data transmission rates (1000 Mbps).

Ensure that the network administrator will be able to remotely manage each Gigabit Ethernet routing switch for switch configuration, performance monitoring, and troubleshooting. Locate the Gigabit Ethernet routing switches in the AET Vaults, as shown in the ITS Concept Plans and provide full Layer 3 functionality.

Install and configure the Gigabit Ethernet routing switches to be fully compatible with the Ethernet edge switches as defined in this Scope of Work.

Ensure all fiber connections of the Gigabit Ethernet routing switches are connected to a minimum of two pairs of single-mode fiber strands of the ITS cable plant via fiber-optic interconnect center for redundant communications.

Connect the Gigabit ports with other Gigabit Ethernet routing switches as described in the ITS Concept Plans.

3. Ethernet Edge Switches

Ensure that the ITS network administrator will be able to manage each Ethernet edge switch individually or as a group/cluster for switch configuration, performance monitoring, and troubleshooting. Note that these requirements stipulate additional minimum management intelligence (i.e., Layer 2+) typical of most current industrial Ethernet deployments. Ensure that the Ethernet edge switches include Layer 2+ capability providing architecture standardization, open connectivity (i.e., interoperability), bandwidth management, rate limiting, security filtering, and general integration management of an advanced Ethernet switching architecture.

Ensure that all project IP addresses and VLAN IDs are statically assigned. Ensure as-built plans include the identification of all IP addresses, VLANs, and associated hardware devices and device locations.

Mount the Ethernet edge switches securely inside each ITS device cabinet in the communications rack or on a vertical rail. Ensure that the Ethernet edge switches are resistant to all electromagnetic interference (EMI). Ensure that the Ethernet edge switches are is fully accessible by field technicians without blocking access to other equipment. Verify that fiber-optic jumpers consist of a length of cable that is connectorized on both ends, primarily used for interconnecting termination or patching facilities and/or equipment. Use fiber-optic jumpers that are factory assembled and connectorized and are certified by the fiber-optic jumpers' manufacturer to meet the relevant performance standards required below. Verify that network/field/data jumper cables meet all ANSI/EIA/TIA requirements for Category 6 4-pair unshielded twisted pair cabling with stranded conductors and RJ45 connectors.

4. Gigabit Switch Blades

(Details to follow.)

VIDEO EQUIPMENT

(A) DESCRIPTION

Furnish and install encoders in the field to transmit encoded video to the MRTMC.

(B) MATERIALS

Furnish and install digital video encoder hardware to create a video-over-IP network system. Furnish digital video encoder components that utilize the Moving Picture Experts Group's MPEG-4 Part 10 (also known as H.264) video compression technology as described in this Scope of Work.

1. Digital Video Encoders

Provide Moving Picture Experts Group's MPEG-4 Part 10 digital video encoders in accordance with the International Organization for Standardization (ISO) and International Electrotechnical Commission (IEC) requirements detailed in the ISO/IEC 14496-14 standard for video sharing between the NCTA Executive Offices, other NCTA facilities, and the STOC. Ensure that the digital video encoders are capable of unicast and multicast operation, and that they support the Session Announcement Protocol (SAP) as recommended by the Internet Engineering Task Force (IETF) RFC 2974, and Differentiated Services/Quality of Service (DiffServ/QoS) software components.

Provide the Internet Engineering Task Force (IETF) Session Description Protocol (SDP) in RFC 4566 and Real Time Streaming Protocol (RTSP) in RFC 2326. Ensure that the DVE provides 99.999% error-free operation.

(a) Digital Video Encoder

Provide digital video encoders that are hardware-based network devices able to accept a minimum of one analog National Television System Committee (NTSC) video input and digitize it for transport across IP networks. Use digital video encoders that provides a minimum of two serial data interfaces for transmission of command and control data to other devices (typically camera PTZ commands), as well as console and configuration functions.

(b) Interoperability

Within each type of video compression technology, provide digital video encoders that are interoperable and interchangeable with similar devices and from other manufacturers. Ensure that the digital video encoder is compatible and fully interoperable with software and hardware digital video decoders from the digital video encoder manufacturer, as well as a minimum of two hardware digital video decoders from other manufacturers.

(c) Video Requirements

Ensure that any video input utilizes a BNC connector and delivers one-volt peak-to-peak (Vp-p) NTSC composite video signals for encoding. Ensure that the digital video encoder operates with both color and monochrome video, and that they allow the user to select and adjust video resolution. Ensure that the digital video encoder support resolutions that include, but are not limited to those in table below. Ensure that the MPEG 4 Part 10 digital video encoder are capable of delivering color and monochrome video at 30 fps regardless of resolution, and that they can do so using variable, programmable bit rates from 128 Kbps to 12 Mbps. Ensure that the MPEG 4 digital video encoder are capable of delivering color and monochrome video at 30 fps regardless of resolution, and that they can do so using variable, programmable bit rates from 32 Kbps to 8 Mbps. Ensure that the digital video encoders provides fixed and variable bit rate modes.

Resolution Specifications		
Compression Technology	**Resolution**	**NTSC Requirements**
MPEG 4	QCIF	176 horizontal x 120 vertical
MPEG 4	CIF	352 horizontal x 240 vertical
MPEG 4	2CIF	704 horizontal x 288 vertical

Note: The resolutions attained depend on the data transmission rate.

(d) Electrical Requirements

Ensure that all wiring meets NEC requirements and standards. Provide equipment that operates on a nominal voltage of 120 volts alternating current (V_{AC}). The equipment shall operate within a voltage range of 89 V_{AC} to 135 V_{AC}. The operating frequency range for power shall be 60 Hz. ±3 Hz. If the

device requires operating voltages of less than 120 V_{AC}, supply the appropriate voltage converter.

(e) Serial Interface

Use hardware-based digital video encoders having a minimum of two serial data interfaces and connectors that conform to EIA-232/422/485 standards. Ensure that the serial interfaces support EIA-232 as well as 2-wire and 4-wire EIA-422/485 connections. Ensure that the serial port(s) support data rates up to 115.2 Kbps. Serial interface parameters, such as data format, number of bits, handshaking, and parity, shall be software programmable through local connection to the digital video encoders and through connections over the network. Serial interface ports may utilize registered jack (RJ-45) connectors, D-sub connectors, or screw terminals.

(f) Network Interface

Ensure that the digital video encoders local area network (LAN) connection supports the requirements detailed in the IEEE 802.3 standard for 10/100 Ethernet connections. Provide a digital video encoder having a minimum of one Ethernet port, which shall be a 10/100 Base-TX connection or 100 Base-FX ST interface connection. Ensure that the connector complies with the EIA and Telecommunications Industry Association (TIA) requirements as detailed in the EIA/TIA-568-A standard. Provide copper-based network interface ports that utilize RJ-45 connectors.

Ensure that all Category 6, unshielded twisted pair/shielded twisted pair network cables are compliant with the EIA/TIA-568-A standard. Ensure that the network communication conforms to User Datagram Protocol (UDP), Version 4 of the Internet Protocol (IP) and Version 2 of the Internet Group Multicast Protocol (IGMP).

(g) Front Panel Status Indicators

Provide digital video encoders that have light-emitting diode (LED) displays, liquid crystal displays (LCDs), or similar illuminated displays to indicate status for power, data activity, link status and video transmission.

(h) Configuration and Management

Provide digital video encoders that support local and remote configuration and management. Configuration and management functions shall include access to all user-programmable features, including but not limited to addressing, serial port configuration, video settings, device monitoring, diagnostic utilities, and security functions. Ensure that the digital video encoders support configuration and management via serial login, telnet login, and Simple Network Management Protocol (SNMP).

(i) Environmental Requirements

Ensure that encoders comply with the environmental requirements detailed in the NEMA TS 2 standard. House the digital video encoder in a field cabinet with protection from moisture and airborne contaminants, blowing rain, wind, blowing sand, blowing dust, humidity, roadside pollutants, vandalism, and theft. Ensure that the digital video encoder is resistant to vibration and shock, and conforms to Sections 2.1.9 and 2.1.10, respectively, of the NEMA TS 2 standard.

Provide digital video encoders that meet the following environmental conditions from the NEMA TS 2 standards:

- Ambient temperature: -30 degrees F to 165 degrees F; and
- Humidity: 5% to 95% relative humidity, non-condensing

(C) CONSTRUCTION METHODS

Furnish, install and integrate the digital video encoders in each CCTV cabinet as shown in the ITS Concept Plans. At CCTV sites, connect the analog input of the MPEG 4 the digital video encoder to the CCTV camera as defined above. Connect the RS-422 PTZ serial communications from the camera to the serial port of the video encoder. Connect the Ethernet port of the digital video encoder to the Ethernet edge switch as shown in the ITS Concept Plans.

Configure ports and IP addresses for multicast broadcast and VLANs.

Connect the Ethernet output of the digital video encoder to edge switch. Use standard coax cable with BNC (gold-plated center pin) connectors.

ITS DEVICE INTEGRATION

(A) DESCRIPTION

Modify the software configuration of the *Smartlink* software at the STOC and/or MRTMC to permit viewing and command/control of the proposed ITS devices (and DMS installed by the Gaston Garden Parkway West Design-Build Team) from any Smartlink workstation.

(B) FUNCTIONAL REQUIREMENTS

1. *Smartlink*

Smartlink includes a zoomable static display map that includes a location of each ITS device. This map can be dynamically sized. Each ITS device is associated with an icon that loads an executable application. All ITS elements, icons and their respective locations are stored in the 1983 North American Datum North Carolina state plane coordinates in English units (feet). Text notes are stored for each device, which includes the dates of the last modification.

Edit the existing unified device database to add the new ITS devices with icons. The unified device database contains the coordinates of each device in individual records. Collect the location data for all ITS field devices required to add the new devices to the existing database. Ensure the map extents have adequate coverage to show the new devices.

All additions to the database must be viewable by all users from any *Smartlink* workstation.

CSC CONNECTION

A leased commercial connection (transmission rate to be determined) from the corridor to the CSC for the sharing of the ITS data from the corridor will be provided by others. The CSC network extends to the STOC via NCDOT and NCTA fiber-optic cable. This redundant path will be in addition to the link provided via the MRTMC.

Once the circuits are tested and accepted (by others), verify communications, and test communications between devices on the corridor and the STOC according to the provisions in the Testing Section of this Scope of Work. NCTA will be responsible for all monthly/reoccurring costs associated with this connection.

SUBMITTAL DATA AND DOCUMENTATION

(A) Description

Provide project submittal data and documentation as described below. All submittals described in this section will utilize the NCTA Constructware site.

(B) SUBMITTALS

1. General

Comply with NCTA Design-Build Submittal Guidelines. All written documentation will be either 11" x 17" or 8½" x 11" format. No documentation may be smaller or larger than these formats. Unless otherwise noted all submittals for this project will be in Constructware. Except for standard bound manuals, bind all 8 1/2" x 11" documentation, including 11" x 17" drawings folded to 8½" x 11", in logical groupings in either 3-ring or plastic slide-ring loose-leaf binders. Permanently label each grouping of documentation.

All materials and equipment used on the project shall be submitted for review and approval prior to use on the project. Items on the Department's QPL will be approved by manufacturer and part number reference. Items not on the Department's QPL shall have catalog cut sheets submitted and approved that verify compliance with the *Standard Specifications*, *Standard Roadway Drawings*, ITS Concept Plans and this Scope of Work. All submittals will be reviewed and approved the Authority. Absence of comment will not grant approval.

2. Qualified Products

The Qualified Products List (QPL) is available on the Department's Website. Certain signal and communications equipment, material, and hardware shall be pre-approved on the QPL by the date of installation. Equipment, material, and hardware not pre-approved when required will not be allowed for use on the project. Consult the QPL Website to obtain pre-approval procedures.

3. Submittal Requirements

Provide certification through the Constructware site to NCTA that all Design-Build Team-furnished material is in accordance with the contract. When requested by NCTA, provide additional certifications from independent testing laboratories and sufficient data to verify item meets applicable specifications. Ensure additional certification states that the testing laboratory is independent of the material manufacturer and neither the laboratory nor the manufacturer has a vested interest in the other.

The intent of submittals is to show completely the materials meet the requirements of the ITS Concept Plans and this Scope of Work and how the Design-Build Team intends to construct or configure the materials. The Design-Build Team shall clearly demonstrate in the submittals that the desired materials shall meet or exceed the requirements of the ITS Concept Plans and this Scope of Work. Each submittal shall be sufficiently complete and detailed for the Authority to review and approve the submittal. For submittals with surge protection devices (SPDs), the submittal should include a block diagram that clearly indicates the purpose of each SPD (data, power, comms, etc.) and the placement of the SPD in the path of data/power flow. If NCTA deems the submittal insufficient in detail or completeness for review or approval, the submittal will be returned for corrections. Additional time will not be granted for re-submittal.

Before material submittal data begins, provide to NCTA for approval a list of all submittals with approximate dates of submission that the Design-Build Team intends to make. It is incumbent upon the Design-Build Team to schedule reviews in a timely manner that will not delay their schedule.

Certain groups of materials are related in function and operate as a subsystem together. To ensure individual and subsystem compliance with the project requirements materials shall be submitted as packages as follows:

Submittal Package	Description
CCTV Field Equipment	CCTV camera, encoders, camera lowering device, camera pole
Testing Plans	Detailed test plans, procedures and testing schedule
CCTV Central Video Equipment	Video switch replacement components
Communications Hardware	Ethernet Routing and edge switches, port

Submittal Package	Description
	servers, communications racks
Electrical	UPS, meter bases, disconnects
Dynamic Message Signs	DMS sign, sign controller and sign controller cabling between sign and controller, DMS controller cabinet
Field Equipment Cabinets	Cabinet layout and wiring diagrams
Fiber-optic Cable	Fiber-optic cable, drop cable assemblies, interconnect centers, splice enclosures
Field Infrastructure	Conduit, risers, junction boxes, heavy-duty junction boxes/cabinets, misc. hardware
RWIS	Environmental sensors, remote processing unit, supporting tower
MVDS Detection	Detector unit, vendor software, cabling

Submit cabinet layout and wiring diagrams for all cabinets.

Identify all proprietary parts in furnished material. The Authority reserves the right to reject material that uses proprietary components not commercially available through electronic supply houses.

For furnished material listed on the QPL, furnish submittals in the format defined by the QPL.

For furnished material not on the QPL, furnish the equipment list including catalog cuts. Identify proposed material on catalog cuts by a reproducible means. Ensure material lists contain material description, brand name, manufacturer's address and telephone number, stock number, size, identifying trademark or symbol, and other appropriate ratings. For submittals showing a variety of models and parts available from the manufacturer, clearly identify by circles, marking or other means the specific materials for which approval is requested.

Submittal approval will be granted only to specific materials; do not deviate from what is approved without approval by the NCTA. Do not fabricate or order material until receipt of the Authority's approval. All submittals will be returned as either "Accepted (AC)" (as submitted), "Approved as Noted (AN)" or "Returned for Correction (RC)". The Design-Build Team may proceed with fabrication or ordering for items marked "Approved". If an item is marked "Approved as Noted" without any stipulation for re-submittal, then the Design-Build Team may proceed with fabrication or ordering. For any other notations, the Design-Build Team shall revise the submittal, address comments and resubmit for approval.

4. Documentation

In addition to the requirements in Section 109 of the *Standard Specifications*, furnish to NCTA two copies of the following materials prior to acceptance: warranty materials, and serial and model numbers of all equipment furnished. All equipment and

appurtenances shall be furnished and identified by name, model number, serial number, technical support, and warranty telephone numbers, and any other pertinent information required to facilitate equipment maintenance. Provide all configuration data for each device in electronic and printed form.

5. Dynamic Message Signs

(a) Shop Drawing

Submit to NCTA for approval the brackets for supporting the DMS and the access platform. The Design-Build Team must ensure that the DMS signs are totally compatible with the existing support structures provided by the others. Show in the shop drawings provisions for attaching DMS and access platform to supporting structures, applicable material specifications, and any other information necessary for procuring and replacing any part of the complete DMS.

(b) Test Documents

Furnish the Engineer with the manufacturer's test report for each lot of direct tension indicators used in the project. The manufacturer must perform these tests according to the requirements of ASTM F959. Include in each test report the lot number of the indicators, manufacturer's name, tension load when indicators were tested, gap clearance, nominal size, coating thickness, date tested, and name and location of the company that performed the tests.

Furnish the Engineer with the manufacturer's instructions for installing the direct tension indicators before installation begins along with at least one metal feeler gauge for each 50 direct tension indicators shipped. Use only direct tension indicators whose container lot numbers match the lot numbers on the test documents.

(c) Required Test Samples

Furnish the Engineer with three samples of load indicating washers from each lot number, size, and type for departmental tests along with two of the metal feeler gages required for performing the tests.

(d) Character Set Submittal

Submit through Constructware an engineering drawing of the DMS character set including 26 upper case letters, 10 numerals, an asterisk (*), a dash, a plus sign (+), a designated lane diamond, a slash, an ampersand, and arrows at 0, 45, 90, 135, 180, 225, 270, and 315 degrees.

(e) Drawings and Documents' Certification

Provide the following drawings, documents, plans, and calculations approved by a Professional Engineer registered in the state of North Carolina that bears his/her signature, seal, and date of acceptance:

- Plans for the DMS enclosure, mounting description, and shop drawings
- Plans for overhead sign assembly, footings, design computations and shop drawings
- Electrical power distribution drawings and power consumption calculations

i. Mechanical

This set of submittals includes, but is not limited to, material specifications, catalog cut sheets, parts list, and fabrication drawings for DMS controller cabinet(s), DMS enclosure, character assemblies, DMS overhead assembly, DMS to DMS overhead assembly mounting, etc. Engineering calculations must accompany drawings as needed and applicable.

ii. Electrical

This set of submittals includes, but is not limited to, material specifications, catalog cut sheets, parts list, and wiring diagrams within the DMS controller cabinet, DMS enclosure, DMS controller cabinet/enclosure, service entrance cabinet/panels, and etc. This set of submittals also includes power consumption calculations, wire and conduit size calculations, voltage drop calculation, etc. The DMS electrical system: wires, conduits, breakers, panel-boards, etc. must meet the latest edition of NEC requirements and must be sealed and signed by a Professional Engineer registered in the state of North Carolina.

iii. Electronics

This set of submittals includes, but is not limited to, material specifications, catalog cut sheets, parts list, and schematic diagrams for all electronics assemblies and sub-assemblies used in the system.

iv. Block Diagrams

A block diagram shall be provided for the following:

- DMS System,
- DMS Controller Cabinet,
- DMS Enclosure
- DMS Controller
- DMS Display Boards
- DMS Driver Board(s)
- DMS Lighting Control Board(s),
- Interface Board(s)
- Other system's boards/assemblies that help in understanding, troubleshooting, and repairing the system and/or system's components

v. LEDs

This set of submittals includes LED data/specification sheets and the LED selection procedure.

vi. Software Documentation

Supply software with full documentation, including a CD-ROM containing ASCII versions of the following Management Information Base (MIB) files in Abstract Syntax Notation 1 (ASN.1) format:

The relevant version of each official standard MIB Module referenced by the device functionality.

If the device does not support the full range of any given object within a Standard MIB Module, a manufacturer specific version of the official Standard MIB Module with the supported range indicated in ASN.1 format in the SYNTAX and/or DESCRIPTION fields of the associated OBJECT TYPE macro shall be provided. Name this file identical to the standard MIB Module, except that it will have the extension ".man".

A MIB Module in ASN.1 format containing all manufacturer-specific objects supported by the device with accurate and meaningful DESCRIPTION fields and supported ranges indicated in the SYNTAX field of the OBJECT-TYPE macros.

A MIB containing any other objects supported by the device.

Allow the use of all of this documentation by any party authorized by the Authority for systems integration purposes at any time initially or in the future, regardless of what parties are involved in the systems integration effort.

(f) DMS Bench Test Unit and Bench Repair Documentation

i. DMS Bench Test Unit

Provide a fully operational DMS comprised of three (3) character modules of the size and type specified elsewhere in this Scope of Work. If the Authority owns one such unit from a previous contract, this item will be deleted.

Provide the Test Unit with controller, drivers, power supplies, and all other devices and equipment needed to furnish a fully operational Test Unit.

Provide access to all the electronics and electrical devices and equipment within the Test Unit enclosure from the back. Provide access to character modules from the front of the Test Unit.

Ensure all materials and electrical/electronic devices, components, and equipment used to build the Test Unit conform to the applicable specifications and requirements outlined elsewhere in this Scope of Work and other documents and standards referred to by this Scope of Work.

Furnish the Test Unit with an electrical cord (hot, neutral, and ground) for power connection to a standard receptacle. In addition to this cord, provide an on/off switch mounted in a convenient location on the outside of the Test Unit enclosure.

Install an appropriate ventilation system in the Test Unit.

Submit a drawing outlining the layout of parts and components, location of switches and other devices for review and approval.

ii. Bench Repair Documentation

After approval of any equipment or equipment component parts and prior to installation of the equipment, supply all schematics drawings, board layout information, equipment manuals, software, and firmware required to perform bench repair to the component level and testing of electronic equipment and equipment circuit boards. Provide above documentation to the NCDOT Traffic Electronics Center at the address below. Failure to supply the documentation required by this Section of the Scope of Work shall be grounds for rejection of the submitted item due to incomplete information. Provide schematic drawings as well as the board layout drawings that identify all components in the equipment or circuit board including but not limited to all digital and analog integrated circuits devices (ICs), all discrete electronic components, transformers, relays, and other electronic devices and components used in the circuits. Provide schematic drawings that show pin-to-pin interconnection between components. Provide a complete parts list for each circuit board's components to the Traffic Electronics Center. Provide a copy of all software required to operate any equipment or circuit boards for the purposes of test or system software to test operation of equipment used as a system component.

iii. Field Trial

At the request of the Engineer, supply a three-character demonstration module with characters of the size and type specified for the project, an appropriate control device and power supply to allow character display within 30 working days of the request. Perform a field trial on this module at a time and location selected by the Engineer.

This trial will allow the Engineer or his selected representatives to test the readability of the DMS at the maximum distance required for specified character size. Test the module with the sun directly above the DMS, and near the horizon in front of and behind the DMS (washout and backlit conditions).

TRAINING

(A) DESCRIPTION

Provide training for the installation, operation, and maintenance of:

- CCTV field equipment
- Communications hardware
- MVDS detection
- Fiber-optic communications
- RWIS
- DMS

NCTA will consider waiving certain sections of training if the equipment provided as a part of the project is identical or similar to equipment provided as a part of the Triangle Expressway project.

(B) MATERIALS

1. General

Provide training in the installation, operation, maintenance, troubleshooting, and repair of all equipment and software. Prepare training outline, agenda, training manuals, training exercises, instructor resumes and any other teaching aids for approval by NCTA. For exercises requiring computers, furnish enough computers to have one computer per two students.

Provide draft training material to NCTA for review and approval at least 60 days prior to the scheduled training. Provide adequate time for review and revision of the draft training materials. Furnish audio-visual equipment, demonstration equipment, and "hands-on" equipment in support of the envisioned training. Each training participant shall receive a copy of course materials including both comprehensive and presentation manuals. Assume there will be 12-15 students in the class. Provide two additional copies of these documents to NCTA.

Utilize training personnel well versed in the subject matter and with extensive field experience dealing with real world problems. Utilize training personnel that have been certified by the respective manufacturers.

Video record the entire training on digital video disc (DVD) and provide the DVD(s) to NCTA for later use.

The training shall be conducted locally after the completion of all system integration tests. NCTA shall provide the training facility. Provide NCTA with a 30-day notification to carry out the training so that arrangements can be made for attendance. Coordinate a mutually agreeable date, time, and location with the Authority. The Engineer shall approve the training schedule time and location.

Develop the course content specifically for the products supplied for this project. The course shall include the following topics:

- Introductory-level briefing to familiarize attendees,

- Terminology,
- Theory of operation,
- Installation,
- Hardware and software configuration
- Operating procedures and capabilities
- Testing, diagnostics and troubleshooting
- Software applications
- Use of the system documentation to operate, diagnose, maintain, and expand the system
- "Hands-on" use of the system, laptop computer and software, system test equipment, and any other system equipment supplied

Provide course lengths and specific training described below:

2. CCTV Field Equipment

Provide training for the CCTV field equipment and the local CCTV camera software as described below:

Course	Type of Training	Length (Days)
Operations	Lecture	1
Theory of operation	Lecture, Demonstration	
Local camera programming	Lecture, Demonstration and Hands-on	
Camera addresses, presets, privacy zones, tours, other features		
Maintenance	Lecture	
Routine maintenance, testing, troubleshooting	Lecture, Demonstration and Hands-on	

3. Communications Hardware

Provide training for the Ethernet communications hardware as described below:

Course	Type of Training	Length (Days)
Ethernet Switches		1
Introduction	Lecture	
Configuration and programming	Lecture	
Review of Maintenance Manual	Lecture and Hands-on	
Review of Operations Manual	Lecture and Hands-on	
Maintenance	Lecture, Demonstration and Hands-on	
Routine, troubleshooting procedures, testing, system restart and recovery		
Question and answer session		

4. Fiber-Optic Communications

Provide training using the test and repair equipment furnished for the project. Provide training for the fiber-optic system for the following categories and for the minimum number of hours shown:

Course	Type of Training	Length (Days)
Fiber-Optic Cable System		1
Safety	Lecture	
Introduction to fiber-optics, theory, and principals	Lecture	
Fiber and cable types	Lecture and Hands-on	
National Electrical Code considerations	Lecture and Hands-on	
Plenum and riser type cable		
Outdoor cable, etc.		
Introduction to terminating hardware, end equipment, and applications	Lecture, Demonstration and Hands-on	
Connectors (ST, SC, etc.)		
Splice enclosure, splice trays, and connector panels		
Cable placement techniques		
Question and answer session		
Fiber-Optic Cable System (cont.)		1
Cable handling and preparation (sheath removal, grip installation, etc.)	Lecture, Demonstration and Hands-on	
Splicing and terminating methods	Lecture, Demonstration and Hands-on	
Mechanical splicing using various techniques		
Fusion splicing		
Field termination of connector types		
Introduction to cable plant testing procedures	Lecture, Demonstration and Hands-on	
Proper usage of optical light generator and power meter		
Class project (build working system using cables/connectors made by attendees)	Lecture, Demonstration and Hands-on	
Question and answer session.		
Fiber-Optic Cable System (cont.)		.5
Class project -- Testing and troubleshooting	Lecture, Demonstration and Hands-on	
Cable system maintenance and restoration	Lecture	
Question and answer session.		

5. RWIS

Provide training in the basic theory and operation of the RWIS system. Include in this training lecture and hands-on exercise in the use of the RWIS software.

The training shall include the following sessions specific to the RWIS system:

Course	Type of Training	Length (Days)
Operations	Lecture	1
System overview/theory of operation	Lecture, Demonstration	
System software	Lecture, Demonstration	
Maintenance	Lecture	1
Routine maintenance, troubleshooting, testing and calibrating	Lecture, Demonstration and Hands-on	

6. MVDS

Provide two sessions in the basic theory and operation of the MVDS detectors, cabinets, and other related equipment. Include in this training lecture and hands-on exercise in the use of the MVDS software.

The training shall include the following sessions specific to the MVDS detectors:

Course	Type of Training	Length (Days)
Operations	Lecture	1
System overview/theory of operation	Lecture, Demonstration	
System software	Lecture, Demonstration	
Maintenance	Lecture	1
Routine maintenance, troubleshooting, testing and calibrating	Lecture, Demonstration and Hands-on	

7. DMS Signs

Provide one session in the basic theory and operation of the DMS equipment, cabinets, and other related equipment. Include in this training lecture and hands-on exercise in the use of the sign controller software. The training shall include the following sessions specific to the DMS signs:

Course	Type of Training	Length (Days)
Operations	Lecture	1
System overview	Lecture, Demonstration	
System software	Lecture, Demonstration	
Maintenance	Lecture	1
Routine maintenance, UPS, troubleshooting, testing	Lecture, Demonstration and Hands-on	

TESTING AND ACCEPTANCE

(A) GENERAL

Identify the test organization including the roles and responsibilities of the quality assurance organization. For each piece of equipment that requires testing, a test plan must delineate the following:

- Test procedures with test values and desired outcomes,
- Submittal schedule of test procedures,
- Start time of each level of testing,
- Test duration including any re-tests that are required or anticipated, and
- Submittal of the completed and signed off test report.
- Revisions to the test plan must be provided to NCTA at the Monthly Progress Meeting.

All testing must be performed by the Design-Build Team and will be observed by the Engineer. The Engineer may perform additional testing at any time during the project.

Conduct and complete successfully the following progressive series of tests before acceptance: factory acceptance testing, field demonstration test prior to installation, installed standalone device tests, system test of the network hardware, management software and an observation period. Develop a comprehensive series of test plans for each device to determine the equipment was correctly installed and meets the requirements of materials, workmanship, performance, and functionality required in the Plans and this Scope of Work. The test plans shall describe the functions to be tested, purpose of test, setup requirements, procedures to be followed, any inputs and expected outputs for each test, criteria for pass/fail and any required tools or test equipment. Any software testers shall be pre-approved by NCTA.

Develop as part of the test plan a traceability matrix of all the individual subsystem functional requirements to be used to cross-reference each planned test to a specific contract requirement to be verified. This Test Evaluation/Traceability Matrix shall be used by the Engineer to crosscheck the functional requirements and the results.

A key element of test plans, where appropriate, is the introduction of forced errors into the functional test. The test plan shall check the actual result of the forced error against the anticipated result. Test will be performed by the Design-Build Team and witnessed by NCTA. No deviation from the approved test procedure shall be permitted without approval from the Engineer. Any changes to the approved test procedure to accommodate unforeseen events during the time of testing shall be documented in the master test procedure. Immediately following the conclusion of each test, NCTA and the Design-Build Team shall meet to agree on the results observed and recorded during the testing. This will form the basis for the conclusions reported in the test plan. All test results, notes, and observations shall be maintained in electronic form. Maintain complete records of all test results during all stages of testing.

(B) FACTORY ACCEPTANCE TESTING (FAT)

Conduct a factory acceptance test in the presence of the Engineer to verify to NCTA that all design, materials, and performance requirements for this project are satisfactorily met. Perform the factory acceptance tests at the equipment manufacturer's facility or at an independent testing laboratory.

1. Ethernet Switches and Video Encoders

Subject the video encoders, Gigabit Ethernet core and routing, Ethernet edge switches, switch blades, GBICs, and switch supporting equipment to factory acceptance tests (FATs). Develop and submit a test plan for FATs to the Engineer for consideration and approval. The Engineer may accept certification by an independent testing laboratory in lieu of the FATs to satisfy the requirement that certain features and functions have been witnessed and documented as performing satisfactorily. Arrange for and conduct the tests and be responsible for satisfying all inspection requirements prior to submission for the Engineer's inspection and acceptance. The Engineer reserves the right to witness all FATs. Complete the tests within five calendar days.

Transient, Temperature, Voltage, and Humidity Testing: Test and evaluate the units as indicated below. Ensure all testing of the Gigabit Ethernet core and routing switches, Ethernet edge switches, switch blades, GBICs and switch supporting equipment adheres to procedures defined in Section 2.2.7 of the NEMA TS 2-1998 standard and include the following tests:

- Test A: (FAT) Placement in Environmental Chamber and Check - Out of Hook-Up,
- Test B: (FAT) Temperature Cycling and Applied Transient Tests (Power Service),
- Test C: (FAT) Low - Temperature Low - Voltage Tests,
- Test D: (FAT) Low - Temperature High - Voltage Tests,
- Test E: (FAT) High - Temperature High - Voltage Tests,
- Test F: (FAT) High - Temperature Low - Voltage Tests,
- Test G: Test Termination (All Tests), and
- Test H: Appraisal of Equipment under Test.

2. RWIS

Subject the RWIS to factory acceptance tests. Utilize a testing procedure that includes a remote field sensor and RPU test and a remote-to-central communication test. Conduct the following tests and submit the results to the Engineer:

- Calibrate instrument alignment with true north,
- Perform and document laboratory tests verifying proper sensor calibration
- Furnish sensor calibration protocols and adjustment procedures,
- Verify that the grounding component is installed as required and produces a voltage standing wave ratio (VSWR) of 1.5 or less, and
- Certify anemometers by wind tunnel tests.

Submit test results to the Engineer for review and approval. Upon request, furnish independent laboratory testing documentation certifying adherence to the stated wind

force criteria using a minimum effective projected area (EPA), the actual EPA, or an EPA greater than that of the device to be attached.

3. Dynamic Message Sign

The factory acceptance tests consists of all tests described in Section 2.2 "DMS Equipment Tests" of NEMA TS 4-2005 (Hardware Standards for Dynamic Message Signs with NTCIP Requirements). Perform all tests and submit certified results for review and approval.

Manufacture a prototype DMS and controller of the type and size described in the Scope of Work. Test the prototype according to the factory acceptance and operational test requirements. When all corrections and changes (if any) have been made, the Authority may accept the prototype DMS and controller as the physical and functional standard for the system furnished under this contract. You may use the prototype units on this project if, after inspection and rework (if necessary), they meet all physical and functional specifications. In the case of standard product line equipment, if the Design-Build Team can provide test results certified by an independent testing facility as evidence of prior completion of successful design approval tests, then the Engineer may choose to waive these tests.

In each factory acceptance test, successfully perform the Functional Tests described below. Apply the extreme conditions to all associated equipment unless stated otherwise in this Scope of Work.

Test the DMS system in a series of design approval and functional tests. The results of each test must meet the specified requirements. These tests should not damage the equipment. The Engineer will reject equipment that fails to fulfill the requirements of any test. Resubmit rejected equipment after correcting non-conformities and re-testing; completely document all diagnoses and corrective actions. Modify all equipment furnished under this contract, without additional cost to NCTA, to incorporate all design changes necessary to pass the required tests.

Provide four copies of all test procedures and requirements to the Engineer for review and approval at least 30 days prior to the testing start date.

Only use the approved procedures for the tests. Include the following in the test procedures:

- A step-by-step outline of the test sequence, showing a test of every function of the equipment or system tested
- A description of the expected nominal operation, output, and test results, and the pass / fail criteria
- An estimate of the test duration and a proposed test schedule
- A data form to record all data and quantitative results obtained during the test
- A description of any special equipment, setup, manpower, or conditions required by the test

Provide all necessary test equipment and technical support. Use test equipment calibrated to National Institute of Standards and Technology (NIST) standards. Provide calibration documentation upon request.

Conform to these testing requirements and the requirements of these specifications. The Engineer will reject all equipment not tested according to these requirements. It is the Design-Build Team's responsibility to ensure the DMS system functions properly even after the Engineer accepts the DMS test results.

Provide four copies of the quantitative test results and data forms containing all data taken, highlighting any non-conforming results and remedies taken, to the Engineer for approval. An authorized representative of the manufacturer must sign the test results and data forms.

(C) PRE-INSTALLATION FIELD DEMONSTRATION TESTING (FDT)

1. General

Conduct pre-installation tests on all devices at a Design-Build Team-provided facility within Mecklenburg or Gaston Counties. Perform the tests on all components supplied to verify that no damage was done to any unit during the shipment and delivery process. Notify the Engineer a minimum of 15 calendar days before the start of any tests. Conduct all tests according to the approved test procedures detailed in this section. Each device shall pass the individual tests detailed below prior to installation.

(a) Product Examination Test

Examine each device carefully to verify that the materials, design, construction, markings, and workmanship comply with all applicable standards, specifications, and requirements. Perform the following tests as a minimum:

- Verify that all surfaces are free of dents, scratches, weld burns, or abrasions. Round sharp edges and corners
- Verify bend radius of cables is not excessive or could potentially cause damage
- Verify all modules, lamps, and components are properly secured
- Verify that there are no exposed live terminals

(b) Continuity Test Specifications

Check the wiring to determine conformance with the applicable standards, specifications, and requirements.

(c) Operational Test Specifications

Operate each device long enough to permit equipment temperature stabilization, and to check and record an adequate number of performance characteristics to ensure compliance with applicable standards, specifications, and requirements.

(d) Preinstallation Test Failure Consequence

If any unit fails to pass a FDT, the unit shall be corrected or another unit substituted in its place, and the test successfully repeated.

If a unit has been modified because of an FDT failure, prepare a report and deliver that report to the Engineer prior to the unit's shipment. The report shall describe the nature of the failure and the corrective action taken.

If a failure pattern develops (more than two failures), the Engineer will make a determination of the disposition of the failed equipment without additional cost to NCTA or an extension of the contract period.

2. Ethernet Switches and Video Encoders

Subject the video encoders, Gigabit Ethernet core and routing, and Ethernet edge switches, switch blades, GBICs, and switch supporting equipment to field demonstration tests (DATs). Develop and submit a test plan for FDTs to the Engineer for consideration and approval. Arrange for, conduct the tests, and be responsible for satisfying all inspection requirements prior to submission for the Engineer's inspection and acceptance. The Engineer reserves the right to witness all FDTs. Complete the tests within five calendar days.

3. Dynamic Message Signs

Subject the DMS to design approval and factory acceptance tests as described in the section Dynamic Message Signs in this Scope of Work.

Test the NTCIP requirements outlined above by a third party testing firm. Submit to the Engineer for approval a portfolio of the selected firm. Include the name, address, and a history of the selected firm in performing NTCIP testing along with references. Also, provide a contact person's name and phone number. Submit detailed NTCIP testing plans and procedures including a list of hardware and software to the Engineer for review and approval 10 days in advance of a scheduled testing date. Develop test documents based on the NTCIP requirements of this Scope of Work. The field demonstration test will use the NTCIP Exerciser, and/or other authorized testing tools and will follow the guidelines established in the ENTERPRISE Test Procedures. Conduct the test in North Carolina on the installed system in the presence of the Engineer. Document and certify the results of the test by the firm conducting the test and submit to the Engineer for review and approval. In case of failures, remedy the problem and have the Firm retest in North Carolina. Continue process until all failures are resolved. NCTA reserves the right to enhance these tests as deemed appropriate to ensure device compliance.

The Test Unit shall be pre-configured to the system requirement. The Design-Build Team shall submit a list of the additional components for approval by the Engineer.

The Test Unit, all associated manuals, equipment, and repair documentation listed above shall be delivered to:

- North Carolina Department of Transportation
- Traffic Electronics Center
- 750 North Greenfield Parkway
- Garner, NC 27529
- ATTN: John A. Stephenson
- Phone #: (919) 661-4697

4. Microwave Vehicle Detectors

Subject the MVDS to field demonstration tests as follows:

- Use a laptop computer provided as part of the support equipment to configure the installation
- Install the MVDS sensor at the site for test setup
- Verify that configuration data is stored in nonvolatile memory
- Download previously stored configuration data
- Verify that vehicles traveling at the test site can be detected across multiple travel lanes to the accuracy specified herein
- Drive a test car of known length and speed through the detection zone. Compare the output from the vehicle detector to this known value to verify the accuracy of detection. Repeat this measurement at least 10 times
- Verify the volume counts and speed measurements for each MVDS using the test software running on the laptop computer connected locally to the detector's EIA-232/485 communication port. Verify the accuracy of traffic parameters specified herein by using permanent or temporary traffic detection devices of known accuracy

(D) INSTALLED SITE TESTS

1. General

Conduct an approved, installed standalone device installation test at the field site. Test all standalone functions of the field devices using equipment installed as detailed in the Plans, or as directed by the Engineer.

Complete approved test plan forms and turn them over to the Engineer for review as a basis for rejection or acceptance. Provide a minimum notice of 30 calendar days prior to all tests to permit the Engineer or his representative to observe each test.

If any unit fails to pass its stand-alone test, correct the unit or substitute another unit in its place, then repeat the test.

If a unit has been modified because of a standalone test failure, prepare a report describing the nature of the failure and the corrective action taken and deliver it to the Engineer prior to re-testing the unit. If a failure pattern develops, the Engineer may

direct that design and construction modifications be made to all units without additional cost to NCTA or an extension of the contract period.

Utilize vendor supplied device software to perform diagnostic tests of each device. The vendor supplied diagnostic software shall be provided to NCTA before final acceptance. Test the following features of each competent as described below.

2. Conduit

Prepare and submit written test procedures for conduit system tests to be performed. Provide test procedures for review and approval by the Engineer before any tests are conducted. The test procedures shall follow industry standards. The testing shall demonstrate the following:

- All conduit runs are open,
- Run a mandrel through each conduit to demonstrate a fully functional and clear conduit
- Junction boxes and splice boxes are installed correctly with working lids and are free of debris

The conduit system must be tested in accordance with the testing plan and procedures developed by the Design-Build Team and approved by the Engineer. Notify the Engineer of the proposed date, time and location of all testing 10 calendar days in advance of the test being performed. All testing must be performed by the Design-Build Team and shall be observed by the Engineer. The Engineer or assignee may perform additional testing at any time during the project.

3. Fiber-Optic Cable

Conduct optical time domain reflectometer (OTDR) tests on the cable on the reel and after the cable is installed and terminated. Provide written notification a minimum of ten days before beginning fiber-optic cable testing.

After splicing is completed, perform bi-directional OTDR tests on each fiber, including unused fibers, to ensure the following:

- Fusion splice loss does not exceed 0.05 dB,
- Terminations and connections have a loss of 0.5 dB or less, and
- Reflection loss is 40 dB or greater for each connector.

Install a 1000-foot pre-tested launch cable between the OTDR and fiber-optic cable to be tested. Test the fiber-optic trunk and drop cables at 1310 and 1550 nm. Also, test bidirectionally.

If exceeded, remake splices until the loss falls below 0.05 dB. NCTA will record each attempt for purposes of acceptance.

Clearly label each OTDR trace identifying a starting and ending point for all fibers being tested. Record the attenuation level of each fiber and clearly indicate OTDR

trace results in report format. Provide a summary section or spreadsheet detailing the loss budget calculation for each section and a summary or spreadsheet for the actual loss measured for each fiber compared with the allowable loss for the segment. Furnish electronic copies of all OTDR trace results on a CD or DVD. Furnish the manufacturer's make, model number, and software version of the OTDR used for testing.

Provide engineering calculations and tests for fiber-optic cable that demonstrate the loss budget where the fiber originates and where the fiber meets an electronic device. The calculations shall summarize the optical losses versus the allowable losses for the communications equipment between each pair of communications hardware. Provide a tabular summary section or spreadsheet detailing the loss budget calculation for each section. Provide a tabular summary section or spreadsheet for the actual loss measured for each fiber compared with the allowable loss for the segment.

If any fiber exceeds the maximum allowable attenuation or if the fiber-optic properties of the cable have been impaired, take approved corrective action including replacement of complete segments of fiber-optic cable if required. Corrective action will be at no additional cost to NCTA.

4. CCTV Field Equipment

Develop an operational test plan that demonstrates all requirements of the equipment and software. Submit for approval before conducting tests.

Notify NCTA at least 14 calendar days prior to the proposed date for the tests. NCTA shall have the right to witness such tests, or to designate an individual or entity to witness such tests.

Perform the following installed site tests at the camera assembly field site in accordance with the test plans. A laptop computer shall provide camera control and positioning. After completing the installation of the camera assembly, including the camera hardware, power supply, and connecting cables:

- Furnish all equipment, appliances, and labor necessary to test the installed cable and to perform the following tests before any connections are made,
- Verify that physical construction has been completed
- Inspect the quality and tightness of ground and surge protector connections
- Check the power supply voltages and outputs
- Connect devices to the power sources
- Verify installation of specified cables and connections between the camera, PTZ, camera control receiver, and control cabinet
- Perform the CCTV assembly manufacturer's initial power-on test in accordance with the manufacturer's recommendation
- Set the camera control address
- Verify the presence and quality of the video image with a portable NTSC-approved monitor

- Exercise the pan, tilt, zoom, focus, iris opening, and manual iris control selections, and the operation, preset positioning, and power on/off functions
- Demonstrate the pan and tilt speeds and extent of movement to meet all applicable standards, specifications, and requirements
- Verify proper voltage of all power supplies
- Interconnect the communication interface device with the communication network's assigned fiber-optic trunk cable and verify that there is a transmission LED illuminated.

Repair or replace defective or failed equipment and retest.

5. Dynamic Message Signs

An authorized representative of the manufacturer must sign the test results and data forms. Conduct an installed site test of each DMS system installed on the project to exercise the normal operational functions of the installed operational field equipment. The installed site test will consist of the following tests as a minimum:

(a) Physical Examination

Test per section "Physical Examination" of the DMS section of this Scope of Work

(b) Continuity Tests

Test per section "Continuity Tests" above of the DMS section of this Scope of Work.

(c) Functional Tests

Perform the following functional tests:

- Start-up and operation of the DMS locally using a laptop computer,
- Use automatic (photo-electric sensor controlled), DMS control software to switch between "dim", "normal", and "bright" light levels
- Operation of the DMS with all display elements flashing continuously for 10 minutes at the maximum flash rate
- Exercise the DMS by displaying static messages, flashing messages, and alternating static and flashing message sequences
- Automatic polling of the DMS by the control software at various intervals and verification of data received by control software from DMS
- Downloading and editing messages using control software
- Execute status request on the DMS controller
- Normal operations during uploading and downloading
- Selection of messages from the sign controller's local user interface
- Test sequence activation at chosen intervals
- Display and verification of all stored messages
- Resumption of standard operation upon interruption of electrical power

- Demonstration of the failure detection and response functions
- Demonstrate proper operation of the Failure Log
- Set controller clock using the control software
- Execute system shutdown using first the control software and local user interface
- Detection of power failure in the DMS enclosure and reporting of such failure to the control software

6. MVDS Detectors

Inspect the MVDS field components to ensure proper installation and cable termination.

Adjust and verify the detector settings by comparing each sensor's recorded traffic volumes and speed with those actually observed. Remotely repeat this test from the TMC. Verify the accuracy of traffic parameters using permanent or temporary traffic detection methods or devices of known accuracy.

Conduct the installed field tests detailed below. The Design-Build Team shall:

Furnish all equipment, appliances, and labor necessary to test the installed MVDS and the network communication device, and to perform the following tests before any connections are made:

- Perform a continuity test on the detector cables to ensure that anomalies, such as openings, shorts, crimps or defects, are not present,
- Perform continuity tests on the detector's stranded conductors using a meter having a minimum input resistance of 20,000 Ω per volt and show that each conductor has a resistance of not more than that specified by the wire/cable manufacturer,
- Measure the insulation resistance between isolated conductors and between each conductor, ground, and shield using a meter designed for measuring insulation resistance. The resistance must be greater than 100 MΩ. Perform all resistance testing after final termination and cable installation, but prior to the connection of any electronic or field devices, and
- Replace any cable that fails to meet these parameters, or if any testing reveals defects in the cable, and retest new cable as specified in this section.

Furnish and calibrate all test equipment. Demonstrate the following after installation of the MVDS, other hardware, power supplies, and connecting cables:

- Verify that physical construction has been completed as specified in the Plans,
- Inspect the quality and tightness of ground and surge protector connections,
- Check power supply voltages and outputs,
- Verify that device connections to power sources are as specified in the Plans,
- Verify that the installation of specified cables and connections between all detectors and the field cabinet are as specified in the Plans,
- Demonstrate that the remote system is fully operational and performing all specified types of detection, including data storage functions, with a laptop computer, and

- Verify detector accuracy by conducting sample ground counts using test intervals of 10 minutes and 100 vehicles as described in the field demonstration test.

7. RWIS System

Perform installed site tests at the RWIS field site according to the test plans detailed in this section. After the environmental sensors and RPU, and other RWIS hardware, power supplies, and connecting cables have been installed, perform the following:

- Verify that physical construction has been completed as specified in the Plans,
- Inspect the quality and tightness of ground and surge protector connections,
- Check power supply voltages and outputs,
- Connect devices to the power sources,
- Verify installation of specified cables and connections between the environmental sensors and RPUs, and the control cabinet,
- Verify proper orientation of wiring and cabling,
- Ensure that the conduit is straight, neat, and properly secured,
- Verify that the grounding component is installed as required and produces a voltage standing wave ratio (VSWR) of 1.5 or less,
- Test local operation of all environmental sensors and RPU components,
- Calibrate instrument alignment with true north,
- Furnish sensor calibration protocols and adjustment procedures,
- Verify and ensure that sensors are reporting proper field data, and
- Detail regular site maintenance procedures and calibration training.

Provide block diagrams, schematics, catalogs, and line drawings. Program source codes in both printed and digital form.

8. Ethernet Communications System

Once the routing and edge switches have been installed, conduct installed site tests at the Ethernet routing and edge switch field sites according to the submitted test plan. Perform the following:

- Verify that physical construction has been completed as detailed in the Plans
- Inspect the quality and tightness of ground and surge protector connections
- Verify proper voltages for all power supplies and related power circuits
- Connect devices to the power sources
- Verify all connections, including correct installation of communication and power cables
- Verify configuration of the Gigabit Ethernet routing switches Internet Protocol (IP) addresses and subnetwork mask
- Verify the network connection to the Gigabit Ethernet core switch at the STOC through ping and telnet sessions from a remote personal computer (PC)
- Perform testing on multicast routing functionality

Repair or replace defective or failed equipment and retest.

9. Video Encoders

The following items, not otherwise required to be tested elsewhere, shall be tested**:** cable continuity, grounding, and power-up self test. Perform the following:

- Verify configuration of each encoder Internet Protocol (IP) addresses and subnetwork mask,
- Program encoders for different framing rates and resolutions to verify full functionality,
- View the camera image at cabinet through the Ethernet port of encoder on a laptop, and
- Perform testing on multicast routing functionality.

10. CCTV Central Equipment

Test the components of the CCTV central equipment as follows:

- Check all ground, power, data, Ethernet and analog video connections,
- Run power up self test on each piece of equipment,
- Test the connections between each pair of devices, and
- Run all available vendor-supplied self-diagnostics.

(E) SYSTEM TESTING:

1. General

Conduct tests as described below of the DMS, MVDS, CCTV, RWIS, and communications, subsystems. Conduct approved device subsystem tests on the field equipment with the TMC equipment including, at a minimum, all remote communications hardware monitoring and control functions. These tests shall be a demonstration of overall system stability. During this test period, limit downtime due to mechanical, electrical, or other malfunctions to a maximum of eight hours. The Engineer has the right to suspend the test to correct deficiencies and restart the test or to extend the test period by time equal to the downtime in excess of eight hours.

Conduct device and subsystem tests of any repaired or replaced equipment.

Display the event log from the DMS, MVDS, CCTV, RWIS, network management software for a minimum of seven days. Complete approved data forms and turn them over to the Engineer for review, and as a basis for rejection or acceptance.

The Engineer has the right to suspend the test to correct deficiencies and restart the test or to extend the test period by time equal to the downtime in excess of eight hours. If a component has been modified because of a test failure, prepare a report and deliver it to the Engineer prior to retesting.

2. Video Encoders/Decoders

Perform the following:

- Verify the network connection to each encoder and decoder through ping and telnet sessions from MRTMC and STOC workstations,
- View the camera image from workstations in the MRTMC and the STOC, and
- Perform testing on multicast routing functionality.

3. Communications Hardware

For the communications hardware, test the following items**:**

- Verify the network connection to each encoder and decoder through ping and telnet sessions from workstations in the MRTMC and the STOC,
- Ability for remote configuration of devices,
- Failover switching (Rapid Spanning Tree),
- Verify VLAN configuration of CCTV and other ITS devices' data transmissions,
- IGMP protocol and optical connections and configuration of network management software including SNMP and RMON functions.

Simulate the loss of communications and conduct failover tests to determine the communications system's ability to reroute communications and then reconnect upon the loss of primary communications path. Conduct the test on each Gigabit Ethernet routing switch to Gigabit Ethernet routing switch circuit and for each local circuit on each Gigabit Ethernet routing switch.

4. CCTV Subsystem

After completing the integration of the CCTV equipment, conduct a minimum of a seven-day test of the CCTV subsystem hardware and software. This will include that portion of the communications network serving the CCTV subsystem. The Engineer has the right to suspend the test to correct deficiencies and restart the test or to extend the test period by time equal to the downtime in excess of eight hours. If during that time it is determined by the Authority there are hardware or software failures that are the responsibility of the Design-Build Team, the Design-Build Team shall make repairs or replacements to the satisfaction of the Authority.

Test the following features of each component as described below.

(a) CCTV Field Equipment:

The following items, not otherwise required to be tested elsewhere, shall be tested for each CCTV site <u>from the MRTMC and the STOC</u>**:**

- Verify new CCTV device database allows connection to each CCTV in the new database
- NTCIP objects
- Power-up self-tests
- Iris control,
- Preset functions
- Presence and quality of the video image with a portable NTSC-approved monitor

- Preset positioning, and power on/off functions
- Camera and controller access and security from MRTMC and STOC workstations
- Disconnect camera and take local control and reconnect camera at local cabinet to the communications and verify TMC control is regained
- Confirm ability to change camera ID
- Verify unique camera identifier and icons on GUI
- Viewing of camera image on each monitor

In addition, test the system's ability to transport multiple video streams at 30 frames per second at a data rate of 6 Mbs with a latency of less than 250 ms without errors by simultaneously displaying the maximum number of video images on the monitors and MRTMC and STOC workstations.

(b) CCTV Central Equipment/Software

Test as follows:

- Use the GUI interface to select and view each camera,
- Verify the ability to command and control each camera,
- Set presets and command each camera to go to different presets and then return to previous presets, and
- Use each joystick, keyboard, touch screen control pad and keypad, and test the ability to control the pan-tilt-zoom and iris settings of each camera.

5. DMS Signs

After the integration of the DMS subsystem, conduct a minimum of a seven-day test of the DMS subsystem hardware. The Engineer has the right to suspend the test to correct deficiencies and restart the test or to extend the test period by time equal to the downtime in excess of eight hours. If during that time it is determined by NCTA there are failures that are the responsibility of the Design-Build Team, the Design-Build Team shall make repairs or replacements to the satisfaction of NCTA.

- Verify new DMS device database allows connection to each DMS signs in the new database,
- Verify communications port addressing from the DMS,
- Test the NTCIP protocols and commands from the TMC,
- Verify the ability to upload and download configuration data. and
- Verify the ability to download and post sign messages.

6. MVDS Detectors

After the integration of the MVDS subsystem, conduct a minimum of a seven-day test of the MVDS subsystem hardware and software. During the seven-day test, the Design-Build Team shall accomplish the following:

- Verify new MVDS device database allows connection to each MVDS in the new database,

- Verify communications port addressing from the MVDS,
- Verify the ability to upload and download configuration data, and
- Verify the ability to upload traffic data.

The Engineer has the right to suspend the test to correct deficiencies and restart the test or to extend the test period by time equal to the downtime in excess of eight hours. If during that time it is determined by NCTA there are failures that are the responsibility of the Design-Build Team, the Design-Build Team shall make repairs or replacements to the satisfaction of NCTA.

7. RWIS

After the integration of the RWIS subsystem, conduct a minimum of a seven-day test of the RWIS subsystem hardware and software. During the seven-day test, the Design-Build Team shall accomplish the following:

- Verify communications port addressing from the RWIS,
- Verify the ability to upload and download configuration data, and
- Verify the ability to upload weather data.

The Engineer has the right to suspend the test to correct deficiencies and restart the test or to extend the test period by time equal to the downtime in excess of eight hours. If during that time it is determined by NCTA there are failures that are the responsibility of the Design-Build Team, the Design-Build Team shall make repairs or replacements to the satisfaction of NCTA.

(F) OBSERVATION PERIOD

1. General

NCTA shall observe all equipment and software operation according to the requirements of this Scope of Work for a single 60-day system observation period for all subsystems simultaneously. The observation period shall not begin until all subsystems are ready.

The observation period shall begin at final acceptance. A successful 60-day observation period shall consist of continuous operation with no more than a total of two calendar days of non-operation due to mechanical, electrical, or other malfunctions of the CCTV DMS, MVDS, RWIS or communications subsystems.

During the observation period, respond to failures of the Design-Build Team's equipment within two hours and make repairs within eight hours. For items that pose a traffic safety hazard, complete repairs within four hours. If any failures affect major components for more than 48 hours, NCTA shall suspend the observation period beginning when the failure occurred. Resume the observation period with the approval of the Engineer after successful repair or replacement. If three or more major component failures of a like nature occur, NCTA shall terminate the observation

period. Begin a new 60-day observation period with the approval of the Engineer after the faulty equipment has been repaired or replaced.

2. CCTV Subsystem

During this period, NCTA shall observe equipment and software operation according to the requirements of this Scope of Work.

Major subsystem components include the video matrix switch and its peripherals, CCTV cameras, CCTV monitors, fiber-optic video/data transceivers, fiber-optic cable, and CCTV cabinets.

3. DMS Subsystem

During this period, NCTA shall observe equipment and software operation according to the requirements of this Scope of Work.

Major subsystem components include the DMS field controller, DMS display module, DMS Smartlink interface, Ethernet edge switches, fiber-optic cable, and cabinets.

4. MVDS Subsystem

During this period, NCTA shall observe equipment and software operation according to the requirements of this Scope of Work.

Major subsystem components include the Ethernet edge switches, fiber-optic cable, and cabinets.

5. RWIS Subsystem

During this period, NCTA shall observe equipment and software operation according to the requirements of this Scope of Work.

Major subsystem components include the Ethernet edge switches, fiber-optic cable, and cabinets.

LIGHTING SCOPE OF WORK (11-07-11)

General

Obtain the services of a firm prequalified for lighting design by the NCDOT. Furnish, install, connect and place into satisfactory operating condition, lighting equipment and materials in accordance with the 2012 *Standard Specifications for Roads and Structures* and the 2012 *NCDOT Roadway Standard Drawings*, unless otherwise detailed herein. Submit electronic CADD files in MicroStation format, using Geopak Software (current version used by NCDOT), and showing proposed design after review and acceptance of RFC Roadway Plans. There is no aviation, navigation, sign, or tunnel lighting included on this project.

Roadway Lighting

Provide high efficiency lighting at interchanges below, LED lighting is preferable. In addition all luminaries shall be full cut off to reduce light pollution. Coordination with the adjacent airports shall be required in the design and construction of the lighting systems.

Complete interchange lighting is required for the interchange of the Garden Parkway and I-485 near the Charlotte-Douglas International Airport.

Lighting for future lanes and continuous freeway lighting is not required. The Design-Build Team, in like kind, shall replace existing lighting impacted by construction but not replaced by the lighting required above.

Lighting Design

The Design-Build Team shall design the lighting in accordance with the current AASHTO *Roadway Lighting Design Guide*.

Design and install a new lighting system that will provide 0.7 foot-candles (fc) average maintained luminance, with a uniformity ration of 3.5:1 (Average fc : Minimum fc). Provide lighting plans on separate “For Lighting Construction Only” plan sheets. Use materials and construction methods as required by the 2012 *Standard Specifications for Roads and Structures* and the 2012 *NCDOT Roadway Standard Drawings*. Use breakaway couplings or bases meeting current AASHTO requirements. Design circuitry for a maximum of 3% voltage drop per feeder circuit. Provide voltage drop calculations for each circuit. Provide Project Special Provisions and installation details for non-standard equipment or construction methods that are required.

Submit catalog cuts for proposed material. Submit preliminary lighting layout and supporting photometric calculations along with other interim plan review documents. Photometric calculations consist of photometric statistics summary, photometric lighting layout plans, and computer generated spacing charts, or foot-candle and uniformity graphs, that demonstrate how the proposed lighting system will illuminate the proposed roadway to the required standard. Templates may be used to design lighting provided by high mast light standards.

Final Inspection

Contact Lighting / Electrical Engineers from NCDOT or their representatives to inspect the completed lighting system and perform insulation resistance testing for all conductors prior to contract acceptance.

ALL-ELECTRONIC TOLLING (AET) TOLL ZONE SCOPE OF WORK (11-07-11)

General

This AET Toll Zone Scope of Work includes design, engineering, fabrication, delivery and erection of gantries, AET Toll Zone vaults, pavement, concrete pads, sidewalks, electrical work, heat, ventilation, air conditioning (HVAC) work, conduit duct banks and associated junction boxes necessary for the infrastructure of the open road tolling system.

The AET Toll Zones shall be designed and constructed in conformance with the NCTA Project Specific Drawings and the NCTA AET Standard Drawings provided by the NCTA. The design and construction shall also conform to any applicable project aesthetic guidelines that may be provided by the NCTA.

The NCTA will enter into an agreement with a Toll Systems Integrator (**TSI**), to design, develop, install and implement an AET toll collection system for the project.

The Design-Build Team shall coordinate with NCTA in the final design and construction of the AET Toll Zone to readily accommodate the TSI's components without the need for modifications and to achieve the NCTA tolling performance requirements. Some information contained within this AET Toll Zone Scope of Work and the AET Standard Drawings is typical and may not be applicable for the specific tolling system provided by the TSI. The Design-Build Team shall consider all local conditions and proposed tolling equipment and produce the best possible fully engineered design for conduits, boxes and pads to support the tolls integration. However, based upon coordination with the TSI in the final design of the toll zone there may be a reduction, deletion or addition of items indicated within this scope of work, which if allowed and necessary, shall result in compensation adjustments in accordance with the 2012 *Standard Specifications for Roads and Structures*. Accurate record drawings shall be provided to NCTA at the completion of work indicating all infrastructure elements installed with locations indicated on the record set of drawings. Provide NCTA with four (4) sets of keys to all doors and cabinets. Provide NCTA with a binder containing equipment installation / maintenance manuals, warranty information, etc. for all installed equipment; provide electronic (soft) copies of this material on CD or DVD with the binder.

Design, construction drawings, record drawings, details, and specifications described within this scope are the responsibility of the Design-Build Team, unless noted otherwise. Provide all details and plans consistent with industry standards and professional requirements.

AET Toll Zone Location

Locate each AET Toll Zone at the general locations indicated on the AET Project Specific Drawings. Coordinate the final site location for the AET Toll Zones with NCTA. The final location shall be approved by the NCTA prior to proceeding with final design drawings.

Locate AET Toll Zones away from sources of Electro Magnetic Interference (EMI) including electrical power supply transformers, motors, Magnetic Resonance Imaging (MRI) and X-ray equipment, radio transmitters, radar transmitters, and induction heating devices in order to minimize interference with future communications cabling. Following preliminary design of the

AET Toll Zones, a Radio Frequency (RF) Spectrum Analysis will be performed by NCTA's Electronic Toll Collection System (ETCS) contractor in order to determine whether or not the proposed AET Toll Zone is free from electromagnetic conditions that may cause interference with the Radio Frequency Identification (RFID) technology.

Locate all AET Toll Zones in roadway areas where lane changing and weaving would not be expected. Do not locate AET Toll Zones under structures or on structures.

Do not place drainage (or other) pipes under the area between the first and second gantries or within 25 feet of any conduit or junction box. The design and construction shall ensure that surface stormwater is directed away from all in-ground junction boxes and equipment pads. The AET Toll Zone design shall be closely coordinated with the roadway design. Shoulder gutter or curb may be needed to assure stormwater is directed away for the junction boxes and equipment pads.

Protect access drive and gantry columns with guardrail and concrete barrier as shown in the AET Standard Drawings.

Toll Zone Location Geometric Design

For all Mainline and Ramp AET Toll Zones:

- Preferably, the AET Toll Zone should be located in a horizontal tangent roadway section of a minimum of 250' with limits from at least 100 feet prior to the first AET gantry structure centerline to at least 100 feet beyond the second AET gantry structure centerline.
- In the event the AET Toll Zone cannot be located in a horizontal tangent section, it may be located in a horizontal curve section with a radius of 2,000 feet or greater.
- Provide AET Toll Zone pavement cross-slopes which are uniform through the AET Toll Zone travel lanes. The cross-slope shall not exceed 2 vertical feet over the width of the section at the tolling point; for the purpose of this requirement, the "width of the section" is defined as the distance between the centerlines of the left and right shoulder.

For Mainline AET Toll Zones:

- Provide a minimum of 1000 feet clear line of sight for drivers approaching AET Toll Zones.

For Ramp AET Toll Zones:

- For off-ramps, locate AET Toll Zones a minimum of 350 feet from pavement gore point if possible. Pavement gore point is the intersection of the right outside edge of mainline shoulder and the left outside edge of ramp shoulder. Locate AET Toll Zones no closer than 1000' from ramp terminal (measured from the stop line or gore point).
- For on-ramps, locate AET Toll Zones a minimum of 350 feet from pavement gore point if possible. Pavement gore point is the intersection of the right outside edge of mainline shoulder and the left outside edge of ramp shoulder. Locate AET Toll Zones no closer than 400' from center of ramp terminal intersection or gore point.

- Locate AET Toll Zones in roadway areas where uniform vehicle speeds above 35 mph are expected.
- Provide a minimum 1000 feet clear line of sight for drivers approaching AET Toll Zones located on exit-ramps.

The toll zone location shall accommodate the shoulder acceleration and deceleration lengths required for access to the AET Toll Zones.

AET Toll Zone Vault

(A) Location

Do not locate the AET Toll Zone Vaults adjacent to areas that may be subject to the infiltration of water, steam, humidity, heat or other adverse atmospheric or environmental conditions. Avoid site locations that are below water level or near ponding water resulting from rainfall events. Grade the AET Toll Zone Site such that water flows away from the Vault.

Do not locate AET Toll Zone Vaults adjacent to sources of constant, excessive, low or high frequency noise, such as air-handling equipment, pumps, and the like.

Do not install equipment and utilities not specifically required for the equipment Vault, including utility pipes, wiring, cabling, ductwork or other electrical equipment within, through, or under the AET Toll Zone Vault.

Coordinate final positioning of the AET Toll Zone Vault at each site with NCTA.

(B) General Configuration

Design, engineer, fabricate, and erect an AET Toll Zone Vault for each AET Toll Zone as shown in the AET Standard Drawings. The AET Toll Zone Vault will house ITS equipment and roadside toll collection equipment (provided by the TSI).

Design AET Toll Zone Vaults to be typical in functionality and appearance throughout the project limits. Provide AET Toll Zone vaults of steel, concrete, or masonry construction that is aesthetically consistent with the applicable Aesthetic Design Guidelines and does not require painting and/or routine maintenance. Provide prefabricated, pre-cast or conventional masonry brick/block on-site construction. Wood construction is not allowed. Provide durable, watertight, secure, vault requiring minimal maintenance. Provide a roofing system with a minimum 20-year warranty. Residential type shingles are not allowed.

The Vault shall have dimensions shown in the NCTA AET Standard Drawings. Design finish ceiling height to be not less than 9 feet as measured from the finished floor elevation. The vault shall have a minimum R-24 insulation.

Design AET Toll Zone Vaults for a 2 hour fire rating, unless superseded by the North Carolina Fire Code standards. Provide a Class C fire extinguisher rated for the size of the equipment vault mounted at the entrance wall.

The vault shall be watertight and not allow water intrusion in extreme weather conditions. All conduit and utility penetrations shall be sealed watertight. The vault will be tested upon completion to verify the entire assembly is watertight.

(C) Architectural Plans

Prepare an architectural plans package for the AET Toll Zone Vaults, to include the Architectural, Structural, Electrical, HVAC, and Mechanical Plans, finish schedule and other documents necessary for a complete turnkey construction of the AET Toll Zone Vaults. Submit design calculations including structural, foundations, HVAC and electrical calculations for all components of the AET Toll Zone Vault with plans. A professional engineer registered in the state of North Carolina shall seal all designs, plans and calculations. Design AET Toll Zone Vault to meet all zoning and building code requirements. Prepare the AET Toll Zone Vault plans and designs in accordance with the North Carolina Building Code, latest edition. Provide facility plans that are accurate, legible, and complete in design, drawn to appropriate scales and furnished in reproducible form. Obtain all required permits to construct and occupy AET Toll Zone Vaults.

(D) HVAC

Furnish AET Toll Zone Vaults with one HVAC unit. The Design-Build Team shall design the HVAC system in coordination with the TSI. Current heat load requirements provided by the TSI require a minimum of a 2-ton HVAC unit for the mainline vaults and a 1 1/2-ton HVAC unit for the ramp vaults. These load requirements are based upon anticipated toll collection and ITS equipment. Actual heat loads to be used in design of the HVAC system shall be confirmed with the TSI.

Provide a thermostat and install heating and cooling ducts to minimize interference with wall surface area and conflicts with electrical and communication conduits, cable trays, and cabling.

(E) Doors

Provide exterior access doors that swing outward following the AET Standard Drawings. Provide exterior doors constructed of steel with steel frames. Design and install exterior door to accommodate future access-control keypads and proximity card readers, which shall be installed by the TSI. Provide keyed door locks for interim/back-up security. Provide a universal key so one key can access all locks. Provide door construction to suitably protect, and seal, and prevent the ingress of water, moisture, dust, gases and wind-driven rain into facility.

Doors, frames and hardware shall be extra heavy duty, full flush as defined in SDI A250.8 and shall have a minimum 2-hour fire rating in accordance with ANSI/UL 10C, “Positive

Pressure Fire Tests of Door Assemblies", unless superseded by the North Carolina Fire Code Standards.

Additionally, the doors to the AET Toll Zone vault shall be unobstructed such that a vehicle or portable lift could access these locations.

(F) Interior Finishes

Provide interior walls and ceiling fully sealed and painted with a durable high quality paint. The interior finish color should be high, bright white semi-gloss. Provide industrial anti-static non-slip tile or an epoxy flooring material.

(G) Lighting

Provide interior lighting consisting of T8 industrial fluorescent lighting fixtures with wall mounted occupancy sensor and manual on/off. Provide a minimum 50 foot-candles of illumination at a 30-inch work plane. Provide battery operated backup emergency packs with integral halogen heads at entrance/ exit. Provide lighting point-by-point calculations for interior lighting as part of Architectural Plan submittal.

Provide motion sensor control, exterior lighting to provide an average maintained lighting level of 1.0 foot-candle with a uniformity ratio of 3:1 to 4:1 for the access to the AET Toll Zone vault and the maintenance parking area. Provide full cut-off exterior lighting fixtures as defined by IESNA and that are International Dark-Sky Association (IDA) compliant. Provide lighting point-by-point calculations for exterior lighting as part of Architectural Plan submittal. Exterior lighting shall not illuminate the roadway in such a way that it would distract drivers. Exposed conduit on the exterior of the vault is not allowed for the exterior lighting system

AET Toll Zone Gantry Design Requirements

Design, engineer, fabricate, transport and erect watertight gantry structures to which the TSI will attach the tolling equipment. Design gantries in compliance with the *Standard Specifications for Structural Supports for Highway Signs, Luminaires and Traffic Signals*, *5th Edition,* as published by AASHTO using a minimum wind speed of 90 miles per hour.

Provide two structural gantries at each AET Toll Zone, to be similar in appearance and scale. Design each gantry to span the facility width as indicated on the AET Standard Drawings. Design gantries to ensure that the line of sight for cameras, camera lights, and overhead profilers/separators are not obstructed by the structure.

Design and construct gantry structure including scale, materials, color and finish aesthetically consistent with the applicable Aesthetic Design Guidelines. The front façade or paneling of the gantry shall conceal all AET Toll Zone tolling equipment (to the extent possible without impairing the tolling accuracy) and cabling from on-coming traffic and should present a straight and clean visual appearance, which is not detracted from by tolling equipment.

The upstream mainline gantry shall be designed to easily accommodate a DMS (DMS may not be installed initially). The requirements for the DMS are contained in the ITS Scope of Work.

Coordinate with the TSI and NCTA for final toll gantry loading and design. Include effect of any projected future roadway widening and additional tolling equipment in load analysis.

Provide vertical clearance in accordance with the AET Standard Drawings in order to maintain proper clearances for the toll collection equipment.

Design and construct an equipment-mounting frame and cantilevered overhead scanner frame as shown in the AET Standard Drawings to be used for the installation of the toll collection equipment. Design the gantry structure, equipment mounting frame, and overhead scanner frame to support the equipment shown in the AET Standard Drawings without vibration from wind forces or drafts from vehicles passing under the gantry.

A 12" (H) x 12" (W) divided enclosed watertight wireway shall be located on the top of the truss, concealed by the cladding face. A 24" x 24" x 12" enclosed watertight junction box shall be installed on the end of the wireway to accommodate connection of the conduits extending up through the column. The extent of the wireway is shown in the AET Standard Drawings. The wireway shall accommodate connections where needed to facilitate the running of cables to equipment located at the lane/shoulder centers and lane/shoulder lines. Wireways and boxes shall be grounded and bonded per NEC.

All conduit, risers and cabling requirements shall be coordinated with the TSI and NCTA.

Provide conduits terminating above the top of the gantry column and at the at-grade control/ junction boxes at the base of the gantry as shown in the AET Standard Drawings.

Design communications conduit connections between the conduit at the top of the column and the wireway junction box to accommodate a minimum 18" cable bend radius. Design power conduit connections between the conduit at the top of the column and the wireway junction box to accommodate a minimum 6" cable bend radius.

Ensure any aesthetic end cap treatment is designed for the column-top conduit / cables to be accessible for preventive or emergency maintenance.

The aesthetic treatment shall conceal all conduit and wireways from view of approaching traffic.

Locate hand-holes, stub-outs, junction boxes, or control boxes, for access to equipment cabling and electrical wiring out of view of approaching traffic.

AET Toll Zone Driveway

Provide an asphalt driveway/parking area as shown in the NCTA AET Standard Drawings. Provide a driveway to the right side of the direction of travel.

Foundation/Sidewalk/Concrete Maintenance Pad

As shown in the AET Standard Drawings, construct concrete pads that will serve as the Vault foundation (will serve as maintenance pad, sidewalk, etc.) and equipment cabinet foundations. The Vault and equipment cabinet foundations shall be 8-inches thick minimum. Design and grade site so water flows away from the Vault slab and equipment pads.

The sidewalk and pad areas shall have a brushed finish.

Locate the generator on the Vault foundation concrete pad as detailed in the AET Standard Drawings.

The AET Toll Zone Vault shall include a 6-inch curb that separates the foundation from the adjacent parking surface. Refer to the AET Standard Drawings for additional requirements. Provide a ramp from the adjacent driveway centered on the door for loading/unloading.

Screen Wall

Design decorative screening/wall to visually shield the motorist from viewing the AET Toll Zone vault, maintenance pad, and adjacent parking area. Provide decorative screening/wall around two sides of the AET Toll Zone vault, as shown in the AET Standard Drawings. When roadways are located on two sides of the AET Toll Zone vault, provide a decorative screening/wall around three sides of the AET Toll Zone vault, screening the traffic facing sides and the rear side of the vault. Design decorative screening/wall consistent with the applicable Aesthetic Design Guidelines. Between the wall and the Vault, provide a washed stone (or similar) surface to facilitate drainage and maintenance of conduit entering the Vault.

AET Toll Zone Conduit and Junction Boxes

Design and construct required conduits and cabling infrastructure necessary to establish the communications path between fiber-optic trunk line, AET Toll Zone vaults, gantries, cabinets, and junction boxes. Install the number and size of conduits, boxes and related equipment specified in the AET Standard Drawings and the ITS Scope of Work.

Ensure junction boxes are provided such that the last set of junction boxes before a conduit route enters a vault are not placed higher in elevation than the vault slab itself. This will prevent water-filled boxes from draining into the vault.

Coordinate with NCTA throughout the conduit and junction box design and installation.

Provide separation between power and communications conduit as specified in the AET Standard Drawings.

Provide underground concrete-encased conduit duct bank when crossing new roadways. Install conduit duct banks such that there is a minimum of 18 inches of cover from pavement subgrade to the top of the duct bank. For duct bank crossings of existing roads, bore or open-cut as site conditions dictate. Trenched conduit, directional bores or jack and bore shall be in accordance with the 2012 *Standard Specifications for Roads and Structures*.

Terminate conduit through the floor slab of AET Toll Zone vaults above finished floor elevation.

Furnish conduits stubbed out at all concrete pads with plastic bushings (or comparable material) to prevent cables from being damaged when being pulled through conduits or shifting during use. Clearly label each end of the conduits and include conduit plugs, pull line in each conduit, and tracer wire (if needed) per Article 1091-3 of the 2012 *Standard Specifications for Roads and Structures*.

Provide galvanized metallic conduit in above ground installations and where indicated on the AET Standard Drawings.

Electrical

Provide electrical service to the AET Toll Zone Vaults.

Mainline AET Toll Zones:

- Electrical service to the Mainline AET Toll Zones shall be 120/240V single-phase service.
- Provide an operating voltage of 120/240V at minimum 200 amps.
- Provide electrical power panel in a conventional NEMA 1 surface mount panel board enclosure, which supplies power to the AET and ITS equipment.
- Provide at a minimum a 200 amp Main Breaker with a minimum of 42 circuits.
- Provide at a minimum one (1) two pole breaker for UPS, coordinated with the TSI and 20% spare breakers at 20 amps rated at minimum 18K AIC.
- Provide a main ground bus bar connected to the building grounding system
- If power is provided from a single point for multiple Toll Vaults or locations, a Main Distribution Panel may be necessary.

Ramp AET Toll Zones:

- Electrical service to the Ramp AET Toll Zones shall be 120/240V single-phase service.
- Provide an operating voltage of 120/240V at minimum 100 amps.
- Provide electrical power panel in a conventional NEMA 1 surface mount panel board enclosure, which supplies power to the electronic toll equipment.
- Provide at a minimum a 100 amp Main Breaker with a minimum of 24 circuits.
- Provide at a minimum one (1) two-pole breaker for UPS, coordinated with the TSI and 20% spare breakers at 20 amps rated at minimum 18K AIC.
- Provide a main ground bus bar connected to the building grounding system
- If power is provided from a single point for multiple Toll Vaults or locations, a Main Distribution Panel may be necessary.

Coordinate with the TSI and NCTA in the design of the electrical loading, ampere capacity rating, circuit poles, etc. for the final power panel design.

Coordinate with the TSI and NCTA to establish electrical power and communication/data service requirements for each toll gantry.

Provide building electrical power to lights, switches, receptacles, HVAC system and other infrastructure items for operating and managing the AET Toll Zone vault.

Provide the AET Toll Zone vaults with 125 volt rated duplex receptacles at approximately 10-foot centers at 18 inches above finished floor, as shown on the AET Standard Drawings.

Coordinate with the local utility company(ies), make application(s) in the name of NC Turnpike Authority, and pay all deposit fees to provide necessary electrical and communication services for the AET Toll Zones. The Design-Build Team shall be responsible for any application and connection fees. The Design-Build Team shall be responsible for any utility service installation from the power meter to the AET Toll Zone vaults' power panels. The Design-Build Team will not be responsible for paying the monthly power bills.

For situations where toll equipment cabinet pads "B" and "D" are required (see AET Standard Drawings), provide raw power service run from Toll Zone Vault to toll equipment pads. Provide subpanels for raw and UPS power on these toll equipment pads. Size and provide breakers for raw power panel.

Grounding

Provide a master grounding system at all new and revised AET Toll Zone Vault electrical service points unless otherwise specified. In addition to National Electrical Code (latest edition) requirements, test grounding electrode resistance at connection point to electrical service ground bus for a maximum of 20 ohms. Furnish and install additional ground rods to grounding electrode system as necessary to meet test requirements. Submit a completed Grounding Test Results form. Provide a length of marker tape 12-inches below finished grade directly over grounding electrodes and conductors.

Lightning Protection

Design and install Lightning Protection System for the AET Toll Zone Vaults and Gantries in conformance with and certified by the Lightning Protection Institute (L.P.I.) Installation Code LPI-175. Products shall comply with Underwriters Laboratories, Inc. Master Label Code 96A and NFPA 780. The lightning protection system installer shall submit a UL Master Label and L.P.I. system certification upon completion of the work.

Standby Generator

Provide standby generator to power each complete AET Toll Zone to include vault, toll and communications equipment, video tolling cameras and lights, sensors, DMS on gantries, lighting, electrical system, security system, monitoring and HVAC systems. Size the propane standby generator to provide 100 percent operation of the AET Toll Zone backup power plus 25% additional capacity. The standby generator is anticipated to be 45 kW for individual ramp applications and 60 kW for mainline applications (one generator sufficient for both directions). This anticipated sizing is based on: 2 ton AC unit; 15 KVA UPS; 1 DMS at the ramp and 2 DMS at the mainline; no street lighting or other connections to roadway systems. Provide a generator disconnect as per the AET Standard Drawings.

Where toll zone configurations differ from those shown in the NCTA AET Standard Drawings, alternate sizing will be necessary and shall be coordinated with NCTA.

Propane tanks shall be sized based on the actual maximum load for a minimum of 72 hours. Provide standby generator with an automatic transfer switch designed to run after 5 seconds of power outage. Evaluate and include a method for reducing the noise impact caused by the standby generators to residences near proposed AET Toll Zone vault locations.

The standby generator shall be provided with an outdoor-rated housing and mounted on the concrete pad adjacent to the vault with clearances as shown on the Standard Drawings, unless additional clearance is required by code. Include a muffled exhaust system for the generator.

Propane Tank

Provide a single propane fuel tank with a dry level sensing device (hard-wired, 4-20mA, 0-5 VCD or 0-10 VDC typical) that will interface with future vault automation system provided by others. The propane fuel tank size is anticipated to be 500 gallons for individual ramp applications and 1000 gallons for mainline applications (one tank sufficient for both directions). Install a transfer switch to interact and directly communicate via contact closures with building automation system for critical status indications. Provide Tolls Systems Integrator with Interface Control Documents (ICDs) as a part of construction submittals for generator, transfer switch, and propane tank to facilitate communications. Design propane fuel tank system compliant with all local, State, and Federal requirements and comply with NFPA 54, National Fuel Gas Code.

UTILITIES COORDINATION SCOPE OF WORK (11-07-11)

General

This scope of work only governs those utilities that are not specifically mentioned in the Utility Construction Scope of Work. Should any utilities not described in the Utility Construction Scope of Work be encountered during design or construction of this project, the Design-Build Team shall coordinate the relocation or adjustment of these utilities in accordance with this scope of work.

Overview

The Design-Build Team shall obtain the services of a Private Engineering Firm (PEF) knowledgeable in the NCDOT Utility Coordination Process, involved with utility relocation / installation and highway construction. The Design-Build Team shall be responsible for coordinating all utility relocations. Coordination shall include any necessary utility agreements when applicable. The NCTA will be responsible for non-betterment utility relocation cost when the utility company has prior right of way / compensable interest. The utility company shall be responsible for the relocation costs if they can not furnish evidence of prior right of way or a compensable interest in their facilities. The Design-Build Team shall be responsible for determining the cost responsibility for the utility relocations. The Design-Build Team shall be responsible for all costs associated with utility relocations due to haul roads and / or any other temporary conditions resulting from the Design-Build Team's methods of operation or sequence of work. The Department will be the approving authority for all utility agreements and approval of plans. The NCTA will provide a preliminary set of Utility by Others plans.

Preparation for relocating utilities within the existing or proposed highway Right of Way

The Design-Build Team shall be required to use the guidelines as set forth in the following:

- *NCDOT Utility Manual - Policies & Procedures for Accommodating Utilities on Highway Right of Way*
- *Federal Aid Policy Guide- Subchapter G, Part 645, Subparts A & B*
- *Federal Highway Administration's Program Guide, Utility Adjustments & Accommodations on Federal Aid Highway Projects*
- *NCDOT Construction Manual Section 105-8*
- *NCDOT Right of Way Manual - Chapter 16 Utility Relocations*
- *NCDENR Public Water Supply - Rules governing public water supply*
- *NCDENR Division of Water Quality - Title 15A - Environment and Natural Resources*

The Design-Build Team shall be responsible for confirming the utility locations, confirming the type of facilities, identifying the utility owners and determining the cost responsibilities in order to coordinate the relocation of any utilities in conflict with the project.

Arrangements for Protection or Adjustments to Existing Utilities

(A) The Design-Build Team shall arrange with the utility owners for required new installations, adjustments, relocations or removals where the Design-Build Team and utility company, with concurrence from the NCDOT, determine that such work is essential for highway safety and performance of the required construction.

The Design-Build Team shall not commence work at locations where the highway construction is adjacent to utility facilities until making arrangements with the utility company to protect against damage that might result in expense, loss, disruption of service, or other undue inconvenience to the public or utility owner. The Design-Build Team shall be responsible for damage to the existing or relocated utilities resulting from his operations. In the event of interruption of any utilities by the project construction, the Design-Build Team shall promptly notify and cooperate with the owner in the prompt restoration of service.

The Design-Build Team shall accommodate utility adjustments, reconstruction, new installation and routine maintenance work by utility owners.

(B) In the event of a utility conflict, the Design-Build Team shall request that the utility owner submit relocation plans (Highway Construction Plans to be provided by the Design-Build Team to Utility Owners) that shows existing utilities and proposed utility relocations for approval by the NCDOT.

The Design-Build Team shall be required to submit five (5) copies of the Utility Relocation Plans to the NCDOT for review and approval prior to relocation work beginning. If the Design-Build Team determines the cost to be borne by NCTA, the Design-Build Team shall be required to submit five (5) copies of a detailed utility relocation estimate and copies of verification of compensable interest. The Design-Build Team shall also be responsible for submitting the appropriate agreements to be used with the relocation plans (See Agreements under line items V and VI). After the review process is complete, one (1) copy of the Utility Relocation Plans, executed agreements and any necessary comments will be returned to the Design-Build Team. If the Utility Relocation Plans are approved subject to changes, it shall be the Design-Build Team's responsibility to coordinate these changes with the appropriate utility company.

(C) The cost for non-betterment utility relocation due to the highway construction will be the responsibility of NCTA when the utility company has prior right of way / compensable interest. As stated in the overview, the Design-Build Team shall be responsible for determining cost responsibility / compensable interest. A compensable interest is defined as follows:

1. Existing or prior easement rights, either by recorded right of way or adverse possession (Utility located outside the existing highway right of way that has been occupying the same location for 20 years).

2. Entities covered under *General Statute 136-27.1 and 136-27.2.* Statute requires the NCDOT to pay the non-betterment cost for certain water, sewer and gas relocations.

3. Entities that have a joint-use agreement that constitutes a compensable interest with entities that have existing or prior easement rights.

The cost in relocating CATV due to the highway construction shall be the responsibility of the CATV Company; however, under the following conditions the NCTA will bear the relocation expense:

1. If the CATV Company can validate a recorded easement for facilities outside the NCDOT right of way.

2. The adjustment is needed on existing utility poles to accommodate for a proposed NCDOT Traffic Management System Fiber Optic Communication Cable Project.

The CATV will not be permitted to place poles within the highway right of way but will be allowed down guys for their facilities within the highway right of way. Under most circumstances, the CATV Company will continue a joint-use attachment with the local Power and Telephone Company. If the proposed CATV relocation places buried facilities within the highway right of way, plans and encroachment agreements shall be required by NCDOT.

(D) If the Design-Build Team elects to arrange with a utility company to incorporate a new utility installation or relocation as part of the highway construction, the utility work done by the Design-Build Team and the associated costs for the work shall be negotiated and agreed upon between the Design-Build Team and the utility company.

If the Design-Build Team is requested, in writing, by an entity to relocate, upgrade or incorporate new water and sewer facilities as part of the highway construction, designs shall be coordinated with the Utility Owner and NCDOT. The associated design and construction costs shall be negotiated and agreed upon between the Design-Build Team and the utility company. The Design-Build Team shall develop designs; prepare all plans for needed agreements and permits; submit permits directly to the agencies and obtain approval from the agencies. The Design-Build Team shall be responsible for all permit fees.

If the Design-Build Team elects to make arrangements with a Governmental Agency or any other utility owner for proposed utility construction, in which the Agency / Utility Owner shall be responsible for the costs of work to be performed by the Design-Build Team, the Design-Build Team shall be responsible for negotiating all costs associated with the proposed construction. Once the Design-Build Team and the Agency / Utility Owner agree on a plan and a lump sum estimated cost for the utility construction, the Design-Build Team shall be responsible for submitting five (5) sets of 11 x 17 utility construction drawings to the NCDOT for further handling. Each set shall include a title sheet, plan sheets, profiles and special provisions if available. Also, a letter from the Agency / Utility Owner agreeing to the plans and lump sum cost must accompany this package. The NCTA

will reimburse the Design-Build Team the estimated lump sum cost under a Supplemental Agreement. The necessary Utility Agreement to the Agency / Utility Owner for reimbursement shall be a two party agreement between the Department and the Agency / Utility Owner; and will be developed and executed by the NCDOT.

(E) The Design-Build Team shall be required to utilize the NCDOT Utility Encroachment Agreements as necessary in relocating utilities. The Encroachment Agreements shall be used under the following conditions:

1. If a utility company is not occupying a valid right of way / compensable interest and the proposed relocation will place the relocated utilities within the existing or proposed highway right of way.

2. For **all** new utility installations within the existing or proposed highway right of way. This includes all water, sewer and gas lines owned by entities covered under *General Statute 136-27.1 and 136-27.2.*

(F) The Utility Relocation Agreements and encroachment agreements are available from the NCDOT. See Pages 59 and 60 of the *NCDOT Utility Manual on Policies & Procedures for Accommodating Utilities on Highway Right of way* for the different types of encroachment agreements available for use.

Preparation for Communication Cables / Electrical Services for Lighting, Toll Gantries, & AET Facilities

(A) Prior to establishing the location for new meter poles, the Design-Build Team shall coordinate with the local Power Distribution Company concerning accessibility of E/C Service and safety in maintenance of the meter.

(B) Prior to installation, the Design-Build Team shall provide plans for review and approval for all service taps that require a parallel installation within the highway controlled access (C/A).

Parallel service installations within C/A shall be buried and located as close to the R/W line as practical. Only due to unusual circumstances will parallel aerial service installations within C/A be allowed. The Design-Build Team shall justify the allowance of parallel aerial service installation and obtain NCDOT approval prior to installation.

(C) The Design-Build Team shall be responsible for all coordination activities and costs required for the utility company to provide service taps. Prior to the Design-Build Team developing the associated designs and / or instructing the utility company to proceed with providing the service taps, the Design-Build Team shall obtain approval of the service tap locations from the NCDOT.

Preparation for Adjusting Existing Utilities due to Proposed Traffic Management Systems Fiber Optic Communication Cables

(A) See Signals Scope of Work.

(B) The Design-Build Team shall be responsible for the coordination activities required for the utility company to adjust or relocate existing facilities to accommodate the proposed ITS Communication Cable. The NCTA shall approve adjustments and relocations of existing facilities prior to the Design-Build Team developing the associated designs. The NCTA will be responsible for utility adjustment or relocation costs associated with the proposed ITS Communication Cable installation.

RIGHT OF WAY SCOPE OF WORK (10-11-11)

Due to its impact on the overall financial viability of the project, reducing the amount of right of way and easements needed and the number of parcels impacted by the project is critical. Based upon the Functional Design Map dated June 9, 2010, it is anticipated that approximately 850 parcels will need to be acquired with 344 residences, 38 business relocations, 1 farm and 3 non-profits. The Design-Build Team is expected to design the project to minimize the amount of right of way, temporary easements, and permanent easements needed for constructing the project; reduce the number of parcels (claims) impacted by the project; and reduce the number of residential and/or non-residential relocations. In reducing right of way and easements, the Design-Build team shall consider future project maintenance. The right of way width does not have to be symmetrical or of uniform width throughout the project limits. In addition, control of access along the Y-lines should be evaluated and adjusted, in accordance with the *NCDOT Roadway Design Manual*, to limit the properties impacted and minimize right of way costs.

The Design Build Team shall provide in their Technical Proposal, an area data sheet, which is specific to the design, for all parcels that will require acquisition of right of way or easement(s) and shall also designate any parcels which will require either residential or non-residential relocation. The area data sheet shall clearly identify any areas outside the right of way shown on the Functional Design Map dated June 9, 2010.

NCTA Responsibility

The NCTA will acquire all right of way needed to construct this project within the parameters outlined in this provision. As part of the acquisition process, the NCTA will perform appraisals or value findings, appraisal reviews, negotiations, condemnation maps, condemnation, title reports and closings, asbestos assessment and abatement, relocation services, and all other services required for acquisition of right of way and easements based upon the parcel priority provided by the Design-Build Team. The Design-Build Team shall not consider the advance acquisition of any parcels in the development of their Proposal or CPM schedule. The NCTA is not guaranteeing that any parcels will be acquired by contract execution.

All right of way services will be performed in accordance with the General Statutes of North Carolina, including but not limited to Chapters 133 and 136, as amended, and in accordance with the requirements set forth in the North Carolina Department of Transportation's *Uniform Appraisal Standards and General Legal Principles for Highway Right of Way Acquisitions*, the *North Carolina Department of Transportation's Right of Way Manual*, the *North Carolina Department of Transportation's Rules and Regulations for the Use of Right of Way Consultants*, the *Code of Federal Regulations (49 CFR Part 24 and 23 CFR Parts 710, 750, and 751)*, including the Uniform Relocation Assistance and Real Property Acquisition Policies Act of 1970, as amended.

The NCTA will retain right of way consulting firms to assist with right of way acquisition and relocation services. These firms will work directly for and be compensated by the NCTA. The NCTA will prioritize the firms' work based upon the priorities furnished by the Design-Build Team and other needs identified by NCTA. The number of right of way consulting firms and respective areas of responsibility have not been determined at this time.

Upon selection of the right of way consulting firms and prior to contract award, the Design-Build Team shall have no direct contact with the selected right of way firms, in any manner, except as identified herein. After contract award, the NCTA's project manager and the right of way consultants' project manager will attend project meetings to update acquisition, relocation, and property availability status and coordinate/adjust NCTA's acquisition activities to the CPM priorities. Weekly status reports will be provided to the Design-Build Team throughout the right of way acquisition process and all right of way files will be maintained within Constructware.

Revisions/updates to property lines within the NCTA provided PRL file shall be performed by a Professional Land Surveyor, licensed in North Carolina. The NCTA will be responsible for any updates to this file, which occurs during the right of way acquisition process.

Design-Build Team Responsibilities

For the purpose of prioritizing right of way parcels, the Design-Build Team shall divide the project into segments which will coincide with the areas of responsibility assigned to the selected right of way firms. Within each segment, the Design-Build Team shall provide their parcel priority for right of way acquisition and relocations within 14 days after execution of the contract. This parcel priority shall be inserted within the project CPM Schedule as separate activities, which shall include at minimum the durations from right of way plan acceptance, as detailed in Table 1 below. Unless otherwise noted herein, the NCTA will acquire, or otherwise gain right of entry to these parcels in the respective timeframes contained within the table.

Table 1

Parcel Priority Category	Number of Allocated Parcels for Each Segment	Calendar Days for Access from Acceptance of Right of Way Plans
A	40	120
B	50	150
C	50	180
D	Remainder of Parcels	240

In addition to the above acquisition or right of entry timeframes, the Design-Build Team shall account for the following time intervals, which run consecutively, within their project CPM Schedule: (e.g. an "A" priority residential parcel, with relocation and asbestos abatement, will require 255 days)

- Residential Relocation 90 days
- Business Relocation 120 days
- Asbestos abatement 45 days
- Grave Relocations 180 days

The Design-Build Team shall use reasonable care in determining whether there is reason to believe that property to be acquired for rights of way may contain concealed or hidden wastes or other materials or hazards requiring remedial action or treatment. When there is reason to believe that such materials may be present, the Design-Build Team shall promptly notify NCTA

of the potential presence of such materials. In the event that unknown archaeological sites or unknown hazardous materials are revealed during the contract, the NCTA may require additional calendar days beyond that shown in the table to gain access to that parcel; however, in such case, the contract time will be extended in accordance with Article 108-10 of the Standard Special Provision entitled "Division One", unless otherwise detailed in the Contract.

Early in the design process and prior to Right of Way Plan submittal, the Design-Build Team shall conduct a meeting with the NCTA's Director of Construction and Right of Way Program Manager to discuss the specifics of each parcel impacted by the project. During this meeting, the NCTA may direct plan revisions to reduce right of way costs. If such revisions result in price adjustments to the design-build project, compensation will be provided in accordance with Section 104 of the 2012 *Standard Specifications for Roads and Structures* and as amended by the Standard Special Provision entitled "Division One".

When the Design-Build Team revises previously submitted right of way plans, the Design-Build Team shall provide the Engineer and NCTA's Right of Way Project Manager a listing of the plan changes, a listing of the affected parcels and, when right of way and/or easements beyond that previously acquired is required, the priority for acquiring the additional right of way and/or easements. If revisions occur during the right of way acquisition process, which are not directed by NCTA, the aforementioned time intervals will commence from the date of the revised plans. The Design-Build Team shall revise the CPM schedule to reflect the revised acquisition timeline for the parcels affected.

The Design-Build Team shall provide to the NCTA area data sheets based upon the accepted right of way plans. The area data sheets shall provide parcel information listed by ascending parcel number and shall include: parcel number, right of way plan sheet number, property owner(s) name, total area, area taken, area remaining right, area remaining left, construction easement area, permanent drainage easement area, temporary drainage easement area, and permanent utility easement area.

The Design-Build Team shall develop and include with their plans, right of way plan sheets, which shall be limited to the following information: alignments (survey lines), existing property lines, existing right of way, topography, existing easements, proposed right of way with monuments and flags, proposed easements with flags, proposed limits of construction. These sheets shall not include design elements, data and labels not pertinent to the acquisition of right of way.

The Design-Build Team shall generate metes and bounds legal descriptions for each area of property acquisition, from MicroStation CADD files, and provide these in Microsoft Word format to NCTA's Right of Way Project Manager. The descriptions and plan sheets will be utilized by the NCTA during right of way acquisition. If the property lines are revised, the Design-Build Team shall provide revised legal descriptions and right of way plan sheets for properties affected by the revision.

The Design-Build Team shall perform the initial right of way staking for the purpose of initial contact with owners, as well as final staking of right of way and placement of rebar, metal caps and carsonite witness posts. The Design-Build Team shall establish, relocate, and/or replace

rebar and metal caps as necessary to reflect the accepted right of way plans developed by the Design-Build Team. The NCTA will provide the carsonite witness posts and metal caps.

Structures or appurtenances, including wells and septic systems, partially located within an easement or right of way must be removed in its entirety, unless provisions are made and agreements reached with a property owner to cure the structure or appurtenance prior to construction. Any portion of a structure or appurtenance located beyond the right of way or easement areas shall be encompassed in temporary construction easements to facilitate their removal during construction. Asbestos inspections and abatement will be the responsibility of NCTA; however the Design-Build Team shall be responsible for demolishing and disposing of all existing buildings within the right of way, easements, and acquired residues. Septic systems will be removed or cut off at the right of way line by the Design-Build Team. The Design-Build Team shall be responsible for sealing abandoned wells within the right of way, easements, and acquired residues.

The Design Build Team shall be responsible for identifying any special conditions / restrictions associated with utility easements being purchased as part of this project and shall notify NCTA of such special conditions or restrictions.

The NCTA will be responsible for preparing all maps associated with condemnation. The Design-Build Team shall provide the latest MicroStation files such that the condemnation mapping can occur promptly. The Design-Build Team shall retain a list of parcels acquired by condemnation to compare against any plan revisions. NCTA will be promptly notified if plan revisions affect a parcel on which condemnation has been filed. The Design-Build Team shall provide revised area data sheets and plans detailing revised impacts to the condemned parcel. The appraisal, condemnation map, and an amended condemnation filing with the clerk of court are required prior to access being provided to the revised area.

Contract Time

The calendar days in Table 1 will be considered binding in regard to contract time.

In the event that a parcel is not obtained, or otherwise granted right-of-entry, within the timeframe shown in Table 1, the NCTA will entertain requests for additional contract time. If the Design-Build Team demonstrates, in accordance with Article 108-2 of the Standard Special Provision entitled “Division One” contained elsewhere in this RFP, to the satisfaction of the NCTA that the delay in right of way or easement availability affects their controlling operation, the contract time will be extended one calendar day for each calendar day delay beyond the timeframe shown in the table or otherwise adjusted in the NCTA’s final response. In no case shall further contract time extensions be granted due to further indirect delays (such as weather, seasonal construction limitations, or borrow availability) that may result from the delay in parcel availability.

Any change to the priority list after project award that accelerates the Design-Build Team’s expectation for a parcel’s availability will nullify this consideration for contract time extension for that parcel. Furthermore, any change to the accepted right of way plans that require second takings or revised limits will nullify this consideration for contract time extension for such parcels.

CONSTRUCTION ENGINEERING & INSPECTION SCOPE OF WORK (11-07-11)

This Scope of Work describes and defines requirements for the construction inspection, materials sampling and testing, and Construction Administration required for this project also hereinafter referred to as "Construction Engineering & Inspection" (CEI). The Design-Build Team shall employ a private engineering firm to perform Construction Engineering & Inspection for all work required under this contract. This private engineering firm is to be a separate entity, unaffiliated with the Design-Build Team in any way. Private engineering firms must be prequalified under the NCDOT CEI prequalification procedures prior to bid submission. The term "pay application" as used herein is synonymous with "payment request" elsewhere in the contract documents.

(A) General

The CEI firm shall be responsible for the Construction Administration, which is defined as all activities, duties, or responsibilities required to ensure the project is constructed in accordance with the RFC plans, Contract, Specifications, and procedures set forth herein.

Contract Administration will be performed by the NCTA and will include duties such as submittal tracking and RFI response, development and execution of change orders, public inquiry response, media interaction, payroll, subcontract agreement requests, and utility agreement execution. Verification testing will be performed by the NCTA to validate the Quality Control test results and will be used in the quality acceptance decision process. Independent Assurance (IA) testing will be performed by the NCDOT Materials and Tests Unit, unless noted otherwise herein.

The CEI firm shall administer the construction in accordance with the latest *NCDOT Construction Manual* and any other referenced manuals.

The CEI firm shall utilize effective control procedures such that the construction of the project is performed in reasonably close conformity with the Plans, Specifications, and Contract provisions.

The CEI firm shall be responsible for providing qualified technical personnel in appropriate numbers at the proper times such that all Construction Administration responsibilities are effectively carried out. Qualified technicians shall have all certifications necessary to perform the work required under this contract. A table detailing number of project managers, engineers and technicians, per yearly quarter, shall be provided within the Technical Proposal. This table shall establish the minimum staffing level which shall be provided during project construction, unless otherwise approved by the NCTA.

Work shall be performed in accordance with the established NCDOT standard procedures and practices, unless otherwise stated herein. The CEI firm shall be familiar with NCDOT standard procedures and practices as set forth in the latest *NCDOT Construction Manual* and associated manuals and also with informal procedures and practices for Construction Administration used by NCDOT. The private engineering firm shall be familiar with and adhere to all policies and procedures established by the Garden Parkway Project Management Plan. Failure on the part of the CEI firm to perform this scope of work as

expected will result in suspension of all work on the project until adequate inspection processes are in place.

All documents produced or obtained in the performance of this work shall be either directly entered or uploaded into Constructware per NCTA procedures. Documents should, at minimum, be updated weekly, unless otherwise stated herein. The CEI staff's use of portable computers with wireless internet access for retrieving and documenting project information is a requirement of this contract.

The CEI firm shall be responsible for administering the DBE provisions contained within the RFP to ensure the Design-Build Team is compliant. Documentation shall be provided with the pay application to collaborate the Contractor's payment tracking reports.

(B) Work Standards

The CEI firm shall document any observed omissions, substitutions, defects, and deficiencies noted in the work, advise the Engineer accordingly, and then recommend and direct corrective action necessary, including suspending the work if necessary. The CEI Firm shall develop and submit to the Engineer a non-conformance report for any defects or deficiencies noted in the work. This report shall contain a detailed description of the defect or deficiency, digital photos, original and subsequent testing, recommended corrective action, corrective work performed, follow-up testing to ensure compliance and acceptability, and daily diaries of events associated with the defect or discrepancy.

The CEI firm shall make normal and routine project decisions in a timely manner and consistent with NCDOT policies and procedures with general guidance by the Engineer.

The CEI firm shall perform Quality Control (QC) sampling and testing, that **may** be used in the acceptance decision, at or greater than the frequencies described in the NCDOT Minimum Sampling Guide. Validation of the QC test data will be performed by the NCTA in accordance with the NCTA's *Quality Assurance Program for Design-Build Projects*. Laboratory testing performed by the Design-Build Team shall be performed by a facility that is approved by the NCDOT and is an AASHTO Accredited facility that participates in the AASHTO Materials Reference Laboratory / Cement and Concrete Reference Laboratory (AMRL/CCRL) proficiency testing program for the tests being performed. Technicians performing sampling and testing shall be qualified in accordance with NCDOT training and certification requirements for the specific materials, in accordance with AMRL/CCRL accreditation requirements.

In processing partial payment requests, the CEI firm shall adhere to the requirements identified in the "NCTA Payment Application Procedures for Design-Build Projects". The CEI firm shall make and record such measurements as are necessary to assure that minimum sampling and testing requirements are being met and to calculate and document quantities for payment as required. These quantities shall be categorized to correspond with the Design-Build Team's CPM activities and pay applications. The CEI firm shall submit the certified statement below (sealed by the project manager), to be included with each pay

application, stating that the appropriate amount of sampling and testing has been performed.

This is to certify that sufficient materials have been received and that the results of the Quality Control samples for Pay Application Number ___ indicate that the materials incorporated in the construction work and the construction operations controlled by sampling and testing are in conformity with the approved plans and specifications. Such results compare favorably with the results of the Verification sampling and testing. Exceptions to the plans and specifications are noted below.

The CEI firm shall monitor on-site and off-site construction operations and inspect all materials entering into the work such that the quality of workmanship and materials are completed in reasonably close conformity with the plans, specifications, and other contract provisions. The CEI firm shall keep detailed, accurate daily records of construction operations and significant events that affect the work.

The CEI firm shall utilize a computer application, acceptable to the Engineer, that integrates coordinately correct electronic plans (three dimensional models optional) with physical GPS location, construction oversight processes, and asset inventory / quantity management. Such computer application shall be Trimble SCS900 Data Manager or an approved equal. Such application and equipment shall be used in conjunction with GPS machine guidance systems in providing process controls (e.g. verifying clearing and permit limits; checking slope grades and rough grade elevations; measuring earthwork and other quantities). Otherwise, inspection operations will need to be verified using traditional surveying methods detailed in Article 801.

The CEI firm shall be responsible for verifying the Design-Build Team's surveying and layout of critical project elements and shall provide the NCTA a comprehensive list of these elements for approval.

The CEI firm shall maintain a complete and accurate record of all activities and events relating to the project and a record of all construction work completed, including quantities of materials used and work accomplished. The CEI firm shall enter this information, on a daily basis, directly into the Daily Reports Module within Constructware. Uploading of the reports into this module will not be acceptable.

The CEI firm shall enter each work item and the estimated quantity as detailed in the Table of Quantities, in the NCDOT Highway Construction and Material Systems (HiCAMS) computer application. The work items and estimated quantities will be revised to reflect updates to the Table of Quantities. The CEI firm shall record the actual quantity of each work item satisfactorily completed into HiCAMS with each pay application. Quantities shall be based on daily records or calculations.

The CEI firm shall establish and set up the Contract Bill of Materials within HiCAMS.

The CEI firm shall maintain records of all sampling and testing accomplished. The CEI firm shall record sampling and testing data along with material receipts, etc. in HiCAMS. These documents shall be retained within Constructware.

The CEI firm shall maintain records in accordance with the procedures outlined in the latest NCDOT Construction Manual for "Weight Tickets as a Basis of Payment" for price adjustments for asphalt binders for plant mix. The CEI firm shall summarize and submit these records for review and approval by the Engineer with each pay application that includes price adjustments for asphalt binders for plant mix.

The CEI firm shall submit a summary of work items and ticket books for each pay application that includes a fuel price adjustment.

The CEI firm shall provide timely interpretations of the plans, specifications, and contract provisions. The CEI firm shall consult with the Engineer when an interpretation involves complex issues or may have an impact on the cost or time to perform the work or is known to be an area of dispute with the Design-Build Team. The CEI firm shall stop the work when necessary to ensure contract compliance.

The CEI firm shall monitor each construction operation to ensure that no construction activities violate the requirements of any permits. The CEI firm shall notify the Design-Build Team immediately of any observed violations or potential violations that require immediate resolution. Permit violations shall be immediately reported to the Engineer.

The CEI firm shall inspect all traffic control devices and other safety related items each working day to ensure that all measures are properly installed and maintained. Traffic Control inspections shall be documented in traffic control review logs or daily diaries. Checks shall be made after significant storms and/or high winds. A detailed Traffic Control report shall be performed, including pictures, video, drawings, plan verifications, etc., after any major traffic accident and/or motorist involved fatality within the project limits. Traffic control shall match the released for construction plans, appropriate work and/or conditions at all times and shall be monitored and enforced by the CEI firm.

The CEI firm shall perform erosion control inspections, at a minimum, once per week and after every significant rainfall event in accordance with the NCDOT, NPDES Permit. The NPDES erosion report shall be uploaded to Constructware directly upon completion. The CEI firm shall align technician forces with the Design-Build Team's grading operations and segmenting of the project to ensure erosion and sediment control compliance. In addition to the daily monitoring of erosion control measures, the CEI firm shall inspect all erosion and sediment control measures at the end of each working day to ensure all measures have been properly installed or reinstalled if the measures were removed to perform other work. Erosion Control deficiencies shall be provided to the Design-Build Team's Project Manager and the Engineer concurrently. The CEI firm shall maintain an updated set of Erosion Control Plans in accordance with NCDOT policy and an updated set of seeding "red-lined" As-Built plans. The CEI firm shall be responsible for measuring the areas of proposed seeding and topdressing operations prior to performance of the work to ensure compliance with the applicable seed, lime, and/or fertilizer rates. Such areas and rates shall be documented in the daily reports. Copies of the 401 and 404 permits and the updated Erosion Control Plans shall be maintained on site at all times.

The NCTA recognizes the imperative need to have qualified individuals designing, constructing, maintaining, and performing oversight of erosion and sediment control/stormwater components within all transportation facility projects. This accountability and competence is required to ensure that the environmental commitments into which the NCTA has entered and within the NCDOT delegated Sediment and Erosion Control Program are upheld. The CEI firm shall have a dedicated erosion control Certified Supervisor as defined in the Project Special Provision for Erosion & Sediment Control/Stormwater Certification who is knowledgeable of current North Carolina Sediment and Erosion Control Laws and vegetation establishment and maintenance techniques. In addition, the CEI firm has a direct responsibility to ensure the Design-Build Team does not receive any Immediate Corrective Actions (ICA), Continuances of Immediate Correction Action (CICA), Notices of Violation (NOV), and/or Cease and Desist (C&D) orders at any time during the project. Consistent with the Erosion Control Scope of Work, damages in the amount of $5,000 per violation shall be deducted from the lump sum amount directed to the CEI Firm for each NOV, C&D order, CICA or ICA.

The Design-Build Team shall observe and comply with Federal and State Laws, Local Laws, Ordinances, and Regulations; as well as Orders and Decrees of Bodies having any jurisdiction or authority in accordance with Section 107 of the 2012 *Standard Specifications for Roads and Structures*.

FHWA reserves the right to inspect any and all processes and procedures at any time and municipalities have the right to inspect their work which has been included within the project, such as utilities.

NCDOT reserves the right to inspect any and all sampling and testing processes and procedures at any time.

(C) Certifications

The CEI firm shall maintain all material certifications in accordance with Article 106-3 of the 2012 *Standard Specifications for Roads and Structures*. These records shall be included with the materials received reports and retained in Constructware.

The Design-Build Team shall, upon completion of the project, certify that all material certifications have been received and the materials used in the work were found in compliance with the specification requirements. Any exceptions to the plans and specifications shall have been clearly brought to the attention of the Engineer and properly addressed. All source documents used in the certification of materials shall be retained for a period of three years after payment is made by FHWA of the final voucher. These records shall be made available for inspection by Materials and Tests Unit personnel upon request.

The final certification of the project shall be in the following format:

> *"This is to certify that the results of the Quality Control samples indicate that the materials incorporated in the construction work and the construction operations controlled by sampling and testing, were in conformity with the approved plans and*

specifications. Such results compare favorably with the results of the Verification sampling and testing. Exceptions to the plans and specifications are noted below:"

(D) Miscellaneous Provisions

The CEI firm shall prepare all documentation necessary to meet all certification requirements in the permits.

The contract between the Design-Build Team and the private engineering firm performing the Construction Engineering and Inspection shall in no way preclude the private engineering firm from suspending work on the project if and when necessary.

The control and supervision of all phases of the Scope of Work performed by the CEI firm shall be under the direction of a project manager who is a Professional Engineer, licensed in North Carolina. The CEI firm shall provide a staff of competent, qualified engineers and technicians, adequate in number and experience to perform the described this Scope of Work.

The CEI firm shall maintain all books, documents, papers, accounting records, and other information pertaining to costs incurred on this project and make such materials available for inspection at its offices at all reasonable times during the contract period and for three years from the date of final voucher, by any authorized representative of NCDOT, and the Federal Highway Administration. Copies thereof shall be furnished to the NCTA, NCDOT, and Federal Highway Administration if requested.

Employees of the CEI firm or employees of any subconsultant for the CEI firm to provide inspection or lab services for this project shall comply with the NCTA and NCDOT ethics policies. Failure to comply with the ethics policies will result in the employee's removal from the project and may result in the firm being removed from the NCDOT's list of prequalified Engineering Firms for Construction Engineering and Inspection.

The Engineer shall have the right to approve or reject any personnel assigned to a project by the CEI firm.

(E) Compensation

No direct compensation will be made for the work of "Construction Engineering and Inspection". Compensation is included in the lump sum price bid for the entire project. No separate payment will be made for vehicles, office space, inspection or testing equipment, materials, training requirements, surveying equipment, or any other incidentals as may be necessary to accomplish this work. The Design-Build Team shall compensate the CEI firm for services provided by the CEI firm on a lump sum basis. Compensation shall not be made on any type of unit price basis. The CEI firm is not allowed to provide an hourly quote for services to the Design-Build Team. The CEI quote for services to the Design-Build Team must be in the form of a lump sum quote.

(F) Other

Quality Management System (QMS) for Asphalt Pavements: The Design-Build Team or Asphalt Producer shall perform all quality control sampling and testing for the asphalt mixtures and asphalt pavement density in accordance with Section 609 of the 2012 *Standard Specifications for Roads and Structures*. The NCDOT and NCTA will perform all quality assurance, verification and independent assurance sampling and testing for the asphalt mixtures and asphalt pavement density necessary for this project in accordance with NCDOT specifications, policies and procedures.

Materials sampling, testing, or approval required for in state or out of state precast concrete, steel manufacturing, high mast light poles, overhead sign assemblies, toll gantries and other fabricating facilities where the NCDOT Materials and Tests Unit routinely performs these functions will continue to be performed by NCDOT.

The CEI firm is responsible for maintaining coordinately correct as-built plans during the construction and delivering both hard copy and electronic final set of coordinately correct as-built plans to the Engineer upon completion of the project. These as-built plans will be used to review the final acceptance of the project.

The CEI firm shall provide as built drawings per the Utility Construction Scope of Work prior to acceptance of the utility work. In order to accurately reflect municipal reimbursements for utility work, the CEI firm shall provide NCTA final quantities for all water and sewer relocation work, in accordance with pay items located within Division 15 of the 2012 *Standard Specifications for Roadways and Structures*. The CEI firm shall certify utility relocation as-constructed plans as required by the municipalities. The CEI firm shall maintain a separate daily report detailing specifics regarding all utility relocations, including items of work and quantities.

The CEI firm shall also prepare the final estimate in accordance with NCDOT policy for submittal to the Engineer at the conclusion of the project.

(G) Verification of Pay Application

The CEI Firm shall complete a payment certification for each pay application submission to the Engineer. As a component of this payment certification, the CEI firm will certify that all the materials incorporated into the project and proposed for payment, for the payment period, have been tested in accordance with all contract requirements and have met the respective contract requirements. Any materials and/or products not meeting the requirements of the contract will be noted in the pay application. The CEI firm shall also reference the cost loaded CPM to certify that the pay application amount requested (invoice) is consistent with the work performed for the period covered by the pay application.

UTILITY CONSTRUCTION SCOPE OF WORK (11-07-11)

ACRONYMS

NCAC	North Carolina Administrative Code
NCDENR	North Carolina Department of Environment & Natural Resources
NCDWQ	North Carolina Department of Water Quality
DEH	Division of Environmental Health
PWSS	Public Water Supply Section
NSF	National Sanitation Foundation

GENERAL

The design and construction of any utilities not specifically mentioned in this Scope of Work shall be handled and paid for in accordance with the Utilities Coordination Scope of Work.

The NCTA is entering into agreements with the utility owners of water and sewer utility facilities described below and the preparation of these agreements is not the responsibility of the Design-Build Team. Upon final design approval, the Design-Build Team shall provide five (5) sets of 11" x 17" plans for each of the utility owner's facilities to the NCTA for addendum to the NCTA / Utility Owner agreement. Concurrently with this submittal, the Design-Build Team shall submit one (1) set of 11" x 17" plans for each of the utility owner's facilities to the Transportation Program Management Unit, and one (1) set of 11" x 17" plans to the NCDOT State Utility Agent.

Unless noted otherwise elsewhere in this RFP, the Design-Build Team is not responsible for acquiring public utility easements or the cost of same.

The utility owners and their facilities in conflict with this project are as follows:

- **City of Gastonia** – Betterment Requests only
- **City of Belmont** - Water Line and Sanitary Force Main Sewer
- **Charlotte-Mecklenburg Utilities** – Water Line

AS-BUILTS

The Design-Build Team shall develop and provide As-Built Drawings in accordance with NCDOT MicroStation guidelines, which are coordinately correct, horizontal and vertical, and tied to the state coordinate system. As-Built Drawings shall be provided for all utility facilities designed and constructed as part of this Scope of Work. In addition, the following As-Built information shall be provided to the NCTA and the municipalities:

- **City of Gastonia**

  Submit one (1) hard copy set on 0.3mm Mylar sheets (size D 24" x 36") that is dated, signed & sealed, and clearly marked AS-BUILT. Submit Engineer's Certification that is dated and signed & sealed along with the Mylar As-Built drawings. Submit one (1) digital copy of the As-Builts in AutoCAD 2004 version, or newer.

- **City of Belmont**

  Submit one (1) hard copy set on 0.3mm Mylar sheets (size D 24" x 36") that is dated, signed & sealed, and clearly marked AS-BUILT. Submit Engineer's Certification that is dated and signed & sealed along with the Mylar As-Built drawings. Submit one (1) digital copy of the As-Builts in AutoCAD 2004 version, or newer.

- **Charlotte - Mecklenburg Utilities**

  Submit one (1) hard copy set on 0.3mm Mylar sheets (size D 24" x 36") that is dated, signed & sealed, and clearly marked AS-BUILT. Submit one (1) digital copy of the As-Builts in AutoCAD 2004 version, or newer.

DESIGN PROCESS

The Design-Build Team shall design, permit, furnish, install, inspect and coordinate the certification of Water Line, Sanitary Gravity Sewer, and Sanitary Force Main Sewer utility facilities in accordance with the more stringent requirement of the following project documents: Division 15 of the 2012 *Standard Specifications for Roads and Structures*; 2012 *NCDOT Roadway Standard Drawings*; NCDOT Policy And Procedures For Accommodating Utilities on Highway Rights Of Way; Utility Construction Criteria for the Garden Parkway dated October 1, 2011; Administrative Code Section 15A NCAC 2T – Waste Not Discharged To Surface Waters; NCDENR – "Minimum Design Criteria For The Permitting of Gravity Sewers"; and the appropriate sections of NCDENR-DEH-PWSS – "Rules Governing Public Water Supplies". It shall be the responsibility of the Design-Build Team to identify all conflicts, obtain all municipality and environmental agency approval, and develop final construction documents accordingly.

Relocation and construction of all water and sewer, including but not limited to: valves; fire hydrants; vaults; fire department connections; manholes; meters; and service lines, that are impacted by the Design-Build Team's design and construction shall be the responsibility of the Design-Build Team, regardless of whether or not the conflict is specifically mentioned in this Scope of Work or shown in the Preliminary Routing Plans provided. All costs for design, materials, permits and fees, installation, testing and relocation shall be the responsibility of the Design-Build Team and shall be included in their lump sum bid for the project.

The Utility Construction Preliminary Routing Plans dated October 1, 2011 are provided for general information only and are considered PRELIMINARY as the relocation designs are based on Preliminary (30%) Roadway Design Plans, cross sections, and profiles. These Preliminary Routing Plans should NOT be construed as final engineered design plans or as representing all possible conflicts.

The Design-Build Team shall coordinate all installations, connections and interruption of service with the appropriate utility owner.

The Design-Build Team shall coordinate and obtain approvals of the Utility Construction design and construction with the utility owner, the NCTA and the NCDOT. The Design-Build Team shall submit two (2) full size (22" x 34") copies of the Utility Construction plans to the NCDOT Director of Transportation Program Management for review and acceptance. The Design-Build

Team shall provide the utility companies the appropriate number of copies for their review and approval. The Design-Build Team shall allow 20 business days for review of each plan submittal, which shall also be reflected in the project CPM Schedule.

The Design-Build Team shall be responsible for making application and permitting both water and sewer utilities with the utility owner and NCDENR to include any application or permitting fees. The Design Build Team shall adhere to all NCDENR requirements and shall be responsible for all NCDENR coordination and approvals associated with the facilities. Upon permit approval of the Utility Construction design plans, the Design-Build Team shall provide each utility owner with two (2) sets of full size (22" x 34") plans and a copy of the approved permit.

DESIGN NOTES

A. General

The existing utility facilities are to remain in place and fully functioning until new or temporary facilities are certified and accepted as complete by the appropriate utility owner. There shall not be interruption of utility service, unless specifically stated for that conflict herein. Maintain service to all fire hydrants until relocated. Immediately repair and re-establish service line damage resulting from construction activities.

All utilities shall be designed to facilitate future maintenance with equipment readily available to the municipality. At locations where utilities are installed under bridges, a minimum clearance of 20 feet shall be maintained or the Design-Build Team shall include a mechanism or measures to facilitate future maintenance, such as encasing the pipe throughout the limits of the overhead obstruction.

Existing facilities to be placed out of service shall be removed or grouted in accordance with Article 1000-6 of the 2012 *Standard Specifications for Roadways and Structures*. The Design-Build Team shall properly remove and dispose of any matter within the utility, in accordance with local, State and Federal requirements.

Removal of asbestos cement pipe shall be in full pipe sections or broken into pieces. Under no circumstances shall the asbestos cement pipe be saw cut or ground into friable pieces. All broken materials shall be placed in a plastic bag and transported to the nearest landfill for proper disposal. Sections of asbestos cement pipe can be abandoned in place where located in non-traffic bearing areas and areas not to be disturbed by construction.

When connecting to asbestos cement pipe, the Contractor shall remove the entire 13 foot joint, from bell to spigot (plain end). The bell on the adjoining asbestos cement pipe shall be removed to create a spigot end, thus making a spigot connection on each end of the pipe removed. Connection to the asbestos cement pipe will be accomplished using a One Bolt HyMax, or similar, coupling, which shall require removal of the inner gasket of the new pipe to match the outside diameter of the asbestos cement pipe.

The Design Plans and As-Built Plans shall depict all Tax Parcel ID Numbers and Property Owners for all surrounding properties.

The Design-Build Teams shall locate and verify the exact location, material, size, and condition of all existing water and sewer facilities.

Unless noted otherwise, the Design-Build Team shall locate the new utility facilities as far from the roadway as possible while remaining within the NCDOT right-of-way. Except for crossings and transitions from existing lines, utility lines shall be beyond a 1V:1H distance and a minimum of five feet from edge of pavement. The location of new utilities shall allow for access and future maintenance.

Maintain adequate separation between storm sewers, sanitary sewers, duct banks and potable water mains as per utility owner standards.

All materials shall be new, including fire hydrants. Water mains and appurtenances shall be NSF approved.

All fire hydrants removed during construction shall be provided to the appropriate municipality in like condition to that it was found.

Prior to placing any fire hydrants out of service, notify the municipality Fire Department with jurisdiction within such area.

All steel encasement pipes shall be sealed on each end, delineated and be located such that the utility owner may install the future utility pipe at a later date (which may be prior to completion of the project) by means of open cut without hindrances such as pavement, guardrail, utilities, landscaping, drainage structures, signage, lighting, etc.

For all steel encasement pipes installed for future utilities, obtain and use elevations and inverts from the utility owner requesting the betterment.

All pipe joints that require restraint per the Utility Construction Criteria dated October 1, 2011 or the 2012 *Standard Specifications for Roads and Structures* shall be mechanically restrained.

B. City of Gastonia Requirements

All proposed water and sewer design and construction shall be in accordance with the City of Gastonia's specifications and standard details as set forth in the Utility Construction Criteria for the Garden Parkway, dated October 1, 2011.

C. City of Belmont Requirements

All proposed water and sewer design and construction shall be in accordance with the City of Belmont's specifications as set forth in the Utility Construction Criteria for the Garden Parkway, dated October 1, 2011.

The City of Belmont's utilities will require permitting through NCDENR and NCDWQ. This process will entail a satisfactory review by the City of Belmont and a subsequent submission of a permit application to the appropriate regulatory agency. Final water and sewer facilities

plans and specifications are required and must be submitted to the City of Belmont for review and approval before permit applications are signed by the City. The City of Belmont may charge a review fee consistent with review fees normally charged for engineering reviews. The review fees will be the responsibility of the Design-Build Team.

The City of Belmont will provide their own inspection services for the construction of their water and sewer facilities. City inspection fees will apply and will be the responsibility of the Design-Build Team.

Water main and force main testing shall meet the requirements as set forth in the City of Belmont's specifications in the Utility Construction Criteria for the Garden Parkway, dated October 1, 2011.

1. Water Main

All proposed fire hydrants shall be new and the existing fire hydrants that are to be removed shall be delivered to the City of Belmont Public Works garage.

Per City of Belmont's specifications, water main shall be cement lined ductile iron pipe, pressure class 350. Push on joints or mechanical joints are permissible except that mechanically restrained joints are required at all fittings, in casing pipes, and on steep slopes (3:1 or greater). Minimum depth of bury shall be 36 inches.

The existing water main must be kept in service until the new pipe is installed, tested, and final approval from PWSS is received. This will require pressure taps at either end of the new pipe and insertion valves on the abandoned pipe side of the pressure connections. Appropriate fittings and service taps must be provided for pressure testing and disinfection of the new main. Only City of Belmont personnel may operate water system valves.

Gate valves with cast iron valve boxes must be provided on either side of the Garden Parkway (top of bank) and at intervals not to exceed 1,500 feet along the remainder of the new water main. Valves and valve boxes shall conform to the requirements as set forth in the City of Belmont's specifications in the Utility Construction Criteria for the Garden Parkway, dated October 1, 2011.

Any existing water services to private property must be replaced as required to maintain service to said property.

Water for use in constructing the Garden Parkway project is available from the City of Belmont under certain conditions. The Contractor must install a metered service connection with a City approved backflow device. Use of water may be restricted to off peak hours and all water must be paid for at the construction water rate established by City Council and as revised annually. If the Contractor desires a temporary construction water service, it must be shown on the plans.

2. Sewer Force Main

It is possible that the proposed vertical and horizontal alignment of the force main may affect the pumping capacity of the two existing pump stations tied to the force main. The Design-Build Team must provide an analysis demonstrating that the proposed alignment will not increase head conditions for the pump stations.

Force main material shall be ductile iron pipe, pressure class 350 with the pipe and fittings having ceramic epoxy interior coating such as Protecto 401, or approved equal.

Restrained joints are required at all fittings, in casing pipes, and on steep slopes (3:1 or greater).

All force main must be clearly identified with green plastic locator tape, buried above the pipe per the City of Belmont's specifications in the Utility Construction Criteria for the Garden Parkway, dated October 1, 2011.

Air release valves are required at high points.

The existing force main must be kept in service until the new pipe is installed, tested, and final approval from DWQ is received. This will require pressure taps at either end of the new pipe and insertion valves on the abandoned pipe side of the pressure connections. Appropriate fittings and service taps must be provided for pressure testing and disinfection of the new main.

D. Charlotte-Mecklenburg Utilities Requirements

All proposed water and sewer design and construction shall be in accordance with the Charlotte-Mecklenburg Utilities specifications and standard details as set forth in the Utility Construction Criteria for the Garden Parkway, dated October 1, 2011.

UTILITY CONFLICTS & BETTERMENT REQUESTS (BY OWNER)

The following conflict descriptions coincide with the Preliminary Routing Plans, dated October 1, 2011 and are based upon the Functional Design. These conflicts may increase, decrease, be eliminated and/or other conflicts, not identified herein, created based upon the Design-Build Team's plan. The conflict information contained below was established in coordination with the municipalities and shall not supersede the Design-Build Teams responsibility to design, coordinate, permit and construct all water and sewer utilities impacted by the project.

A. Utility Owner - City Of Gastonia

CONTACT: Mr. Mike Bynum @ 704-866-6043
E-MAIL: mikeb@cityofgastonia.com

CONTACT: Mr. Tucker Johnson @ 704-869-1002
E-MAIL: tuckerj@cityofgastonia.com

ADDRESS: 1300 North Broad Street, Gastonia, NC 28054

1. General Notes

Any water and sewer shown on the Utility Construction Preliminary Routing Plans that has not been identified as a conflict does not appear to be in conflict with the current proposed roadway construction. Therefore, no action is needed unless otherwise impacted by the Design-Build Team's final design or construction methods.

Existing water and sewer information shown on plans is based on Quality Level D SUE, As-Builts, and input from utility owners.

The contractor shall be responsible for verifying all locations, sizes and types of materials on all existing water and sewer facilities.

Prior to any water and sewer relocation and/or abandonment, the contractor shall coordinate any disruption in water and/or sewer service with the appropriate municipality or agency.

All existing sewer services shall be abandoned where existing sewer mains are to be abandoned.

A 100-ft non-contamination radius is required around each well per NCDENR.

All encasements for future sewer shall be 2 feet below creek elevation and shall maintain the same slope as the creek. Minimum slope is 0.60%.

2. Betterment Request

The City of Gastonia is requesting that a 30" encasement pipe be installed under the proposed Garden Parkway to accommodate future sanitary sewer build out of their system. The City of Gastonia shall provide elevation grades for the encasement pipe at a later date during design.

Betterment Request #19 – Refer to the Utility Construction Preliminary Routing Plans, Sheet UC-43.

Betterment Request #20 – Refer to the Utility Construction Preliminary Routing Plans, Sheet UC-47.

Betterment Request #21 – Refer to the Utility Construction Preliminary Routing Plans, Sheet UC-52.

Betterment Request #22 – Refer to the Utility Construction Preliminary Routing Plans, Sheet UC-56.

Betterment Request #23 – Refer to the Utility Construction Preliminary Routing Plans, Sheet UC-56.

Betterment Request #24 – Refer to the Utility Construction Preliminary Routing Plans, Sheet UC-59.

B. Utility Owner - City Of Belmont

CONTACT: Mr. Jerry Hatton @ 704-577-7505
E-MAIL: jhatton@cityofbelmont.org

ADDRESS: 115 North Main Street, Belmont, NC 28012

1. General Notes

Any water and sewer shown on the Utility Construction Preliminary Routing Plans that has not been identified as a conflict, does not appear to be in conflict with the current proposed roadway construction. Therefore, no action is needed unless otherwise impacted by the Design-Build Team's final design or construction methods.

Existing water and sewer information shown on plans is based on Quality Level D SUE, As-Builts, and input from utility owners.

The contractor shall be responsible for verifying all locations, sizes and types of materials on all existing water and sewer facilities.

Prior to any water and sewer relocation and/or abandonment, the contractor shall coordinate any disruption in water and/or sewer service with the appropriate municipality or agency.

All existing sewer services shall be abandoned where existing sewer mains are to be abandoned.

A 100-ft non-contamination radius is required around each well per NCDENR.

2. Water Line

Conflict #34 – Refer to the Utility Construction Preliminary Routing Plans, Sheets UC-68, UC-134, UC-136 and UC-137. The Design-Build Team shall abandon approx. 4,207 linear feet of existing 12" water main, relocate 4 fire hydrants and remove 5 fire hydrants along Southpoint Rd. Install approximately 183 linear feet of 20" encasement pipe and approximately 4,297 linear feet of proposed 12" water main. Install two 12" valves and two 1" air release valves.

3. Sanitary Force Main

Conflict #35 – Refer to the Utility Construction Preliminary Routing Plans, Sheets UC-68, UC-134 and UC-136. The Design-Build Team shall abandon approximately 2,834 linear feet of existing 8" force main sewer beginning south of Tucker Rd. on Southpoint

Rd. Install approximately 182 linear feet of 18" encasement pipe and approximately 2,839 linear feet of proposed 8" force main sewer.

4. Betterment Request

Betterment Request #25 – Refer to the Utility Construction Preliminary Routing Plans U-3321, Sheet UC-66. The City of Belmont is requesting to have a 24" encasement pipe be installed under the proposed Garden Parkway to accommodate future water build out of their system. The City of Belmont shall provide elevation grades for the encasement pipe at a later date during design.

C. Utility Owner - Charlotte-Mecklenburg Utilities

CONTACT: Mr. William "Bill" Deal @ 704-391-5150
E-MAIL: wdeal@ci.charlotte.nc.us

ADDRESS: 5100 Brookshire Boulevard, Charlotte, NC 28216

1. General Notes

Any water and sewer shown on the Utility Construction Preliminary Routing Plans that has not been identified as a conflict, does not appear to be in conflict with the current proposed roadway construction. Therefore, no action is needed unless otherwise impacted by the Design-Build Team's final design or construction methods.

Existing water and sewer information shown on plans is based on Quality Level D SUE, As-Builts, and input from utility owners.

The contractor shall be responsible for verifying all locations, sizes and types of materials on all existing water and sewer facilities.

Prior to any water and sewer relocation and/or abandonment, the contractor shall coordinate any disruption in water and/or sewer service with the appropriate municipality or agency.

All existing sewer services shall be abandoned where existing sewer mains are to be abandoned.

A 100-ft non-contamination radius is required around each well per NCDENR.

2. Water Line

Conflict #42 – Refer to the Utility Construction Preliminary Routing Plans, Sheets UC-80 and UC-149. The Design-Build Team shall abandon approximately 2,554 linear feet of existing 16" ductile iron water main along Garrison Rd. and under I-485. Install approximately 3,261 linear feet of proposed 16" water main with 312 linear feet of 24" encasement pipe under I-485. Install approximately 229 linear feet of 24" encasement pipe under proposed Garden Parkway. Install five 16" valves. (PUE is anticipated for this relocation.)

AESTHETIC DESIGN SCOPE OF WORK (11-07-11)

General

The aesthetic design and construction of the project shall include aesthetic treatments to roadway, bridge and other elements in a cost and maintenance conscious manner. Special hardscape shall be designed to lend a look and feel to the roadway corridor that is reminiscent of the Garden Parkway region's context.

The Garden Parkway Aesthetic Inspiration, dated September 1, 2011, (hereinafter referred to as "Inspiration"), portrays the historical, architectural and cultural characteristics of the Project region. The Inspiration showcases the rich history of the corridor region, which was initially inhabited by Native Americans due to its fertile soils and access to waterways. As settlers moved inland, this region was molded first by agriculture and then the railroad and textile industries during the industrial revolution. More recent features of significance include Memorial Hospital and Belmont Abbey College. An architectural review committee of community representatives was consulted to assure that the inspiration and character depicted is appropriate for the context in which the Garden Parkway will be located.

The Design-Build Team shall utilize the Inspiration to design the aesthetic treatments of the bridges, roadway, and other elements as outlined herein. The Inspiration shall serve as the basis for retaining aesthetic uniformity throughout the Garden Parkway. The Design-Build Team shall utilize the Inspiration in developing the aesthetic treatments, materials, or construction techniques while preserving the general character.

Consistent application of the design motif throughout all of the tolling areas, bridge abutments and bents, overhead sign structures, ITS components and other roadway elements is essential to the success of the design. The NCTA priorities for aesthetics in order from top priority to lowest priority are as follows:

1) Aesthetic treatment to bridges
2) Aesthetic treatment to toll gantries and toll equipment buildings
3) Aesthetic treatment to retaining walls and sound walls
4) Aesthetic treatment to overhead signs, DMS signs, and ITS devices
5) Voluntary aesthetic treatments

The Design-Build team should design for approximately two percent of the total construction cost allocated to the Aesthetic Treatments. The Design-Build Team's aesthetic concepts shall be reviewed and approved by the NCTA prior to the submission of the Technical and Price Proposals and will be part of the technical scoring evaluation, including any voluntary aesthetic treatments.

As a minimum the aesthetic treatments shall be accomplished through the use of concrete cast in place or precast form liners and stained appropriately where applicable. In addition, all stained concrete surfaces shall contain an anti-graffiti coating.

Bridge Aesthetics

Bridges shall have aesthetic treatments applied to locations visible to motorist regardless if the traffic is on the Garden Parkway or -Y- Lines. At minimum, aesthetic treatments should be installed on the abutment walls, interior bents, columns, caps, coping, and exterior girders. Streets names shall be embossed on the abutment copings at all cross streets, including the Garden Parkway crossing -Y-lines. All bridge barrier rails shall contain grooves / indentations and concrete staining to enhance the regional architectural theme.

As boating traffic is prevalent in the Catawba River and South Fork Catawba River, aesthetic treatments shall be applied to the structures over these rivers to enhance the visual appearance. The aesthetic treatments for these specific water crossings may be limited when compared with the roadway structures; however, they should be bold enough to make an impression of the water crossing structural significance. Aesthetic treatments are not required for water crossings, greenway and railroad structures that cannot be seen by motorist, excluding the two water crossings previously mentioned.

The appearance / mass of the bridge aesthetics shall remain in scale with the size of the bridge.

Bridge barrier rails shall meet all applicable AASHTO standards and NCHRP 350 testing requirements. If metal rail is utilized to meet pedestrian and bicycle height requirements, it shall be treated to blend with the regional architectural theme.

Tolling Gantry

The gantry structures shall have aesthetic treatments applied to all upright elements and the gantry horizontal truss assembly.

Tolling Gantry Truss System

The truss system shall be designed so all toll collection equipment is screened from the view of traffic. Design and construct gantry structure including scale, materials, color and finish aesthetically consistent with the regional architectural theme. The façade or paneling of the gantry shall conceal the truss system, all AET tolling equipment and cabling from traffic. The gantry aesthetics should present a straight and clean visual appearance, which is not detracted from by tolling equipment. The interior side of each gantry truss will not have the screening product thereby allowing and not interfering with operation or maintenance of the toll collection equipment.

Toll Equipment Building / Vault

The toll equipment buildings shall be designed to complement the regional architecture theme with appropriate roofing design and materials. The building design shall provide a complementary screen wall to enclose the area indicated within the AET Standards for the generator, A/C, fuel tank, electrical panels, etc.

The designer shall propose a toll building design and location that does not interfere with installation and maintenance of tolling equipment that is complementary to the design of the

gantries, that is not visually obtrusive in scale and that accommodates future landscape development.

Where tolling equipment (electrical panels, data collection enclosures, etc.) is not housed in a building, it shall be placed to minimize visual impact and so it can be screened from view with future landscaping.

Sound and Retaining Walls

Sound and retaining walls shall be detailed and constructed to provide for an attractive and fluid elevation along the top of the wall. Sound and retaining walls shall contain aesthetic treatments to the walls, pilasters, pilaster caps and shall include coping along the top of the wall. The backside of concrete sound walls shall contain a broom finish texture with approved concrete stain. The sound walls shall have decorative pilasters on the roadway side of the sound wall and at the terminus of each sound wall section. At locations where single face concrete barrier rail is placed in front of the wall, the aesthetic treatment shall accommodate the barrier rail.

Signs

Overhead and cantilever signs shall have aesthetic treatments to the uprights and bases that are consistent with the regional architectural theme. Treatments shall not affect future inspections to include the mounting bolts.

Submittal of Aesthetics Details Package (Pre-Bid)

The Proposer shall submit a package (five copies) that conveys their approach to aesthetics and satisfies the requirements herein. The Proposer is cautioned that the aesthetics details required herein must be pre-approved in writing by the NCTA within the timeline specified in the Procurement Timeline or the Technical Proposal may be deemed non-responsive. The Proposer must also include, at a minimum, the pre-approved aesthetics details package in the Technical Proposal.

The Proposer shall also address the attributes of their approach to aesthetics in their Oral Presentation with the Technical Review Committee.

Preliminary Design

After contract award, the Design-Build Team shall clearly present, with appropriate visual aids, the design intent, their aesthetic theme, general plan, and preliminary details for each design element. The Design-Build Team shall allow 30 days for review of the aesthetic details.

Final Design

The Design-Build Team shall include the accepted aesthetics details with the appropriate submittal of preliminary and final designs plans for each element (bridge, roadway, sign structure, gantry, etc.).

The Design-Build Team shall develop and submit for review any specifications, material requirements or construction processes needed to accomplish the aesthetic work along with the final design submittal for each element.

Voluntary Aesthetic Treatments

The Design-Build Team may elect to include other Voluntary Aesthetic Treatments in their Technical Proposal and / or design, such as the following, that will increase the quality of the visual appearance.

- Ornamental lighting at / or across bridges
- Metallization or powder coating of sign supports
- Aesthetic treatments in roundabouts
- Public Art per the NCDOT policy for inclusion within the right of way

Materials, Construction, and Fabrication

The Design-Build Team shall demonstrate the long-term durability of any color application (staining, anodizing, painting, etc.) on any feature proposed. Provide a minimum of three test panels, produced in different batches, of each product to demonstrate the consistency of color.

Proposers shall demonstrate in their aesthetic details package how joints will be eliminated or otherwise masked from affecting the overall appearance and continuity of the walls, piers, pylons and / or arches.

Three full size mockup panels will be required for each type of colored element on the project. At their own risk, the Design-Build Team may elect to use production elements as the test panels.

Concrete girders are preferred. Weathering steel girders are allowed provided consistency with the regional architectural theme is retained and measures are designed and installed to prevent staining of other bridge components. If painting of steel girders is necessary to obtain consistency with the regional architectural theme, it shall be performed in accordance with Section 442 of the 2012 *Standard Specifications for Roads and Structures* using System 1, except the topcoat shall be consistent with the aesthetic details.

Precast members may be used for structural supports or to hide structural members.

PUBLIC INFORMATION SCOPE OF WORK (11-07-11)

The Design-Build Team will take the lead role and be responsible for the public information efforts through the Engineer's designee. The Design-Build Team shall employ a person experienced in development and distribution of public information to lead the public information efforts. The lead person shall be identified in the Technical Proposal and shall be approved by the Engineer. The Design-Build Team's responsibilities will include:

- Organizing and participating in public meetings
- Providing media announcements
- Developing and producing informational print materials
- Developing and maintaining a comprehensive project website to include, at minimum, the following: project overview with maps; weekly construction updates; project schedule with visual weekly updates; contact information and informational materials for property acquisitions; informational materials on noise barriers, noise barrier policy and noise reports; construction noise reduction measures; road closures and detours; news releases, articles and printed stories about the project; mailings distribution sign-up (email group); project Twitter account (through NCDOT's main Twitter account) linked to website with the potential for daily updates during major activities; project related posts provided to Social Media Coordinator to be used on NCDOT Facebook page; and other materials as deemed appropriate to inform the public about the project. A social media plan must be submitted and approved prior to NCDOT setting up a Twitter account for the project. The website shall be housed on a non NCDOT server. The Design-Build Team shall submit the initial general content of the website to NCTA for review and approval.
- Providing advance notice to the Engineer and the NCDOT Division 10 and 12 Engineers of upcoming project impacts
- Attending and / or speaking at public meetings
- Facilitate Pubic Information / Operations Meetings that will be held periodically during construction

The Engineer shall approve the public information materials created by the Design-Build Team for distribution. The NCTA will be responsible for identifying the target audiences and will also be responsible for the cost of any postage necessary for these mailings.

The Design-Build Team shall coordinate with the Engineer to promote public awareness for this project. Prior to beginning construction, the Design-Build Team shall develop a comprehensive Public Information Plan for the project. This plan shall detail target audiences, project impacts and proposed efforts to notify the public about the impacts. The plan shall outline expected major project impacts and methods to ensure adequate public awareness of these impacts.

As part of this Public Information Plan, the Design-Build Team will develop the specific list of target audiences for this project. The following groups are identified as typical target audiences to receive informational materials:

- Governmental agencies
- Municipalities directly affected by construction

- Transportation services
- Emergency services
- Neighborhood groups and private homes
- Industry and businesses
- Chambers of Commerce
- Individual schools affected by the project
- County / City school systems
- Any other organization as deemed necessary by the Engineer

Additionally, the Public Information Plan will include:

- The proposed method of providing appropriate advance notice to the Engineer
- The organization of the website
- Recommended strategies for ensuring a proactive approach to public awareness
- Recommended strategies for ensuring coordination between any construction and/or public awareness efforts on adjacent projects
- Crisis Communication Plan to detail mechanisms for responding to any major incident that could adversely impact stakeholders or the project

The Design-Build Team shall hold an initial project coordination meeting with the Engineer one month prior to start of construction to discuss project impacts to the public and the Public Information Plan.

The Design-Build Team shall inform the Engineer at least three (3) weeks in advance of any construction activity that will have significant impact on the public, including the start of construction, major traffic shifts, road closures, ramp closures, detours, night work and project completion. In the event that the Design-Build Team informs the Engineer of a construction activity that significantly impacts the public less than three weeks in advance, the Design-Build Team shall hand deliver informational materials to the target audiences.

The amount of public involvement required for this project is directly related to the Design-Build Team's Traffic Control Plan and construction details. As a minimum, the Design-Build Team shall be responsible for the following involvement:

- Public Meetings – Organizing "beginning of construction" meeting(s) which shall be held for area businesses and residents.

Distribution of Informational Materials - For the "beginning of construction" meetings and for all major traffic impacts and / or road / ramp closures with detour routes, the Design-Build Team shall be responsible for delivering time sensitive informational material directly to portions of the target audience.

*** STANDARD SPECIAL PROVISIONS ***

LOCATING EXISTING UNDERGROUND UTILITIES:

(01-23-12) 105 DB1 G115

Revise the *2012 Standard Specifications* as follows:

Page 1-43, Article 105-8, line 28, after the first sentence, add the following:

Identify excavation locations by means of pre-marking with white paint, flags, or stakes or provide a specific written description of the location in the locate request.

PLANT AND PEST QUARANTINES

(Imported Fire Ant, Gypsy Moth, Witchweed, And Other Noxious Weeds)

(3-18-03) DB1 G130

Within Quarantined Area

This project may be within a county regulated for plant and/or pests. If the project or any part of the Design Build Team's operations is located within a quarantined area, thoroughly clean all equipment prior to moving out of the quarantined area. Comply with federal/state regulations by obtaining a certificate or limited permit for any regulated article moving from the quarantined area.

Originating in a Quarantined County

Obtain a certificate or limited permit issued by the N.C. Department of Agriculture/United States Department of Agriculture. Have the certificate or limited permit accompany the article when it arrives at the project site.

Contact

Contact the N.C. Department of Agriculture/United States Department of Agriculture at 1-800-206-9333, 919-733-6932, or **http://www.ncagr.com/plantind/** to determine those specific project sites located in the quarantined area or for any regulated article used on this project originating in a quarantined county.

Regulated Articles Include

1. Soil, sand, gravel, compost, peat, humus, muck, and decomposed manure, separately or with other articles. This includes movement of articles listed above that may be associated with cut/waste, ditch pulling, and shoulder cutting.
2. Plants with roots including grass sod.
3. Plant crowns and roots.
4. Bulbs, corms, rhizomes, and tubers of ornamental plants.
5. Hay, straw, fodder, and plant litter of any kind.
6. Clearing and grubbing debris.
7. Used agricultural cultivating and harvesting equipment.
8. Used earth-moving equipment.

9. Any other products, articles, or means of conveyance, of any character, if determined by an inspector to present a hazard of spreading imported fire ant, gypsy moth, witchweed or other noxious weeds.

GIFTS FROM VENDORS AND CONTRACTORS

(12-15-09) DB1 G152

By Executive Order 24, issued by Governor Perdue, and *N.C. G.S.§ 133-32,* it is unlawful for any vendor or contractor (i.e. architect, bidder, contractor, construction manager, design professional, engineer, landlord, offeror, seller, subcontractor, supplier, or vendor), to make gifts or to give favors to any State employee of the Governor's Cabinet Agencies (i.e. Administration, Commerce, Correction, Crime Control and Public Safety, Cultural Resources, Environment and Natural Resources, Health and Human Services, Juvenile Justice and Delinquency Prevention, Revenue, Transportation, and the Office of the Governor). This prohibition covers those vendors and contractors who:

(1) have a contract with a governmental agency; or
(2) have performed under such a contract within the past year; or
(3) anticipate bidding on such a contract in the future.

For additional information regarding the specific requirements and exemptions, vendors and contractors are encouraged to review Executive Order 24 and *G.S. § 133-32*.

Executive Order 24 also encouraged and invited other State Agencies to implement the requirements and prohibitions of the Executive Order to their agencies. Vendors and contractors should contact other State Agencies to determine if those agencies have adopted Executive Order 24.

BRIDGE APPROACH FILLS

(9-1-11) DB4 R01

Description

Bridge approach fills include bridge approach fills for sub regional tier bridges and reinforced bridge approach fills. Construct bridge approach fills in accordance with the contract and *Roadway Standard Drawings* No. 422.10 or 422.11. Define "geosynthetics" as geotextiles or geomembranes.

Materials

Refer to Division 10 of the *Standard Specifications*:

Item	Section
Anchor Pins	1056-2
Geotextiles	1056
Portland Cement Concrete	1000
Select Material	1016
Subsurface Drainage Materials	1044
Wire Staples	1060-8(D)

For bridge approach fills for sub regional tier bridges, provide Type 1 geotextile for filtration geotextiles. For reinforced bridge approach fills, provide Type 5 geotextile for geotextile reinforcement and Type 1 geotextile and No. 78M stone for drains. Use Class B concrete for concrete pads.

Use Class III or V select material for reinforced bridge approach fills and only Class V select material (standard size No. 78M stone) for bridge approach fills for sub regional tier bridges. Provide PVC pipes, fittings and outlet pipes for subsurface drainage materials. For drains and PVC pipes behind end bents, use pipes with perforations that meet AASHTO M 278.

Use PVC, HDPE or linear low density polyethylene (LLDPE) geomembranes for reinforced bridge approach fills. For PVC geomembranes, provide grade PVC30 geomembranes that meet ASTM D7176. For HDPE and LLDPE geomembranes, use geomembranes with a nominal thickness of at least 30 mils that meet Geosynthetic Research Institute Standard Specifications GM13 or GM17, respectively. Handle and store geomembranes in accordance with Article 1056-2 of the *Standard Specifications*. Provide material certifications for geomembranes in accordance with Article 1056-3 of the *Standard Specifications*.

Construction Methods

Excavate as necessary for bridge approach fills in accordance with the contract. Notify the Engineer when foundation excavation is complete. Do not place geomembranes or filtration geotextiles until excavation dimensions and foundation material are approved. Attach geomembranes and filtration geotextiles to end bent cap back and wing walls with adhesives, tapes or other approved methods. Glue or weld geomembrane seams to prevent leakage.

For reinforced bridge approach fills, place geotextile reinforcement within 3" of locations shown in Standard Drawing No. 422.10 and in slight tension free of kinks, folds, wrinkles or creases. Install geotextile reinforcement with the orientation, dimensions and number of layers shown in Standard Drawing No. 422.10. Place first layer of geotextile reinforcement directly on geomembranes with no void or material in between. Install geotextile reinforcement with the machine direction (MD) parallel to the roadway centerline. The MD is the direction of the length or long dimension of the geotextile roll. Do not splice or overlap geotextile reinforcement in the MD so seams are perpendicular to the roadway centerline. Wrap geotextile reinforcement at end bent cap back and wing walls as shown in Standard Drawing No. 422.10 and directed by the Engineer. Extend geotextile reinforcement at least 4 feet back behind end bent cap back and wing walls into select material.

Overlap adjacent geotextiles at least 18" with seams oriented parallel to the roadway centerline. Hold geotextiles in place with wire staples or anchor pins as needed. Contact the Engineer when existing or future obstructions such as foundations, pavements, pipes, inlets or utilities will interfere with geosynthetics.

For reinforced bridge approach fills, construct one foot square drains consisting of 4" diameter continuous perforated PVC pipes surrounded by No. 78M stone wrapped in Type 1 geotextiles. Install drains in accordance with Standard Drawing No. 422.10. For bridge approach fills for sub

regional tier bridges, install 4" diameter continuous perforated PVC drain pipes in accordance with Standard Drawing No. 422.11.

Use solvent cement to connect PVC pipes so joints do not leak. Connect perforated pipes to outlet pipes just behind wing walls. Provide drain pipes and drains with positive drainage towards outlets. Place pipe sleeves in or under wing walls for outlet pipes so positive drainage is maintained. Use sleeves that can withstand wing wall loads.

Place select material in 8" to 10" thick lifts. Use only hand operated compaction equipment to compact select material for bridge approach fills. Compact Class III select material in accordance with Subarticle 235-3(C) of the *Standard Specifications*. Compact No. 78M stone with a vibratory compactor to the satisfaction of the Engineer. Do not displace or damage geosynthetics, drain pipes or drains when placing and compacting select material. End dumping directly on geosynthetics is not permitted. Do not operate heavy equipment on geosynthetics, drain pipes or drains until they are covered with at least 8" of select material. Replace any damaged geosynthetics, drain pipes or drains to the satisfaction of the Engineer.

Cover open ends of outlet pipes with rodent screens as shown in Standard Drawing No. 815.03. Connect ends of outlet pipes to concrete pads or existing drainage structures as directed by the Engineer. Construct concrete pads with an ordinary surface finish that meets Subarticle 825-6(B) of the *Standard Specifications*.

PREPARATION OF SUBGRADE AND BASE

(9-1-11) DB5 R05

On mainline portions and ramps of this project, prepare the subgrade and base beneath the pavement structure in accordance with the applicable sections of the 2012 *Standard Specifications for Roads and Structures* except use an automatically controlled fine grading machine utilizing string lines, laser controls, or other approved methods to produce final subgrade and base surfaces meeting the lines, grades, and cross sections required by the plans or established by the Engineer.

ASPHALT BINDER CONTENT OF ASPHALT PLANT MIXES

(10-6-05) DB6 R15

The approximate asphalt binder content of the asphalt concrete plant mixtures used on this project will be as follows:

Asphalt Concrete Base Course	Type B 25.0_	4.4%
Asphalt Concrete Intermediate Course	Type I 19.0_	4.8%
Asphalt Concrete Surface Course	Type S 4.75A	6.8%
Asphalt Concrete Surface Course	Type SF 9.5A	6.7%
Asphalt Concrete Surface Course	Type S 9.5_	6.0%
Asphalt Concrete Surface Course	Type S 12.5_	5.5%

The actual asphalt binder content will be established during construction by the CEI firm within the limits established in the 2012 *Standard Specifications* or Project Special Provisions.

ASPHALT PLANT MIXTURES

(07-01-95) DB6 R20

Place asphalt concrete base course material in trench sections with asphalt pavement spreaders made for the purpose or with other equipment approved by the Engineer.

FINAL SURFACE TESTING - ASPHALT PAVEMENTS

(9-1-11) DB6 R45

On -Y- lines of this project where the typical section requires two or more layers of new pavement, perform acceptance testing of the longitudinal profile of the finished pavement surface in accordance with Article 610-13 of the 2012 Standard Specification for Roads and Structures using a North Carolina Hearne Straightedge (Model No. 1) except as modified herein.

Replace Table 610-8 with the following:

Adjustment Schedule for Cumulative Straightedge Index (CSI) (Obtained by adding SE Index of up to 25 consecutive 100 ft. (30m) sections)		
***CSI**	**ACCEPTANCE CATEGORY**	**CORRECTIVE ACTION**
0-0	Acceptable	None
1-0 or 2-0	Acceptable	None
3-0 or 4-0	Acceptable	None
Any Other Number	Unacceptable	Required

***Either Before or After Corrective Actions**

Replace the 14th paragraph of Article 610-13(B) with the following:

Correct any deviation that exceeds a 0.3 inch (7.5 mm) blanking band such that the deviation is reduced to 0.2 inches (5 mm) or less.

Replace the 16th, 17th, 18th, and 19th paragraphs of Article 610-13(B) with the following:

Take corrective actions as specified if the CSI indicates “Required” corrective action. The CSI after corrective action should meet or exceed “Acceptable” requirements.

Where corrective action is required, the test section(s) requiring corrective action will be retested, unless the Engineer directs the retesting of the entire lot.

Test sections and/or lots that are initially tested by the Design-Build Team which indicate excessive deviations such that corrective action is required, may be re-rolled with asphalt rollers while the mix is still warm and in a workable condition, to possibly correct the problem. In this instance, reevaluation of the test section(s) must be completed within 24 hours of pavement placement and these test results will serve as the initial test results.

AGGREGATE GRADATION FOR COARSE AGGREGATE:

(01/06/2012) 1005 DB10 R01

Revise the *2012 Standard Specifications* as follows:

Page 10-23, Table 1005-1, AGGREGATE GRADATION-COARSE AGGREGATE, replace with the following:

TABLE 1005-1
AGGREGATE GRADATION - COARSE AGGREGATE

Std. Size #	2"	1 1/2"	1"	3/4"	1/2"	3/8"	#4	#8	#10	#16	#40	#200	Remarks
	Percentage of Total by Weight Passing												
4	100	90-100	20-55	0-15	-	0-5	-	-	-	-	-	**A**	Asphalt Plant Mix
467M	100	95-100	-	35-70	-	0-30	0-5	-	-	-	-	**A**	Asphalt Plant Mix
5	-	100	90-100	20-55	0-10	0-5	-	-	-	-	-	**A**	AST, Sediment Control Stone
57	-	100	95-100	-	25-60	-	0-10	0-5	-	-	-	**A**	AST, Str. Concrete, Shoulder Drain, Sediment Control Stone
57M	-	100	95-100	-	25-45	-	0-10	0-5	-	-	-	**A**	AST, Concrete Pavement
6M	-	-	100	90-100	20-55	0-20	0-8	-	-	-	-	**A**	AST
67	-	-	100	90-100	-	20-55	0-10	0-5	-	-	-	**A**	AST, Str. Concrete, Asphalt Plant Mix
78M	-	-	-	100	98-100	75-100	20-45	0-15	-	-	-	**A**	Asphalt Plant Mix, AST, Str. Conc, Weep Hole Drains
14M	-	-	-	-	-	100	35-70	5-20	-	0-8	-	**A**	Asphalt Plant Mix, AST, Weep Hole Drains, Str. Concrete
9	-	-	-	-	-	100	85-100	10-40	-	0-10	-	**A**	AST
ABC	-	100	75-97	-	55-80	-	35-55	-	25-45	-	14-30	4-12[B]	Aggregate Base Course, Aggregate Stabilization
ABC (M)	-	100	75-100	-	45-79	-	20-40	-	0-25	-	-	0-12[B]	Maintenance Stabilization
Light-weight[C]	-	-	-	-	100	80-100	5-40	0-20	-	0-10	-	0-2.5	AST

A. See Subarticle 1005-4(A).
B. See Subarticle 1005-4(B).
C. For Lightweight Aggregate used in Structural Concrete, see Subarticle 1014-2(E)(6).

TYING PROPOSED CONCRETE PAVEMENT TO EXISTING CONCRETE PAVEMENT

(07-01-95) DB7 R05

Tie proposed concrete pavement on this project to existing concrete pavement in accordance with the detail shown in the plans and the following provision:

1. Drill holes in the existing concrete pavement 1/8" greater than the diameter of the dowel bar. After drilling, blow the hole out with air and allow to dry.

2. Next, place the cement grout or epoxy resin in the back of the dowel hole. The placement of grout can be achieved by using a flexible tube with a long nose that places the material in the back of the dowel hole; the placement of epoxy-type materials can be achieved by using a cartridge with a long nozzle that dispenses the material to the rear of the dowel hole.

3. Insert the dowel into the hole with a slight twisting motion so that the material in the back of the hole is forced up and around the dowel bar to ensure a uniform coating of the anchoring material over the dowel bar.

4. Place a thin nylon or plastic grout retention disk, (1/16" minimum thickness) manufactured to slip tightly over the dowel over the dowel and against the slab face to prevent the anchoring material from flowing out of the hole, and to create an effective face at the entrance of the dowel hole.

TYING PROPOSED ASPHALT PAVEMENT TO EXISTING CONCRETE PAVEMENT

07/01/95 DB7 R12

Tie the proposed asphalt pavement on this project to the existing concrete pavement in accordance with the contract documents and the following provision:

Bevel the end of the existing concrete pavement on a 1:1 slope prior to placing the asphalt pavement. Saw the bevel with a concrete saw as directed by the Engineer prior to breaking the concrete away.

DIAMOND GRINDING CONCRETE PAVEMENT (10-28-11)

The operations detailed in this special provision will take effect if the design build team elects to diamond grind the completed concrete pavement surface or is required to diamond grind due to excessive corrective action to achieve a satisfactory International Roughness Index (IRI) in accordance with the Standard Special Provisions.

Perform the work covered by this provision including but not limited to diamond grinding and regrinding concrete pavement to meet final smoothness IRI testing requirements, evaluating existing concrete pavement and aggregate properties, selecting diamond tipped saw blades and configuration of cutting head; continual removal of residual slurry from pavement and disposal; providing necessary traffic control; furnishing all labor, materials, supplies, tools, equipment and incidentals as necessary.

Use equipment with diamond tipped saw blades gang mounted on a power driven self-propelled machine with a minimum wheel base length of 15 feet (4.6 meter) that is specifically designed to smooth and texture portland cement concrete pavement. Utilize equipment that does not cause ravels; aggregate fracture; spalls or disturbance to the longitudinal or transverse joints; or damage and/or strain to the underlying surface of the pavement. Should any of the above problems occur immediately suspend operations.

Provide a minimum 3 feet (1 meter) wide grinding head with 50 (164) to 60 (200) evenly spaced grooves per foot (meter). Prior to designing the grinding head, evaluate the aggregate hardness of the concrete pavement and select the appropriate diamond size, diamond concentration and bond hardness for the individual saw blades.

Provide vacuuming equipment to continuously remove slurry residue and excess water from the pavement as part of the grinding operation. Transport slurry material and properly dispose of this material. Do not allow the slurry material to flow into a travel lane occupied by traffic or into any drainage facility, tributary, or waterway.

Grind the pavement surface to a uniform appearance with a high skid resistant longitudinal corduroy type texture. Provide grooves between 0.09 (2.28mm) and 0.15 (3.81mm) inches wide with the land area between the grooves between 0.06 (1.52mm) and 0.13 (3.30mm) inches wide. Ensure a ridge peak of approximately 0.0625 inches (1.59mm) higher than the bottom of the grooves.

Begin and end diamond grinding at lines normal to the pavement centerline. Grind only in the longitudinal direction. All grooves and adjacent passes shall be parallel to each other with no variation. Completely lap adjacent passes with no unground surface remaining between passes and no overlap of more than 1 1/2 inches (35 mm). Adjacent passes shall be within 1/8 inch (10mm) of the same height as measured with a 3 foot (0.914meter) straightedge. Maintain positive cross-slope drainage for the duration of the grinding operation.

Grind all travel lanes to include auxiliary lanes, ramps and loops with not less than 98 percent of the specified surface being textured by grinding. Grinding of the bridge decks and concrete shoulders will not be required. Remove a minimum 0.0625 inches at all locations except dips. Extra grinding to eliminate minor depressions is not required. There shall be no ridge between lanes. In a separate operation, transition the grinding of any remaining ridges greater than 1/8 inch (10 mm) in height on the outside edge next to the shoulder or at a tie to an existing facility to the satisfaction of the Engineer.

SUBSURFACE DRAINAGE

(9-1-11) DB8 R05

Revise the 2012 *Standard Specifications for Roads and Structures* as follows:

Page 8-11, Article 815-1, Delete the first sentence and replace with the following:

The Design-Build Team shall construct subsurface drains, underdrains, blind drains and other types of drains where groundwater is within 6 feet of subgrade.

GUARDRAIL ANCHOR UNITS, TYPE M-350

(9-1-11) DB8 R60

Description

Furnish and install guardrail anchor units in accordance with the details in the plans developed by the Design-Build Team, the applicable requirements of Section 862 of the 2012 *Standard Specifications for Roads and Structures*, and at locations shown in the plans.

Materials

The Design Build Team may, at his option, furnish any one of the following guardrail anchor units or approved equal.

The guardrail anchor unit (SRT-350) as manufactured by:

TRINITY INDUSTRIES, INC.
2525 N. STEMMONS FREEWAY
DALLAS, TEXAS 75207
TELEPHONE: 800 644-7976

The guardrail anchor unit (FLEAT) as manufactured by:

ROAD SYSTEMS, INC.
3616 OLD HOWARD COUNTY AIRPORT
BIG SPRINGS, TEXAS 79720
TELEPHONE: 915-263-2435

The guardrail anchor unit (REGENT) as manufactured by:

ENERGY ABSORPTION SYSTEMS, INC.
ONE EAST WACKER DRIVE
CHICAGO, ILLINOIS 60601-2076
TELEPHONE: 888-32-ENERGY

Prior to installation the Design Build Team shall submit to the Engineer:

1. FHWA acceptance letter for each guardrail anchor unit certifying it meets the requirements of NCHRP Report 350, Test Level 3, in accordance with Section 106-2 of the 2012 *Standard Specifications for Roads and Structures.*

2. Certified working drawings and assembling instructions from the manufacturer for each guardrail anchor unit in accordance with Section 105-2 of the 2012 *Standard Specifications for Roads and Structures*.

No modifications shall be made to the guardrail anchor unit without the express written permission from the manufacturer. Perform installation in accordance with the details in the plans, and details and assembling instructions furnished by the manufacturer.

Construction

Guardrail end delineation is required on all approach and trailing end sections for both temporary and permanent installations. Guardrail end delineation consists of yellow reflective sheeting applied to the entire end section of the guardrail in accordance with Section 1088-3 of the 2012 *Standard Specifications for Roads and Structures* and is incidental to the cost of the guardrail anchor unit.

GUARDRAIL ANCHOR UNITS, TYPE 350

(9-1-11) DB8 R65

Description

Furnish and install guardrail anchor units in accordance with the details in the plans as developed by the Design-Build Team, the applicable requirements of Section 862 of the 2012 *Standard Specifications for Roads and Structures*, and at locations shown in the plans.

Materials

The Design-Build Team may at his option, furnish any one of the guardrail anchor units or approved equal.

Guardrail anchor unit (ET-2000) as manufactured by:

TRINITY INDUSTRIES, INC.
2525 N. STEMMONS FREEWAY
DALLAS, TEXAS 75207
TELEPHONE: 800-644-7976

The guardrail anchor unit (SKT 350) as manufactured by:

ROAD SYSTEMS, INC.
3616 OLD HOWARD COUNTY AIRPORT
BIG SPRING, TEXAS 79720
TELEPHONE: 915 263-2435

Prior to installation the Design-Build Team shall submit to the Engineer:

1. FHWA acceptance letter for each guardrail anchor unit certifying it meets the requirements of NCHRP Report 350, Test Level 3, in accordance with Section 106-2 of 2012 *Standard Specifications for Roads and Structures*.

2. Certified working drawings and assembling instructions from the manufacturer for each guardrail anchor unit in accordance with Section 105-2 of the 2012 *Standard Specifications for Roads and Structures*.

No modifications shall be made to the guardrail anchor unit without the express written permission from the manufacturer. Perform installation in accordance with the details in the plans, and details and assembling instructions furnished by the manufacturer.

Construction

Guardrail end delineation is required on all approach and trailing end sections for both temporary and permanent installations. Guardrail end delineation consists of yellow reflective sheeting applied to the entire end section of the guardrail in accordance with Section 1088-3 of the 2012 *Standard Specifications for Roads and Structures* and is incidental to the cost of the guardrail anchor unit.

IMPACT ATTENUATOR UNITS, TYPE 350

(9-1-11) DB8 R75

Description

Furnish and install impact attenuator units and any components necessary to connect the impact attenuator units in accordance with the manufacturer's requirement, the details in the plans and at locations shown in the plans.

Materials

NON-GATING IMPACT ATTENUATOR UNITS:

The impact attenuator unit (QUADGUARD) as manufactured by:

ENERGY ABSORPTION SYSTEMS, INC.
ONE EAST WACKER DRIVE
CHICAGO, ILLINOIS 60601-2076
TELEPHONE: 312-467-6750

The impact attenuator unit (TRACC) as manufactured by:

TRINITY INDUSTRIES, INC.
2525 N. STEMMONS FREEWAY
DALLAS, TEXAS 75207
TELEPHONE: 1-800-644-7976

GATING IMPACT ATTENUATOR UNITS:

The impact attenuator unit (BRAKEMASTER) as manufactured by:

ENERGY ABSORPTION SYSTEMS, INC.
ONE EAST WACKER DRIVE
CHICAGO, ILLINOIS 60601-2076
TELEPHONE: 312-467-6750

The impact attenuator unit (CAT) as manufactured by:

TRINITY INDUSTRIES, INC.
2525 N. STEMMONS FREEWAY
DALLAS, TEXAS 75207
TELEPHONE: 1-800-644-7976

Prior to installation the Design-Build Team shall submit to the Engineer:

1. FHWA acceptance letter for each impact attenuator unit certifying it meets the requirements of NCHRP Report 350, Test Level 3, in accordance with Section 106-2 of the 2012 *Standard Specifications for Roads and Structures.*

2. Certified working drawings and assembling instructions from the manufacturer for each impact attenuator unit in accordance with Section 105-2 of the 2012 *Standard Specifications for Roads and Structures*.

No modifications shall be made to the impact attenuator unit without the express written permission from the manufacturer. Perform installation in accordance with the details in the plans, and details and assembling instructions furnished by the manufacturer.

Construction Methods

If the median width is 40 feet or less, the Design-Build Team shall supply one of the NON-GATING Impact Attenuator Units listed in the Materials Section herein.

If the median width is greater than 40 feet, the Design-Build Team may use any of the GATING or NON-GATING Impact Attenuator Units listed in the Materials Section herein.

PREFORMED SCOUR HOLE WITH LEVEL SPREADER APRON

(08-24-09) DB8 R105

Description

Construct and maintain preformed scour holes with spreader aprons at the locations shown on the plans and in accordance with the details in the plans. Work includes excavation, shaping and maintaining the hole and apron, furnishing and placing filter fabric, rip rap (class as specified in the plans) and permanent soil reinforcement matting.

Materials

Item	Section
Plain rip rap	1042
Filter Fabric	1056

The permanent soil reinforcement matting shall be permanent erosion control reinforcement mat and shall be constructed of synthetic or a combination of coconut and synthetic fibers evenly distributed throughout the mat between a bottom UV stabilized netting and a heavy duty UV stabilized top net. The matting shall be stitched together with UV stabilized polypropropylene

thread to form a permanent three dimensional structure. The mat shall have the following minimum physical properties:

Property	*Test Method*	*Value Unit*
Light Penetration	ASTM D6567	9 %
Thickness	ASTM D6525	0.40 in
Mass Per Unit Area	ASTM D6566	0.55 lb/sy
Tensile Strength	ASTM D6818	385 lb/ft
Elongation (Maximum)	ASTM D6818	49 %
Resiliency	ASTM D1777	>70 %
UV Stability *	ASTM 4355	≥80 %
Porosity (Permanent Net)	ECTC Guidelines	≥85 %
Maximum Permissible Shear Stress (Vegetated)	Performance Bench Test	≥8.0 lb/ft^2
Maximum Allowable Velocity (Vegetated)	Performance Bench Test	≥16.0 ft/s

*ASTM D1682 Tensile Strength and % strength retention of material after 1000 hours of exposure.

A certification (Type 1, 2, or 3) from the manufacturer showing:

(A) the chemical and physical properties of the mat used, and

(B) conformance of the mat with this specification will be required.

Construction Methods

All areas to be protected with the mat shall be brought to final grade and seeded in accordance with Section 1660 of the *Standard Specifications*. The surface of the soil shall be smooth, firm, stable and free of rocks, clods, roots or other obstructions that would prevent the mat from lying in direct contact with the soil surface. Areas where the mat is to be placed will not need to be mulched.

STREET SIGNS AND MARKERS AND ROUTE MARKERS

(07-01-95) DB9 R01

Move any existing street signs, markers, and route markers out of the construction limits of the project and install the street signs and markers and route markers so that they will be visible to the traveling public if there is sufficient right of way for these signs and markers outside of the construction limits.

Near the completion of the project and when so directed by the Engineer, move the signs and markers and install them in their proper location in regard to the finished pavement of the project.

Stockpile any signs or markers that cannot be relocated due to lack of right of way, or any signs and markers that will no longer be applicable after the construction of the project, at locations directed by the Engineer for removal by others.

The Design-Build Team shall be responsible to the owners for any damage to any street signs and markers or route markers during the above described operations.

TEMPORARY SHORING

(9-11-11) DB11 R02

Description

Temporary shoring includes cantilever, braced and anchored shoring and temporary mechanically stabilized earth (MSE) walls. Temporary shoring does not include trench boxes. At the Design-Build Team's option, use any type of temporary shoring. In addition, the Design-Build Team may elect to consider the use of standard shoring where appropriate. In such case, the Standard Shoring Project Special Provision, standard shoring selection forms, and Standard Temporary Shoring Drawings No. 1801.01 and/or 1801.02 will apply. The Standard Shoring provision can be found at:

www.ncdot.org/doh/preconstruct/highway/geotech/provnote/2012/

and the standard shoring selection forms and aforementioned drawings may be found at:

www.ncdot.org/doh/preconstruct/highway/geotech/formdet/2012/

Design and construct temporary shoring based on actual elevations and shoring dimensions in accordance with the contract and accepted submittals. Construct temporary shoring at locations shown in the plans developed by the Design-Build Team. Temporary shoring is required to maintain traffic when a 2:1 (H:V) slope from the top of an embankment or bottom of an excavation will intersect the existing ground line less than 5 feet from the edge of pavement of an open travelway. This provision does not apply to pipe, inlet or utility installation unless noted otherwise in the plans.

Positive protection includes concrete barrier and temporary guardrail. Provide positive protection for temporary shoring at locations shown in the plans and as directed. Positive protection is required if temporary shoring is located in the clear zone in accordance with the *AASHTO Roadside Design Guide*.

(A) Cantilever and Braced Shoring

Cantilever shoring consists of steel sheet piles or H-piles with timber lagging. Braced shoring consists of sheet piles or H-piles with timber lagging and bracing such as beams, plates, walers, struts, rakers, etc. Define "piles" as sheet piles or H-piles.

(B) Anchored Shoring

Anchored shoring consists of sheet piles with walers or H-piles with timber lagging anchored with ground or helical anchors. Driven anchors may be accepted at the discretion of the Engineer. A ground anchor consists of a grouted steel bar or multi-strand tendon with an anchorage. A helical anchor consists of a lead section with a central steel shaft and at least one helix steel plate followed by extensions with only central shafts (no helixes) and an anchorage. Anchorages consist of steel bearing plates with washers and hex nuts

for bars or steel wedge plates and wedges for strands. Define "anchors" as ground, helical or driven anchors. Use a prequalified Anchored Wall Contractor to install anchors.

(C) Temporary MSE Walls

Temporary MSE walls include temporary geosynthetic and wire walls. Define "temporary wall" as a temporary MSE wall. Define "reinforcement" as geotextile, geogrid, welded wire grid or metallic strip reinforcement.

Temporary geosynthetic walls consist of geotextile or geogrid reinforcement wrapped behind welded wire facing. Define "temporary geotextile wall" as a temporary geosynthetic wall with geotextile reinforcement and "temporary geogrid wall" as a temporary geosynthetic wall with geogrid reinforcement.

Temporary wire walls consist of welded wire grid or metallic strip reinforcement connected to welded wire facing. Define "Wire Wall Vendor" as the vendor supplying the temporary wire wall.

(D) Embedment

Define "embedment" for cantilever, braced and anchored shoring as the pile depth below the grade in front of shoring. Define "embedment" for temporary walls as the wall height below the grade in front of walls.

(E) Positive Protection

Define "unanchored or anchored portable concrete barrier" as portable concrete barrier (PCB) that meets *Roadway Standard Drawings* No. 1170.01. Define "concrete barrier" as unanchored or anchored PCB or an approved equal. Define "temporary guardrail" as temporary steel beam guardrail that meets *Roadway Standard Drawings* No. 862.02.

Materials

Refer to the *Standard Specifications*.

Item	Section
Anchor Pins	1056-2
Concrete Barrier Materials	1170-2
Flowable Fill, Excavatable	1000-6
Geotextiles	1056
Neat Cement Grout	1003
Portland Cement Concrete	1000
Select Material	1016
Steel Beam Guardrail Materials	862-2
Steel Sheet Piles and H-Piles	1084
Untreated Timber	1082-2
Welded Wire Reinforcement	1070-3
Wire Staples	1060-8(D)

Provide Type 6 material certifications for shoring materials. Use Class IV select material (standard size No. ABC) for temporary guardrail.

For drilled-in H-piles, use nonshrink neat cement grout or Class A concrete that meets Article 1000-4 of the *Standard Specifications* except as modified herein. Provide concrete with a slump of 6" to 8". Use an approved high-range water reducer to achieve this slump.

Use untreated timber with a thickness of at least 3" and a bending stress of at least 1,000 psi for timber lagging. Provide steel bracing that meets ASTM A36.

(A) Shoring Backfill

Use Class II, Type 1, Class III, Class V or Class VI select material or material that meets AASHTO M 145 for soil classification A-2-4 with a maximum PI of 6 for shoring backfill except do not use A-2-4 soil for backfill around culverts.

(B) Anchors

Store anchor materials on blocking a minimum of 12" above the ground and protect it at all times from damage; and when placing in the work make sure it is free from dirt, dust, loose mill scale, loose rust, paint, oil or other foreign materials. Load, transport, unload and store anchor materials such that they are kept clean and free of damage. Damaged or deformed materials will be rejected.

(1) Ground Anchors

Use high-strength steel bars that meet AASHTO M 275 or seven-wire strands that meet ASTM A886 or Article 1070-5 of the *Standard Specifications*. Splice bars in accordance with Article 1070-9 of the *Standard Specifications*. Do not splice strands.

Provide bondbreakers, spacers and centralizers that meet Article 6.3.5 of the *AASHTO LRFD Bridge Construction Specifications*. Use neat cement grout for ground anchors.

(2) Helical Anchors

Use helical anchors with an ICC Evaluation Service, Inc. (ICC-ES) report. Helical anchors without an ICC-ES report may be approved at the discretion of the Engineer. Provide couplers, thread bar adapters and bolts recommended by the Anchor Manufacturer to connect helical anchors together and to piles.

(3) Anchorages

Provide bearing plates that meet Article 6.3.3 of the *AASHTO LRFD Bridge Construction Specifications* and washers, hex nuts, wedge plates and wedges recommended by the Anchor Manufacturer.

(C) Temporary Walls

(1) Welded Wire Facing

Use welded wire reinforcement for welded wire facing, struts and wires. For temporary wire walls, provide welded wire facing supplied by the Wire Wall Vendor or a manufacturer approved or licensed by the vendor. For temporary wire walls with separate reinforcement and facing components, provide connectors (e.g., bars, clamps, plates, etc.) and fasteners (e.g., bolts, nuts, washers, etc.) required by the Wire Wall Vendor.

(2) Geotextiles

Provide Type 2 geotextile for separation and retention geotextiles. Provide Type 5 geotextile for geotextile reinforcement with wide width tensile strengths at ultimate in accordance with the accepted submittals.

(3) Geogrid Reinforcement

Handle and store geogrids in accordance with Article 1056-2 of the *Standard Specifications*. Define "machine direction" (MD) and "cross-machine direction" (CD) for geogrids in accordance with ASTM D4439. Provide geogrids for geogrid reinforcement with short-term design strengths in accordance with the accepted submittals.

Use geogrids with a roll width of at least 4 feet and an "approved" or "approved for provisional use" status code. Geogrids are approved for short-term design strengths for a 3-year design life in the MD and CD based on material type. The list of approved geogrids with short-term design strengths is available from:

www.ncdot.org/doh/operations/materials/soils/gep.html

Define material type from the website above for shoring backfill as follows:

Material Type	Shoring Backfill
Borrow	A-2-4 Soil
Fine Aggregate	Class II, Type 1 or Class III Select Material
Coarse Aggregate	Class V or VI Select Material

If an approved geogrid does not list a short-term design strength in the MD for the shoring backfill used, do not use the geogrid for geogrid reinforcement. If an approved geogrid does not list a short-term design strength in the CD for the shoring backfill used, do not install the geogrid with the MD parallel to the wall face.

(4) Welded Wire Grid and Metallic Strip Reinforcement

Provide welded wire grid and metallic strip reinforcement supplied by the Wire Wall Vendor or a manufacturer approved or licensed by the vendor. Use welded wire grid

reinforcement ("mesh", "mats" and "ladders") that meet Article 1070-3 of the *Standard Specifications* and metallic strip reinforcement ("straps") that meet ASTM A572 or A1011.

Preconstruction Requirements

(A) Concrete Barrier

Define "clear distance" behind concrete barrier as the horizontal distance between the barrier and edge of pavement. The minimum required clear distance for concrete barrier is shown in the plans. At the Design-Build Team's option or if the minimum required clear distance is not available, set concrete barrier next to and up against traffic side of temporary shoring except for barrier above temporary walls. Concrete barrier with the minimum required clear distance is required above temporary walls.

(B) Temporary Guardrail

Define "clear distance" behind temporary guardrail as the horizontal distance between guardrail posts and temporary shoring. At the Design-Build Team's option or if clear distance for cantilever, braced and anchored shoring is less than 4 feet, attach guardrail to traffic side of shoring as shown in the plans. Place ABC in clear distance and around guardrail posts instead of pavement. Do not use temporary guardrail above temporary walls.

(C) Temporary Shoring Designs

Before beginning temporary shoring design, survey existing ground elevations in the vicinity of shoring locations to determine actual design heights (H). Submit 8 copies of working drawings and 3 copies of design calculations and a PDF copy of each for temporary shoring designs in accordance with Article 105-2 of the *Standard Specifications*. Submit working drawings showing plan views, shoring profiles, typical sections and details of temporary shoring design and construction sequence. Do not begin shoring construction until a design submittal is accepted.

Have cantilever and braced shoring designed, detailed and sealed by an engineer licensed in the state of North Carolina. Use a prequalified Anchored Wall Design Consultant to design anchored shoring. Provide anchored shoring designs sealed by a Design Engineer approved as a Geotechnical Engineer (key person) for an Anchored Wall Design Consultant. Include details in anchored shoring working drawings of anchor locations and lock-off loads, unit grout/ground bond strengths for ground anchors or minimum installation torque and torsional strength rating for helical anchors and if necessary, obstructions extending through shoring or interfering with anchors. Include details in the anchored shoring construction sequence of pile and anchor installation, excavation and anchor testing.

Use a prequalified MSE Wall Design Consultant to design temporary walls. Provide temporary wall designs sealed by a Design Engineer approved as a Geotechnical Engineer (key person) for the MSE Wall Design Consultant. Include details in temporary wall

working drawings of geotextile and reinforcement types, locations and directions and obstructions extending through walls or interfering with reinforcement.

(1) Soil Parameters

Design temporary shoring for the assumed soil parameters and groundwater elevations shown in the plans. Assume the following soil parameters for shoring backfill:

(a) Unit weight (γ) = 120 lb/cf;

(b)	**Friction Angle (ϕ)**	**Shoring Backfill**
	30°	A-2-4 Soil
	34°	Class II, Type 1 or Class III Select Material
	38°	Class V or VI Select Material

(c) Cohesion (c) = 0 lb/sf.

(2) Traffic Surcharge

Design temporary shoring for a traffic surcharge of 250 lb/sf if traffic will be above and within H of shoring. This traffic surcharge does not apply to construction traffic. Design temporary shoring for any construction surcharge if construction traffic will be above and within H of shoring. For LRFD shoring designs, apply traffic (live load) surcharge in accordance with Figure C11.5.5-3 of the *AASHTO LRFD Bridge Design Specifications*.

(3) Cantilever, Braced and Anchored Shoring Designs

Use shoring backfill for fill sections and voids between cantilever, braced and anchored shoring and the critical failure surface. Use grout or concrete for embedded portions of drilled-in H-piles. Do not use drilled-in sheet piles.

Define "top of shoring" for cantilever, braced and anchored shoring as where the grade intersects the back of sheet piles or H-piles and timber lagging. Design cantilever, braced and anchored shoring for a traffic impact load of 2,000 lb/ft applied 18" above top of shoring if concrete barrier is above and next to shoring or temporary guardrail is above and attached to shoring. For anchored shoring designs, apply traffic impact load as horizontal load (P_{H1}) in accordance with Figure 3.11.6.3-2(a) of the AASHTO LRFD specifications.

Extend cantilever, braced and anchored shoring at least 32" above top of shoring if shoring is designed for traffic impact. Otherwise, extend shoring at least 6" above top of shoring.

Design cantilever, braced and anchored shoring for a maximum deflection of 3" if the horizontal distance to the closest edge of pavement or structure is less than H. Otherwise, design shoring for a maximum deflection of 6". Design cantilever and

braced shoring in accordance with the plans and *AASHTO Guide Design Specifications for Bridge Temporary Works*.

Design anchored shoring in accordance with the plans and Article 11.9 of the *AASHTO LRFD Bridge Design Specifications*. Use a resistance factor of 0.80 for tensile resistance of anchors with bars, strands or shafts. Extend the unbonded length for ground anchors and the shallowest helix for helical anchors at least 5 feet behind the critical failure surface. Do not extend anchors beyond right-of-way or easement limits. If existing or future obstructions such as foundations, guardrail posts, pavements, pipes, inlets or utilities will interfere with anchors, maintain a clearance of at least 6" between obstructions and anchors.

(4) Temporary Wall Designs

Use shoring backfill in the reinforced zone of temporary walls. Separation geotextiles are required between shoring backfill and backfill, natural ground or culverts along the sides of the reinforced zone perpendicular to the wall face. For Class V or VI select material in the reinforced zone, separation geotextiles are also required between shoring backfill and backfill or natural ground on top of and at the back of the reinforced zone.

Design temporary walls in accordance with the plans and Article 11.10 of the *AASHTO LRFD Bridge Design Specifications*. Embed temporary walls at least 18" except for walls on structures or rock as determined by the Engineer. Use a uniform reinforcement length throughout the wall height of at least 0.7H or 6 ft, whichever is greater. Extend the reinforced zone at least 6" beyond end of reinforcement. Do not locate the reinforced zone outside right-of-way or easement limits.

Use the simplified method for determining maximum reinforcement loads in accordance with the AASHTO LRFD specifications. For geotextile reinforcement, use geotextile properties approved by the Department or default values in accordance with the AASHTO LRFD specifications. For geogrid reinforcement, use approved geogrid properties available from the website shown elsewhere in this provision. Use geosynthetic properties for the direction reinforcement will be installed, a 3-year design life and the shoring backfill type in the reinforced zone.

Do not use more than 4 different reinforcement strengths for each temporary geosynthetic wall. Design temporary geotextile walls for a reinforcement coverage ratio (R_c) of 1.0 and temporary geogrid walls for an R_c of at least 0.8. For geogrid reinforcement with an R_c of less than 1.0, use a maximum horizontal clearance between geogrids of 3 feet and stagger reinforcement so geogrids are centered over gaps in the reinforcement layer below.

For temporary geosynthetic walls, use “L” shaped welded wire facing with 18" to 24" long legs. Locate geotextile or geogrid reinforcement so reinforcement layers are at the same level as the horizontal legs of welded wire facing. Use vertical reinforcement spacing equal to facing height. Wrap geotextile or geogrid

reinforcement behind welded wire facing and extend reinforcement at least 3 feet back behind facing into shoring backfill.

For temporary wire walls with separate reinforcement and facing components, attach welded wire grid or metallic strip reinforcement to welded wire facing with a connection approved by the Department. For temporary geogrid and wire walls, retain shoring backfill at welded wire facing with retention geotextiles and extend geotextiles at least 3 feet back behind facing into backfill.

(D) Preconstruction Meeting

The Engineer may require a shoring preconstruction meeting to discuss the construction, inspection and testing of the temporary shoring. If required, schedule this meeting after all shoring submittals have been accepted. The Resident, District or Bridge Maintenance Engineer, Bridge or Roadway Construction Engineer, Geotechnical Operations Engineer, Contractor and Shoring Contractor Superintendent will attend this preconstruction meeting.

Construction Methods

Control drainage during construction in the vicinity of shoring. Direct run off away from shoring and shoring backfill. Contain and maintain backfill and protect material from erosion.

Install positive protection in accordance with the contract and accepted submittals. Use PCB in accordance with Section 1170 of the *Standard Specifications* and Standard Drawing No. 1170.01. Use temporary guardrail in accordance with Section 862 of the *Standard Specifications* and Standard Drawing No. 862.01, 862.02 and 862.03.

(A) Tolerances

Construct shoring with the following tolerances:

(1) Horizontal wires of welded wire facing are level in all directions,

(2) Shoring location is within 6" of horizontal and vertical alignment shown in the accepted submittals, and

(3) Shoring plumbness (batter) is within 2° of vertical.

(B) Cantilever, Braced and Anchored Shoring Installation

If overexcavation behind cantilever, braced or anchored shoring is shown in the accepted submittals, excavate before installing piles. Otherwise, install piles before excavating for shoring. Install cantilever, braced or anchored shoring in accordance with the construction sequence shown in the accepted submittals. Remove piles and if applicable, timber lagging when shoring is no longer needed.

(1) Pile Installation

Install piles with the minimum required embedment and extension in accordance with Subarticles 450-3(D) and 450-3(E) of the *Standard Specifications* except that a pile

driving equipment data form is not required. Piles may be installed with a vibratory hammer as approved by the Engineer.

Do not splice sheet piles. Use pile excavation to install drilled-in H-piles. After filling holes with grout or concrete to the elevations shown in the accepted submittals, remove any fluids and fill remaining portions of holes with flowable fill. Cure grout or concrete at least 7 days before excavating.

Notify the Engineer if refusal is reached before pile excavation or driven piles attain the minimum required embedment. When this occurs, a revised design submittal may be required.

(2) Excavation

Excavate in front of piles from the top down in accordance with the accepted submittals. For H-piles with timber lagging and braced and anchored shoring, excavate in staged horizontal lifts with a maximum height of 5 ft. Remove flowable fill and material in between H-piles as needed to install timber lagging. Position lagging with at least 3" of contact in the horizontal direction between the lagging and pile flanges. Do not excavate the next lift until timber lagging for the current lift is installed and if applicable, bracing and anchors for the current lift are accepted. Backfill behind cantilever, braced or anchored shoring with shoring backfill.

(3) Anchor Installation

If applicable, install foundations located behind anchored shoring before installing anchors. Fabricate and install ground anchors in accordance with the accepted submittals, Articles 6.4 and 6.5 of the *AASHTO LRFD Bridge Construction Specifications* and the following unless otherwise approved:

(a) Materials in accordance with this provision are required instead of materials conforming to Articles 6.4 and 6.5.3 of the AASHTO LRFD Specifications,

(b) Encapsulation-protected ground anchors in accordance with Article 6.4.1.2 of the AASHTO LRFD specifications are not required, and

(c) Corrosion protection for unbonded lengths of ground anchors and anchorage covers are not required.

Install helical anchors in accordance with the accepted submittals and Anchor Manufacturer's instructions. Measure torque during installation and do not exceed the torsional strength rating of the helical anchor. Attain the minimum required installation torque and penetration before terminating anchor installation. When replacing a helical anchor, embed last helix of the replacement anchor at least 3 helix plate diameters past the location of the first helix of the previous anchor.

(4) Anchor Testing

Proof test and lock-off anchors in accordance with the accepted submittals and Article 6.5.5 of the *AASHTO LRFD Bridge Construction Specifications* except for the acceptance criteria in Article 6.5.5.5. For the AASHTO LRFD specifications, "ground anchor" refers to a ground or helical anchor and "tendon" refers to a bar, strand or shaft.

(a) Anchor Acceptance

Anchor acceptance is based in part on the following criteria.

(i) For ground and helical anchors, total movement is less than 0.04" between the 1 and 10 minute readings or less than 0.08" between the 6 and 60 minute readings.

(ii) For ground anchors, total movement at maximum test load exceeds 80% of the theoretical elastic elongation of the unbonded length.

(b) Anchor Test Results

Submit 2 copies of anchor test records including movement versus load plots for each load increment within 24 hours of completing each row of anchors. The Engineer will review the test records to determine if the anchors are acceptable.

If the Engineer determines an anchor is unacceptable, revise the anchor design or installation methods. Submit a revised anchored shoring design for acceptance and provide an acceptable anchor with the revised design or installation methods. If required, replace the anchor or provide additional anchors with the revised design or installation methods.

(C) Temporary Wall Installation

Excavate as necessary for temporary walls in accordance with the plans and accepted submittals. If applicable, install foundations located in the reinforced zone before placing shoring backfill or reinforcement unless otherwise approved. Notify the Engineer when foundation excavation is complete. Do not place shoring backfill or reinforcement until excavation dimensions and foundation material are approved.

Erect welded wire facing with no negative batter (wall face leaning forward) so the wall position is as shown in the plans and accepted submittals. Set welded wire facing adjacent to each other in the horizontal and vertical direction to completely cover the wall face with facing. Stagger welded wire facing to create a running bond by centering facing over joints in the row below.

Wrap geotextile reinforcement and retention geotextiles behind welded wire facing as shown in the plans and accepted submittals and cover geotextiles with at least 3" of shoring backfill. Overlap adjacent geotextile reinforcement and retention and separation

geotextiles at least 18" with seams oriented perpendicular to the wall face. Hold geotextiles in place with wire staples or anchor pins as needed.

Place reinforcement within 3" of locations shown in the plans and accepted submittals and in slight tension free of kinks, folds, wrinkles or creases. Install reinforcement with the direction shown in the plans and accepted submittals. For temporary wire walls with separate reinforcement and facing components, attach welded wire grid or metallic strip reinforcement to welded wire facing as shown in the accepted submittals. Do not splice or overlap reinforcement so seams are parallel to the wall face. Contact the Engineer when unanticipated existing or future obstructions such as foundations, pavements, pipes, inlets or utilities will interfere with reinforcement.

Place shoring backfill in the reinforced zone in 8" to 10" thick lifts. Compact A-2-4 soil and Class II, Type 1 and Class III select material in accordance with Subarticle 235-3(C) of the *Standard Specifications*. Use only hand operated compaction equipment to compact backfill within 3 feet of welded wire facing. At a distance greater than 3 feet, compact shoring backfill with at least 4 passes of an 8 ton to 10 ton vibratory roller in a direction parallel to the wall face. Smooth wheeled or rubber tired rollers are also acceptable for compacting backfill. Do not use sheepsfoot, grid rollers or other types of compaction equipment with feet. Do not displace or damage reinforcement when placing and compacting shoring backfill. End dumping directly on geotextile or geogrid reinforcement is not permitted. Do not operate heavy equipment on reinforcement until it is covered with at least 8" of shoring backfill. Replace any damaged reinforcement to the satisfaction of the Engineer.

Backfill for temporary walls outside the reinforced zone in accordance with Article 410-8 of the *Standard Specifications*. Bench temporary walls into the sides of excavations where applicable. For temporary geosynthetic walls with top of wall within 5 feet of finished grade, remove top facing and incorporate top reinforcement layer into fill when placing fill in front of wall. Temporary walls remain in place permanently unless otherwise required.

COORDINATION OF LIGHTING WORK

(04-03-07) DB14 R01

Complete the required work as described in the "Lighting" Plans and Specifications, so that lighting is maintained for all areas shown on the plans by either the existing or the proposed lights.

Use care in working around the lights and circuitry and phase operations so that the lighting systems will not be disrupted. Make repairs or replacements in conformance with the "Lighting" Special Provisions. Should the Design-Build Team fail to make such repairs within the time frame allowed, the Department will cause the necessary repairs to be made by others.

ON-THE-JOB TRAINING

(10-16-07) (Rev 6-3-09) Z-10

Description

The North Carolina Department of Transportation will administer a custom version of the Federal On-the-Job Training (OJT) Program, commonly referred to as the Alternate OJT Program. All contractors (existing and newcomers) will be automatically placed in the Alternate Program. Standard OJT requirements typically associated with individual projects will no longer be applied at the project level. Instead, these requirements will be applicable on an annual basis for each contractor administered by the OJT Program Manager.

On the Job Training shall meet the requirements of 23 CFR 230.107 (b), 23 USC – Section 140, this provision and the On-the-Job Training Program Manual.

The Alternate OJT Program will allow a contractor to train employees on Federal, State and privately funded projects located in North Carolina. However, priority must be given to training employees on NCDOT Federal-Aid funded projects.

Minorities and Women

Developing, training and upgrading of minorities and women toward journeymen level status is a primary objective of this special training provision. Accordingly, the Contractor shall make every effort to enroll minority and women as trainees to the extent that such persons are available within a reasonable area of recruitment. This training commitment is not intended, and shall not be used, to discriminate against any applicant for training, whether a member of a minority group or not.

Assessing Training Goals

The Department through the OJT Program Manager, will assign training goals for a calendar year based on the contractors' past three years' activity and the contractors' anticipated upcoming year's activity with the Department. At the beginning of each year, all contractors eligible will be contacted by the Department to determine the number of trainees that will be assigned for the upcoming calendar year. At that time, the Contractor shall enter into an agreement with the Department to provide a self-imposed on-the-job training program for the calendar year. This agreement will include a specific number of annual training goals agreed to by both parties. The number of training assignments may range from 1 to 15 per contractor per calendar year. The Contractor shall sign an agreement to fulfill their annual goal for the year. A sample agreement is available at www.ncdot.org/business/ocs/ojt/.

Training Classifications

The Contractor shall provide on-the-job training aimed at developing full journeyman level workers in the construction craft / operator positions. Preference shall be given to providing training in the following skilled work classifications:

Equipment Operators	Office Engineers
Truck Drivers	Estimators
Carpenters	Iron / Reinforcing Steel Workers
Concrete Finishers	Mechanics
Pipe Layers	Welders

The Department has established common training classifications and their respective training requirements that may be used by the contractors. However, the classifications established are not all-inclusive. Where the training is oriented toward construction applications, training will be allowed in lower-level management positions such as office engineers and estimators. Contractors shall submit new classifications for specific job functions that their employees are performing. The Department will review and recommend for acceptance to FHWA the new classifications proposed by contractors, if applicable. New classifications shall meet the following requirements:

- Proposed training classifications are reasonable and realistic based on the job skill classification needs, and
- The number of training hours specified in the training classification is consistent with common practices and provides enough time for the trainee to obtain journeyman level status.

The Contractor may allow trainees to be trained by a subcontractor provided that the Contractor retains primary responsibility for meeting the training and this provision is made applicable to the subcontract. However, only the Contractor will receive credit towards the annual goal for the trainee.

Where feasible, 25 percent of apprentices or trainees in each occupation shall be in their first year of apprenticeship or training. The number of trainees shall be distributed among the work classifications on the basis of the contractor's needs and the availability of journeymen in the various classifications within a reasonable area of recruitment.

No employee shall be employed as a trainee in any classification in which they have successfully completed a training course leading to journeyman level status or in which they have been employed as a journeyman.

Records and Reports

The Contractor shall maintain enrollment, monthly and completion reports documenting company compliance under these contract documents. These documents and any other information, as requested, shall be submitted to the OJT Program Manager.

Upon completion and graduation of the program, the Contractor shall provide each trainee with a certification Certificate showing the type and length of training satisfactorily completed.

Trainee Interviews

All trainees enrolled in the program shall receive an initial and Trainee / Post graduate interview conducted by the OJT program staff.

Trainee Wages

Contractors shall compensate trainees on a graduating pay scale based upon a percentage of the prevailing minimum journeyman wages (Davis-Bacon Act). Minimum pay shall be as follows:

60 percent	of the journeyman wage for the first half of the training period
75 percent	of the journeyman wage for the third quarter of the training period
90 percent	of the journeyman wage for the last quarter of the training period

In no instance shall a trainee be paid less than the local minimum wage. The Contractor shall adhere to the minimum hourly wage rate that will satisfy both the NCDOL and the Department.

Achieving or Failing to Meet Training Goals

The Contractor will be credited for each trainee employed by him on the contract work who is currently enrolled or becomes enrolled in an approved program and who receives training for at least 50 percent of the specific program requirement. Trainees will be allowed to be transferred between projects if required by the Contractor's scheduled workload to meet training goals.

If a contractor fails to attain their training assignments for the calendar year, they may be taken off the NCDOT's Bidders List.

Measurement and Payment

No compensation will be made for providing required training in accordance with these contract documents.

INTERNATIONAL ROUGHNESS INDEX (IRI) (10-28-11)

The Design-Build Team shall perform smoothness testing of the finished pavement surface for mainline lanes, collector lanes, auxiliary lanes, acceleration and deceleration lanes greater than 1000 feet in length, and ramps / loops in accordance with Article 710-7 of the 2012 *Standard Specifications for Roads and Structures* and as modified herein. The smoothness for all remaining roadways shall be tested in accordance with the *Final Surface Testing - Asphalt Pavements* Standard Special Provision found elsewhere in this RFP.

***** STANDARD SPECIAL PROVISION *****

AVAILABILITY OF FUNDS – TERMINATION OF CONTRACTS

(9-1-11) Z-2

General Statute 143C-6-11. (h) Highway Appropriation is hereby incorporated verbatim in this contract as follows:

"(h) Amounts Encumbered – Transportation project appropriations may be encumbered in the amount of allotments made to the Department of Transportation by the Director for the estimated payments for transportation project contract work to be performed in the appropriation fiscal year. The allotments shall be multiyear allotments and shall be based on estimated revenues and shall be subject to the maximum contract authority contained in *General Statute 143C-6-11(c).* Payment for transportation project work performed pursuant to contract in any fiscal year other than the current fiscal year is subject to appropriations by the General Assembly. Transportation project contracts shall contain a schedule of estimated completion progress, and any acceleration of this progress shall be subject to the approval of the Department of Transportation provided funds are available. The State reserves the right to terminate or suspend any transportation project contract, and any transportation project contract shall be so terminated or suspended if funds will not be available for payment of the work to be performed during that fiscal year pursuant to the contract. In the event of termination of any contract, the contractor shall be given a written notice of termination at least 60 days before completion of scheduled work for which funds are available. In the event of termination, the contractor shall be paid for the work already performed in accordance with the contract specifications."

Payment will be made on any contract terminated pursuant to the special provision in accordance with Article 108-13(E), of the *North Carolina Department of Transportation Standard Specifications for Roads and Structures*, dated January 2012 and as amended by the Standard Special Provision, Division One found elsewhere in this RFP.

This provision applies equally to the NCTA and this project.

***** STANDARD SPECIAL PROVISIONS *****

NCDOT GENERAL SEED SPECIFICATIONS FOR SEED QUALITY

(5-7-11) Z-3

Seed shall be sampled and tested by the North Carolina Department of Agriculture and Consumer Services, Seed Testing Laboratory. When said samples are collected, the vendor shall supply an independent laboratory report for each lot to be tested. Results from seed so sampled shall be final. Seed not meeting the specifications shall be rejected by the Department of Transportation and shall not be delivered to North Carolina Department of Transportation warehouses. If seed has been delivered it shall be available for pickup and replacement at the supplier's expense.

Any re-labeling required by the North Carolina Department of Agriculture and Consumer Services, Seed Testing Laboratory, that would cause the label to reflect as otherwise specified herein shall be rejected by the North Carolina Department of Transportation.

Seed shall be free from seeds of the noxious weeds Johnsongrass, Balloonvine, Jimsonweed, Witchweed, Itchgrass, Serrated Tussock, Showy Crotalaria, Smooth Crotalaria, Sicklepod, Sandbur, Wild Onion, and Wild Garlic. Seed shall not be labeled with the above weed species on the seed analysis label. Tolerances as applied by the Association of Official Seed Analysts will NOT be allowed for the above noxious weeds except for Wild Onion and Wild Garlic.

Tolerances established by the Association of Official Seed Analysts will generally be recognized. However, for the purpose of figuring pure live seed, the found pure seed and found germination percentages as reported by the North Carolina Department of Agriculture and Consumer Services, Seed Testing Laboratory will be used. Allowances, as established by the NCDOT, will be recognized for minimum pure live seed as listed on the following pages.

The specifications for restricted noxious weed seed refers to the number per pound as follows:

Restricted Noxious Weed	Limitations per Lb. of Seed	Restricted Noxious Weed	Limitations per Lb. of Seed
Blessed Thistle	4 seeds	Cornflower (Ragged Robin)	27 seeds
Cocklebur	4 seeds	Texas Panicum	27 seeds
Spurred Anoda	4 seeds	Bracted Plantain	54 seeds
Velvetleaf	4 seeds	Buckhorn Plantain	54 seeds
Morning-glory	8 seeds	Broadleaf Dock	54 seeds
Corn Cockle	10 seeds	Curly Dock	54 seeds
Wild Radish	12 seeds	Dodder	54 seeds
Purple Nutsedge	27 seeds	Giant Foxtail	54 seeds
Yellow Nutsedge	27 seeds	Horsenettle	54 seeds
Canada Thistle	27 seeds	Quackgrass	54 seeds
Field Bindweed	27 seeds	Wild Mustard	54 seeds
Hedge Bindweed	27 seeds		

Seed of Pensacola Bahiagrass shall not contain more than 7% inert matter, Kentucky Bluegrass, Centipede and Fine or Hard Fescue shall not contain more than 5% inert matter whereas a maximum of 2% inert matter will be allowed on all other kinds of seed. In addition, all seed shall not contain more than 2% other crop seed nor more than 1% total weed seed. The germination rate as tested by the North Carolina Department of Agriculture shall not fall below 70%, which includes both dormant and hard seed. Seed shall be labeled with not more than 7%, 5% or 2% inert matter (according to above specifications), 2% other crop seed and 1% total weed seed.

Exceptions may be made for minimum pure live seed allowances when cases of seed variety shortages are verified. Pure live seed percentages will be applied in a verified shortage situation. Those purchase orders of deficient seed lots will be credited with the percentage that the seed is deficient.

FURTHER SPECIFICATIONS FOR EACH SEED GROUP ARE GIVEN BELOW:

Minimum 85% pure live seed; maximum 1% total weed seed; maximum 2% total other crop seed; maximum 144 restricted noxious weed seed per pound. Seed less than 83% pure live seed will not be approved.

Sericea Lespedeza
Oats (seeds)

Minimum 80% pure live seed; maximum 1% total weed seed; maximum 2% total other crop; maximum 144 restricted noxious weed seed per pound. Seed less than 78% pure live seed will not be approved.

Tall Fescue (all approved varieties)
Kobe Lespedeza
Korean Lespedeza
Weeping Lovegrass
Carpetgrass
Bermudagrass
Browntop Millet
German Millet - Strain R
Clover - Red/White/Crimson

Minimum 78% pure live seed; maximum 1% total weed seed; maximum 2% total other crop seed; maximum 144 restricted noxious weed seed per pound. Seed less than 76% pure live seed will not be approved.

Common or Sweet Sundangrass

Minimum 76% pure live seed; maximum 1% total weed seed; maximum 2% total other crop seed; maximum 144 restricted noxious weed seed per pound. Seed less than 74% pure live seed will not be approved.

Rye (grain; all varieties)
Kentucky Bluegrass (all approved varieties)
Hard Fescue (all approved varieties)
Shrub (bicolor) Lespedeza

Minimum 70% pure live seed; maximum 1% total weed seed; maximum 2% total other crop seed; maximum 144 noxious weed seed per pound. Seed less than 70% pure live seed will not be approved.

Centipedegrass
Crownvetch
Pensacola Bahiagrass
Creeping Red Fescue
Japanese Millet
Reed Canary Grass
Zoysia

Minimum 70% pure live seed; maximum 1% total weed seed; maximum 2% total other crop seed; maximum 5% inert matter;maximum 144 restricted noxious weed seed per pound.

Barnyard Grass
Big Bluestem
Little Bluestem
Bristly Locust
Birdsfoot Trefoil
Indiangrass
Orchardgrass
Switchgrass
Yellow Blossom Sweet Clover

STANDARD SPECIAL PROVISION

ERRATA

(1-17-12) (Rev. 01-23-12) Z-4

Revise the *2012 Standard Specifications* as follows:

Division 2

Page 2-7, line 31, Article 215-2 Construction Methods, replace "Article 107-26" with "Article 107-25".

Page 2-17, Article 226-3, Measurement and Payment, line 2, delete "pipe culverts,".

Page 2-20, Subarticle 230-4(B), Contractor Furnished Sources, change references as follows: Line 1, replace "(4) Buffer Zone" with "(c) Buffer Zone"; **Line 12,** replace "(5) Evaluation for Potential Wetlands and Endangered Species" with "(d) Evaluation for Potential Wetlands and Endangered Species"; and **Line 33,** replace "(6) Approval" with "(4) Approval".

Division 6

Page 6-7, line 31, Article 609-3 Field Verification of Mixture and Job Mix Formula Adjustments, replace "30" with "45".

Page 6-10, line 42, Subarticle 609-6(C)(2), replace "Subarticle 609-6(E)" with "Subarticle 609-6(D)".

Page 6-11, Table 609-1 Control Limits, replace "Max. Spec. Limit" for the Target Source of $P_{0.075}/P_{be}$ Ratio with "1.0".

Division 10

Page 10-74, Table 1056-1 Geotextile Requirements, replace "50%" for the UV Stability (Retained Strength) of Type 5 geotextiles with "70%".

Division 12

Page 12-8, Table 1205-4 and 1205-5, replace "THERMOPLASTIC" in the title of these tables with "POLYUREA".

Division 15

Page 15-6, Subarticle 1510-3(B), after line 21, replace the allowable leakage formula with the following:

***** STANDARD SPECIAL PROVISIONS *****

AWARD OF CONTRACT
(6-28-77) Z-6

"The North Carolina Department of Transportation, in accordance with the provisions of *Title VI of the Civil Rights Act of 1964* (78 Stat. 252) and the Regulations of the Department of Transportation (*49 C.F.R., Part 21*), issued pursuant to such act, hereby notifies all bidders that it will affirmatively insure that the contract entered into pursuant to this advertisement will be awarded to the lowest responsible bidder without discrimination on the ground of race, color, or national origin".

***** STANDARD SPECIAL PROVISIONS *****

MINORITY AND FEMALE EMPLOYMENT REQUIREMENTS

(12-18-07) Z-7

NOTICE OF REQUIREMENTS FOR AFFIRMATIVE ACTION TO ENSURE EQUAL EMPLOYMENT OPPORTUNITY (*EXECUTIVE NUMBER 11246*)

1. The goals and timetables for minority and female participation, expressed in percentage terms for the Contractor's aggregate workforce in each trade on all construction work in the covered area, see as shown on the attached sheet entitled "Employment Goals for Minority and Female Participation".

These goals are applicable to all the Contractor's construction work (whether or not it is Federal or federally assisted) performed in the covered area. If the Contractor performs construction work in a geographical area located outside of the covered area, it shall apply the goals established for such geographical area where the work is actually performed. With regard to this second area, the Contractor also is subject to the goals for both its federally involved and nonfederally involved construction.

The Contractor's compliance with the Executive Order and the regulations in *41 CFR Part 60-4* shall be based on its implementation of the Equal Opportunity Clause, specific affirmative action obligations required by the specifications set forth in *41 CFR 60-4.3(a)*, and its effort to meet the goals. The hours of minority and female employment and training must be substantially uniform throughout the length of the contract, and in each trade and the Contractor shall make a good faith effort to employ minorities and women evenly on each of its projects. The transfer of minority or female employees or trainees from Contractor to Contractor or from project to project or the sole purpose of meeting the Contractor's goals shall be a violation of the contract, the executive Order and the regulations *in 41 CFR Part 60-4*. Compliance with the goals will be measured against the total work hours performed.

2. As used in this Notice and in the contract resulting from this solicitation, the "covered area" is the county or counties shown on the cover sheet of the proposal form and contract.

EMPLOYMENT GOALS FOR MINORITY AND FEMALE PARTICIPATION

Economic Areas

Area 023 29.7%
Bertie County
Camden County
Chowan County
Gates County
Hertford County
Pasquotank County
Perquimans County

Area 024 31.7%
Beaufort County
Carteret County
Craven County
Dare County
Edgecombe County
Green County
Halifax County
Hyde County
Jones County
Lenoir County
Martin County
Nash County
Northampton County
Pamlico County
Pitt County
Tyrrell County
Washington County
Wayne County
Wilson County

Area 025 23.5%
Columbus County
Duplin County
Onslow County
Pender County

Area 026 33.5%
Bladen County
Hoke County
Richmond County
Robeson County
Sampson County
Scotland County

Area 027 24.7%
Chatham County
Franklin County
Granville County
Harnett County
Johnston County
Lee County
Person County
Vance County
Warren County

Area 028 15.5%
Alleghany County
Ashe County
Caswell County
Davie County
Montgomery County
Moore County
Rockingham County
Surry County
Watauga County
Wilkes County

Area 029 15.7%
Alexander County
Anson County
Burke County
Cabarrus County
Caldwell County
Catawba County
Cleveland County
Iredell County
Lincoln County
Polk County
Rowan County
Rutherford County
Stanly County

Area 0480 8.5%
Buncombe County
Madison County

Area 030 6.3%
Avery County
Cherokee County
Clay County
Graham County
Haywood County
Henderson County
Jackson County
McDowell County
Macon County
Mitchell County
Swain County
Transylvania County
Yancey County

SMSA Areas

Area 5720 26.6%
Currituck County

Area 9200 20.7%
Brunswick County
New Hanover County

Area 2560 24.2%
Cumberland County

Area 6640 22.8%
Durham County
Orange County
Wake County

Area 1300 16.2%
Alamance County

Area 3120 16.4%
Davidson County
Forsyth County
Guilford County
Randolph County
Stokes County
Yadkin County

Area 1520 18.3%
Gaston County
Mecklenburg County
Union County

Goals for Female

Participation in Each Trade

(Statewide) 6.9%

*** STANDARD SPECIAL PROVISIONS ***

REQUIRED CONTRACT PROVISIONS FEDERAL-AID CONSTRUCTION CONTRACTS (FHWA-1273)

I. General
II. Nondiscrimination
III. Nonsegregated Facilities
IV. Payment of Predetermined Minimum Wage
V. Statements and Payrolls
VI. Record of Materials, Supplies, and Labor
VII. Subletting or Assigning the Contract
VIII. Safety: Accident Prevention
IX. False Statements Concerning Highway Projects
X. Implementation of Clean Air Act and Federal Water Pollution Control Act
XI. Certification Regarding Debarment, Suspension Ineligibility, and Voluntary Exclusion
XII. Certification Regarding Use of Contract Funds for Lobbying

I. GENERAL

1. These contract provisions shall apply to all work performed on the contract by the contractor's own organization and with the assistance of workers under the contractor's immediate superintendence and to all work performed on the contract by piecework, station work, or by subcontract.
2. Except as otherwise provided for in each section, the contractor shall insert in each subcontract all of the stipulations contained in these Required Contract Provisions, and further require their inclusion in any lower tier subcontract or purchase order that may in turn be made. The Required Contract Provisions shall not be incorporated by reference in any case. The prime contractor shall be responsible for compliance by any subcontractor or lower tier subcontractor with these Required Contract Provisions.
3. A breach of any of the stipulations contained in these Required Contract Provisions shall be sufficient grounds for termination of the contract.
4. A breach of the following clauses of the Required Contract Provisions may also be grounds for debarment as provided in 29 CFR 5.12:

   Section I, paragraph 2;

   Section IV, paragraphs 1, 2, 3, 4, and 7;

   Section V, paragraphs 1 and 2a through 2g.
5. Disputes arising out of the labor standards provisions of Section IV (except paragraph 5) and Section V of these Required Contract Provisions shall not be subject to the general disputes clause of this contract. Such disputes shall be resolved in accordance with the procedures of the U.S. Department of Labor (DOL) as set forth in 29 CFR 5, 6, and 7. Disputes within the meaning of this clause include disputes between the contractor (or any of its subcontractors) and the contracting agency, the DOL, or the contractor's employees or their representatives.
6. **Selection of Labor:** During the performance of this contract, the contractor shall not:
   a. discriminate against labor from any other State, possession, or territory of the United States (except for employment preference for Appalachian contracts, when applicable, as specified in Attachment A), or
   b. employ convict labor for any purpose within the limits of the project unless it is labor performed by convicts who are on parole, supervised release, or probation.

II. NONDISCRIMINATION

(Applicable to all Federal-aid construction contracts and to all related subcontracts of $10,000 or more.)

1. **Equal Employment Opportunity:** Equal employment opportunity (EEO) requirements not to discriminate and to take affirmative action to assure equal opportunity as set forth under laws, executive orders, rules, regulations (28 CFR 35, 29 CFR 1630 and 41 CFR 60) and orders of the Secretary of Labor as modified by the provisions prescribed herein, and imposed pursuant to 23 U.S.C. 140 shall constitute the EEO and specific affirmative action standards for the contractor's project activities under this contract. The Equal Opportunity Construction Contract Specifications set forth under 41 CFR 60-4.3 and the provisions of the American Disabilities Act of 1990 (42 U.S.C. 12101 et seq.) set forth under 28 CFR 35 and 29 CFR 1630 are incorporated by reference in this contract. In the execution of this contract, the contractor agrees to comply with the following minimum specific requirement activities of EEO:
   a. The contractor will work with the State highway agency (SHA) and the Federal Government in carrying out EEO obligations and in their review of his/her activities under the contract.

b. The contractor will accept as his operating policy the following statement:

> "It is the policy of this Company to assure that applicants are employed, and that employees are treated during employment, without regard to their race, religion, sex, color, national origin, age or disability. Such action shall include: employment, upgrading, demotion, or transfer; recruitment or recruitment advertising; layoff or termination; rates of pay or other forms of compensation; and selection for training, including apprenticeship, preapprenticeship, and/or on-the-job training."

2. **EEO Officer:** The contractor will designate and make known to the SHA contracting officers an EEO Officer who will have the responsibility for and must be capable of effectively administering and promoting an active contractor program of EEO and who must be assigned adequate authority and responsibility to do so.

3. **Dissemination of Policy:** All members of the contractor's staff who are authorized to hire, supervise, promote, and discharge employees, or who recommend such action, or who are substantially involved in such action, will be made fully cognizant of, and will implement, the contractor's EEO policy and contractual responsibilities to provide EEO in each grade and classification of employment. To ensure that the above agreement will be met, the following actions will be taken as a minimum:

   a. Periodic meetings of supervisory and personnel office employees will be conducted before the start of work and then not less often than once every six months, at which time the contractor's EEO policy and its implementation will be reviewed and explained. The meetings will be conducted by the EEO Officer.

   b. All new supervisory or personnel office employees will be given a thorough indoctrination by the EEO Officer, covering all major aspects of the contractor's EEO obligations within thirty days following their reporting for duty with the contractor.

   c. All personnel who are engaged in direct recruitment for the project will be instructed by the EEO Officer in the contractor's procedures for locating and hiring minority group employees.

   d. Notices and posters setting forth the contractor's EEO policy will be placed in areas readily accessible to employees, applicants for employment and potential employees.

   e. The contractor's EEO policy and the procedures to implement such policy will be brought to the attention of employees by means of meetings, employee handbooks, or other appropriate means.

4. **Recruitment:** When advertising for employees, the contractor will include in all advertisements for employees the notation: "An Equal Opportunity Employer." All such advertisements will be placed in publications having a large circulation among minority groups in the area from which the project work force would normally be derived.

   a. The contractor will, unless precluded by a valid bargaining agreement, conduct systematic and direct recruitment through public and private employee referral sources likely to yield qualified minority group applicants. To meet this requirement, the contractor will identify sources of potential minority group employees, and establish with such identified sources procedures whereby minority group applicants may be referred to the contractor for employment consideration.

   b. In the event the contractor has a valid bargaining agreement providing for exclusive hiring hall referrals, he is expected to observe the provisions of that agreement to the extent that the system permits the contractor's compliance with EEO contract provisions. (The DOL has held that where implementation of such agreements have the effect of discriminating against minorities or women, or obligates the contractor to do the same, such implementation violates Executive Order 11246, as amended.)

   c. The contractor will encourage his present employees to refer minority group applicants for employment. Information and procedures with regard to referring minority group applicants will be discussed with employees.

5. **Personnel Actions:** Wages, working conditions, and employee benefits shall be established and administered, and personnel actions of every type, including hiring, upgrading, promotion, transfer, demotion, layoff, and termination, shall be taken without regard to race, color, religion, sex, national origin, age or disability. The following procedures shall be followed:

   a. The contractor will conduct periodic inspections of project sites to insure that working conditions and employee facilities do not indicate discriminatory treatment of project site personnel.

   b. The contractor will periodically evaluate the spread of wages paid within each classification to determine any evidence of discriminatory wage practices.

   c. The contractor will periodically review selected personnel actions in depth to determine whether there is evidence of discrimination. Where evidence is found, the contractor will promptly take corrective action. If the review indicates that the discrimination may extend beyond the actions reviewed, such corrective action shall include all affected persons.

   d. The contractor will promptly investigate all complaints of alleged discrimination made to the contractor in connection with his obligations under this contract, will attempt to resolve such complaints, and will take appropriate corrective action within a reasonable time. If the investigation indicates that the discrimination may affect persons other than the complainant, such corrective action shall include such other persons. Upon completion of each investigation, the contractor will inform every complainant of all of his avenues of appeal.

6. **Training and Promotion:**

   a. The contractor will assist in locating, qualifying, and increasing the skills of minority group and women employees, and applicants for employment.

   b. Consistent with the contractor's work force requirements and as permissible under Federal and State regulations, the contractor shall make full use of training programs, i.e., apprenticeship, and on-the-job training programs for the geographical area of contract performance. Where feasible, 25 percent of apprentices or trainees in each occupation shall be in their first year of apprenticeship or training. In the event a special provision for training is provided under this contract, this subparagraph will be superseded as indicated in the special provision.

c. The contractor will advise employees and applicants for employment of available training programs and entrance requirements for each.

d. The contractor will periodically review the training and promotion potential of minority group and women employees and will encourage eligible employees to apply for such training and promotion.

7. **Unions:** If the contractor relies in whole or in part upon unions as a source of employees, the contractor will use his/her best efforts to obtain the cooperation of such unions to increase opportunities for minority groups and women within the unions, and to effect referrals by such unions of minority and female employees. Actions by the contractor either directly or through a contractor's association acting as agent will include the procedures set forth below:

a. The contractor will use best efforts to develop, in cooperation with the unions, joint training programs aimed toward qualifying more minority group members and women for membership in the unions and increasing the skills of minority group employees and women so that they may qualify for higher paying employment.

b. The contractor will use best efforts to incorporate an EEO clause into each union agreement to the end that such union will be contractually bound to refer applicants without regard to their race, color, religion, sex, national origin, age or disability.

c. The contractor is to obtain information as to the referral practices and policies of the labor union except that to the extent such information is within the exclusive possession of the labor union and such labor union refuses to furnish such information to the contractor, the contractor shall so certify to the SHA and shall set forth what efforts have been made to obtain such information.

d. In the event the union is unable to provide the contractor with a reasonable flow of minority and women referrals within the time limit set forth in the collective bargaining agreement, the contractor will, through independent recruitment efforts, fill the employment vacancies without regard to race, color, religion, sex, national origin, age or disability; making full efforts to obtain qualified and/or qualifiable minority group persons and women. (The DOL has held that it shall be no excuse that the union with which the contractor has a collective bargaining agreement providing for exclusive referral failed to refer minority employees.) In the event the union referral practice prevents the contractor from meeting the obligations pursuant to Executive Order 11246, as amended, and these special provisions, such contractor shall immediately notify the SHA.

8. **Selection of Subcontractors, Procurement of Materials and Leasing of Equipment:** The contractor shall not discriminate on the grounds of race, color, religion, sex, national origin, age or disability in the selection and retention of subcontractors, including procurement of materials and leases of equipment.

a. The contractor shall notify all potential subcontractors and suppliers of his/her EEO obligations under this contract.

b. Disadvantaged business enterprises (DBE), as defined in 49 CFR 23, shall have equal opportunity to compete for and perform subcontracts which the contractor enters into pursuant to this contract. The contractor will use his best efforts to solicit bids from and to utilize DBE subcontractors or subcontractors with meaningful minority group and female representation among their employees. Contractors shall obtain lists of DBE construction firms from SHA personnel.

c. The contractor will use his best efforts to ensure subcontractor compliance with their EEO obligations.

9. **Records and Reports:** The contractor shall keep such records as necessary to document compliance with the EEO requirements. Such records shall be retained for a period of three years following completion of the contract work and shall be available at reasonable times and places for inspection by authorized representatives of the SHA and the FHWA.

a. The records kept by the contractor shall document the following:

1. The number of minority and non-minority group members and women employed in each work classification on the project;

2. The progress and efforts being made in cooperation with unions, when applicable, to increase employment opportunities for minorities and women;

3. The progress and efforts being made in locating, hiring, training, qualifying, and upgrading minority and female employees; and

4. The progress and efforts being made in securing the services of DBE subcontractors or subcontractors with meaningful minority and female representation among their employees.

b. The contractors will submit an annual report to the SHA each July for the duration of the project, indicating the number of minority, women, and non-minority group employees currently engaged in each work classification required by the contract work. This information is to be reported on Form FHWA-1391. If on-the-job training is being required by special provision, the contractor will be required to collect and report training data.

III. **NONSEGREGATED FACILITIES**

(Applicable to all Federal-aid construction contracts and to all related subcontracts of $10,000 or more.)

a. By submission of this bid, the execution of this contract or subcontract, or the consummation of this material supply agreement or purchase order, as appropriate, the bidder, Federal-aid construction contractor, subcontractor, material supplier, or vendor, as appropriate, certifies that the firm does not maintain or provide for its employees any segregated facilities at any of its establishments, and that the firm does not permit its employees to perform their services at any location, under its control, where segregated facilities are maintained. The firm agrees that a breach of this certification is a violation of the EEO provisions of this contract. The firm further certifies that no employee will be denied access to adequate facilities on the basis of sex or disability.

b. As used in this certification, the term "segregated facilities" means any waiting rooms, work areas, restrooms and washrooms, restaurants and other eating areas, timeclocks, locker rooms, and other storage or dressing areas, parking lots, drinking fountains, recreation or entertainment areas, transportation, and housing facilities provided for employees which are segregated by explicit directive, or are, in fact, segregated on the basis of race, color, religion, national origin, age or disability, because of habit, local custom, or otherwise. The only exception will be for the disabled when the demands for accessibility override (e.g. disabled parking).

c. The contractor agrees that it has obtained or will obtain identical certification from proposed subcontractors or material suppliers prior to award of subcontracts or consummation of material supply agreements of $10,000 or more and that it will retain such certifications in its files.

IV. **PAYMENT OF PREDETERMINED MINIMUM WAGE**

(Applicable to all Federal-aid construction contracts exceeding $2,000 and to all related subcontracts, except for projects located on roadways classified as local roads or rural minor collectors, which are exempt.)

1. **General:**

a. All mechanics and laborers employed or working upon the site of the work will be paid unconditionally and not less often than once a week and without subsequent deduction or rebate on any account [except such payroll deductions as are permitted by regulations (29 CFR 3) issued by the Secretary of Labor under the Copeland Act (40 U.S.C. 276c)] the full amounts of wages and bona fide fringe benefits (or cash equivalents thereof) due at time of payment. The payment shall be computed at wage rates not less than those contained in the wage determination of the Secretary of Labor (hereinafter "the wage determination") which is attached hereto and made a part hereof, regardless of any contractual relationship which may be alleged to exist between the contractor or its subcontractors and such laborers and mechanics. The wage determination (including any additional classifications and wage rates conformed under paragraph 2 of this Section IV and the DOL poster (WH-1321) or Form FHWA-1495) shall be posted at all times by the contractor and its subcontractors at the site of the work in a prominent and accessible place where it can be easily seen by the workers. For the purpose of this Section, contributions made or costs reasonably anticipated for bona fide fringe benefits under Section 1(b)(2) of the Davis-Bacon Act (40 U.S.C. 276a) on behalf of laborers or mechanics are considered wages paid to such laborers or mechanics, subject to the provisions of Section IV, paragraph 3b, hereof. Also, for the purpose of this Section, regular contributions made or costs incurred for more than a weekly period (but not less often than quarterly) under plans, funds, or programs, which cover the particular weekly period, are deemed to be constructively made or incurred during such weekly period. Such laborers and mechanics shall be paid the appropriate wage rate and fringe benefits on the wage determination for the classification of work actually performed, without regard to skill, except as provided in paragraphs 4 and 5 of this Section IV.

b. Laborers or mechanics performing work in more than one classification may be compensated at the rate specified for each classification for the time actually worked therein, provided, that the employer's payroll records accurately set forth the time spent in each classification in which work is performed.

c. All rulings and interpretations of the Davis-Bacon Act and related acts contained in 29 CFR 1, 3, and 5 are herein incorporated by reference in this contract.

2. **Classification:**

a. The SHA contracting officer shall require that any class of laborers or mechanics employed under the contract, which is not listed in the wage determination, shall be classified in conformance with the wage determination.

b. The contracting officer shall approve an additional classification, wage rate and fringe benefits only when the following criteria have been met:

1. the work to be performed by the additional classification requested is not performed by a classification in the wage determination;

2. the additional classification is utilized in the area by the construction industry;

3. the proposed wage rate, including any bona fide fringe benefits, bears a reasonable relationship to the wage rates contained in the wage determination; and

4. with respect to helpers, when such a classification prevails in the area in which the work is performed.

c. If the contractor or subcontractors, as appropriate, the laborers and mechanics (if known) to be employed in the additional classification or their representatives, and the contracting officer agree on the classification and wage rate (including the amount designated for fringe benefits where appropriate), a report of the action taken shall be sent by the contracting officer to the DOL, Administrator of the Wage and Hour Division, Employment Standards Administration, Washington, D.C. 20210. The Wage and Hour Administrator, or an authorized representative, will approve, modify, or disapprove every additional classification action within 30 days of receipt and so advise the contracting officer or will notify the contracting officer within the 30-day period that additional time is necessary.

d. In the event the contractor or subcontractors, as appropriate, the laborers or mechanics to be employed in the additional classification or their representatives, and the contracting officer do not agree on the proposed classification and wage rate (including the amount designated for fringe benefits, where appropriate), the contracting officer shall refer the questions, including the views of all interested parties and the recommendation of the contracting officer, to the Wage and Hour Administrator for determination. Said Administrator, or an authorized representative, will issue a determination within 30 days of receipt and so advise the contracting officer or will notify the contracting officer within the 30-day period that additional time is necessary

e. The wage rate (including fringe benefits where appropriate) determined pursuant to paragraph 2c or 2d of this Section IV shall be paid to all workers performing work in the additional classification from the first day on which work is performed in the classification.

3. **Payment of Fringe Benefits:**

a. Whenever the minimum wage rate prescribed in the contract for a class of laborers or mechanics includes a fringe benefit which is not expressed as an hourly rate, the contractor or subcontractors, as appropriate, shall either pay the benefit as stated in the wage determination or shall pay another bona fide fringe benefit or an hourly case equivalent thereof.

b. If the contractor or subcontractor, as appropriate, does not make payments to a trustee or other third person, he/she may consider as a part of the wages of any laborer or mechanic the amount of any costs reasonably anticipated in providing bona fide fringe benefits under a plan or program, provided, that the Secretary of Labor has found, upon the written request of the contractor, that the applicable standards of the Davis-Bacon Act have been met. The Secretary of Labor may require the contractor to set aside in a separate account assets for the meeting of obligations under the plan or program.

4. **Apprentices and Trainees (Programs of the U.S. DOL) and Helpers:**

a. Apprentices:

1. Apprentices will be permitted to work at less than the predetermined rate for the work they performed when they are employed pursuant to and individually registered in a bona fide apprenticeship program registered with the DOL, Employment and Training Administration, Bureau of Apprenticeship and Training, or with a State apprenticeship agency recognized by the Bureau, or if a person is employed in his/her first 90 days of probationary employment as an apprentice in such an apprenticeship program, who is not individually registered in the program, but who has been certified by the Bureau of Apprenticeship and Training or a State apprenticeship agency (where appropriate) to be eligible for probationary employment as an apprentice.

2. The allowable ratio of apprentices to journeyman-level employees on the job site in any craft classification shall not be greater than the ratio permitted to the contractor as to the entire work force under the registered program. Any employee listed on a payroll at an apprentice wage rate, who is not registered or otherwise employed as stated above, shall be paid not less than the applicable wage rate listed in the wage determination for the classification of work actually performed. In addition, any apprentice performing work on the job site in excess of the ratio permitted under the registered program shall be paid not less than the applicable wage rate on the wage determination for the work actually performed. Where a contractor or subcontractor is performing construction on a project in a locality other than that in which its program is registered, the ratios and wage rates (expressed in percentages of the journeyman-level hourly rate) specified in the contractor's or subcontractor's registered program shall be observed.

3. Every apprentice must be paid at not less than the rate specified in the registered program for the apprentice's level of progress, expressed as a percentage of the journeyman-level hourly rate specified in the applicable wage determination. Apprentices shall be paid fringe benefits in accordance with the provisions of the apprenticeship program. If the apprenticeship program does not specify fringe benefits, apprentices must be paid the full amount of fringe benefits listed on the wage determination for the applicable classification. If the Administrator for the Wage and Hour Division determines that a different practice prevails for the applicable apprentice classification, fringes shall be paid in accordance with that determination.

4. In the event the Bureau of Apprenticeship and Training, or a State apprenticeship agency recognized by the Bureau, withdraws approval of an apprenticeship program, the contractor or subcontractor will no longer be permitted to utilize apprentices at less than the applicable predetermined rate for the comparable work performed by regular employees until an acceptable program is approved.

b. Trainees:

1. Except as provided in 29 CFR 5.16, trainees will not be permitted to work at less than the predetermined rate for the work performed unless they are employed pursuant to and individually registered in a program which has received prior approval, evidenced by formal certification by the DOL, Employment and Training Administration.

2. The ratio of trainees to journeyman-level employees on the job site shall not be greater than permitted under the plan approved by the Employment and Training Administration. Any employee listed on the payroll at a trainee rate who is not registered and participating in a training plan approved by the Employment and Training Administration shall be paid not less than the applicable wage rate on the wage determination for the classification of work actually performed. In addition, any trainee performing work on the job site in excess of the ratio permitted under the registered program shall be paid not less than the applicable wage rate on the wage determination for the work actually performed.

3. Every trainee must be paid at not less than the rate specified in the approved program for his/her level of progress, expressed as a percentage of the journeyman-level hourly rate specified in the applicable wage determination. Trainees shall be paid fringe benefits in accordance with the provisions of the trainee program. If the trainee program does not mention fringe benefits, trainees shall be paid the full amount of fringe benefits listed on the wage determination unless the Administrator of the Wage and Hour Division determines that there is an apprenticeship program associated with the corresponding journeyman-level wage rate on the wage determination which provides for less than full fringe benefits for apprentices, in which case such trainees shall receive the same fringe benefits as apprentices.

4. In the event the Employment and Training Administration withdraws approval of a training program, the contractor or subcontractor will no longer be permitted to utilize trainees at less than the applicable predetermined rate for the work performed until an acceptable program is approved.

c. Helpers:

Helpers will be permitted to work on a project if the helper classification is specified and defined on the applicable wage determination or is approved pursuant to the conformance procedure set forth in Section IV.2. Any worker listed on a payroll at a helper wage rate, who is not a helper under a approved definition, shall be paid not less than the applicable wage rate on the wage determination for the classification of work actually performed.

5. **Apprentices and Trainees (Programs of the U.S. DOT):**

Apprentices and trainees working under apprenticeship and skill training programs which have been certified by the Secretary of Transportation as promoting EEO in connection with Federal-aid highway construction programs are not subject to the requirements

of paragraph 4 of this Section IV. The straight time hourly wage rates for apprentices and trainees under such programs will be established by the particular programs. The ratio of apprentices and trainees to journeymen shall not be greater than permitted by the terms of the particular program.

6. **Withholding:**

The SHA shall upon its own action or upon written request of an authorized representative of the DOL withhold, or cause to be withheld, from the contractor or subcontractor under this contract or any other Federal contract with the same prime contractor, or any other Federally-assisted contract subject to Davis-Bacon prevailing wage requirements which is held by the same prime contractor, as much of the accrued payments or advances as may be considered necessary to pay laborers and mechanics, including apprentices, trainees, and helpers, employed by the contractor or any subcontractor the full amount of wages required by the contract. In the event of failure to pay any laborer or mechanic, including any apprentice, trainee, or helper, employed or working on the site of the work, all or part of the wages required by the contract, the SHA contracting officer may, after written notice to the contractor, take such action as may be necessary to cause the suspension of any further payment, advance, or guarantee of funds until such violations have ceased.

7. **Overtime Requirements:**

No contractor or subcontractor contracting for any part of the contract work which may require or involve the employment of laborers, mechanics, watchmen, or guards (including apprentices, trainees, and helpers described in paragraphs 4 and 5 above) shall require or permit any laborer, mechanic, watchman, or guard in any workweek in which he/she is employed on such work, to work in excess of 40 hours in such workweek unless such laborer, mechanic, watchman, or guard receives compensation at a rate not less than one-and-one-half times his/her basic rate of pay for all hours worked in excess of 40 hours in such workweek.

8. **Violation:**

Liability for Unpaid Wages; Liquidated Damages: In the event of any violation of the clause set forth in paragraph 7 above, the contractor and any subcontractor responsible thereof shall be liable to the affected employee for his/her unpaid wages. In addition, such contractor and subcontractor shall be liable to the United States (in the case of work done under contract for the District of Columbia or a territory, to such District or to such territory) for liquidated damages. Such liquidated damages shall be computed with respect to each individual laborer, mechanic, watchman, or guard employed in violation of the clause set forth in paragraph 7, in the sum of $10 for each calendar day on which such employee was required or permitted to work in excess of the standard work week of 40 hours without payment of the overtime wages required by the clause set forth in paragraph 7.

9. **Withholding for Unpaid Wages and Liquidated Damages:**

The SHA shall upon its own action or upon written request of any authorized representative of the DOL withhold, or cause to be withheld, from any monies payable on account of work performed by the contractor or subcontractor under any such contract or any other Federal contract with the same prime contractor, or any other Federally-assisted contract subject to the Contract Work Hours and Safety Standards Act, which is held by the same prime contractor, such sums as may be determined to be necessary to satisfy any liabilities of such contractor or subcontractor for unpaid wages and liquidated damages as provided in the clause set forth in paragraph 8 above.

V. **STATEMENTS AND PAYROLLS**

(Applicable to all Federal-aid construction contracts exceeding $2,000 and to all related subcontracts, except for projects located on roadways classified as local roads or rural collectors, which are exempt.)

1. **Compliance with Copeland Regulations (29 CFR 3):**

The contractor shall comply with the Copeland Regulations of the Secretary of Labor which are herein incorporated by reference.

2. **Payrolls and Payroll Records:**

a. Payrolls and basic records relating thereto shall be maintained by the contractor and each subcontractor during the course of the work and preserved for a period of 3 years from the date of completion of the contract for all laborers, mechanics, apprentices, trainees, watchmen, helpers, and guards working at the site of the work.

b. The payroll records shall contain the name, social security number, and address of each such employee; his or her correct classification; hourly rates of wages paid (including rates of contributions or costs anticipated for bona fide fringe benefits or cash equivalent thereof the types described in Section 1(b)(2)(B) of the Davis Bacon Act); daily and weekly number of hours worked; deductions made; and actual wages paid. In addition, for Appalachian contracts, the payroll records shall contain a notation indicating whether the employee does, or does not, normally reside in the labor area as defined in Attachment A, paragraph 1. Whenever the Secretary of Labor, pursuant to Section IV, paragraph 3b, has found that the wages of any laborer or mechanic include the amount of any costs reasonably anticipated in providing benefits under a plan or program described in Section 1(b)(2)(B) of the Davis Bacon Act, the contractor and each subcontractor shall maintain records which show that the commitment to provide such benefits is enforceable, that the plan or program is financially responsible, that the plan or program has been communicated in writing to the laborers or mechanics affected, and show the cost anticipated or the actual cost incurred in providing benefits. Contractors or subcontractors employing apprentices or trainees under approved programs shall maintain written evidence of the registration of apprentices and trainees, and ratios and wage rates prescribed in the applicable programs.

c. Each contractor and subcontractor shall furnish, each week in which any contract work is performed, to the SHA resident engineer a payroll of wages paid each of its employees (including apprentices, trainees, and helpers, described in Section IV, paragraphs 4 and 5, and watchmen and guards engaged on work during the preceding weekly payroll period). The payroll submitted shall set out accurately and completely all of the information required to be maintained under paragraph 2b of this Section V. This information may be submitted in any form desired. Optional Form WH-347 is available for this purpose and may be purchased from the Superintendent of Documents (Federal stock number 029-005-0014-1), U.S. Government Printing

Office, Washington, D.C. 20402. The prime contractor is responsible for the submission of copies of payrolls by all subcontractors.

d. Each payroll submitted shall be accompanied by a "Statement of Compliance," signed by the contractor or subcontractor or his/her agent who pays or supervises the payment of the persons employed under the contract and shall certify the following:

1. that the payroll for the payroll period contains the information required to be maintained under paragraph 2b of this Section V and that such information is correct and complete;

2. that such laborer or mechanic (including each helper, apprentice, and trainee) employed on the contract during the payroll period has been paid the full weekly wages earned, without rebate, either directly or indirectly, and that no deductions have been made either directly or indirectly from the full wages earned, other than permissible deductions as set forth in the Regulations, 29 CFR 3;

3. that each laborer or mechanic has been paid not less that the applicable wage rate and fringe benefits or cash equivalent for the classification of worked performed, as specified in the applicable wage determination incorporated into the contract.

e. The weekly submission of a properly executed certification set forth on the reverse side of Optional Form WH-347 shall satisfy the requirement for submission of the "Statement of Compliance" required by paragraph 2d of this Section V.

f. The falsification of any of the above certifications may subject the contractor to civil or criminal prosecution under 18 U.S.C. 1001 and 31 U.S.C. 231.

g. The contractor or subcontractor shall make the records required under paragraph 2b of this Section V available for inspection, copying, or transcription by authorized representatives of the SHA, the FHWA, or the DOL, and shall permit such representatives to interview employees during working hours on the job. If the contractor or subcontractor fails to submit the required records or to make them available, the SHA, the FHWA, the DOL, or all may, after written notice to the contractor, sponsor, applicant, or owner, take such actions as may be necessary to cause the suspension of any further payment, advance, or guarantee of funds. Furthermore, failure to submit the required records upon request or to make such records available may be grounds for debarment action pursuant to 29 CFR 5.12.

VI. **RECORD OF MATERIALS, SUPPLIES, AND LABOR THIS SECTION DELETED JUNE 4, 2007.**

VII. **SUBLETTING OR ASSIGNING THE CONTRACT**

1. The contractor shall perform with its own organization contract work amounting to not less than 30 percent (or a greater percentage if specified elsewhere in the contract) of the total original contract price, excluding any specialty items designated by the State. Specialty items may be performed by subcontract and the amount of any such specialty items performed may be deducted from the total original contract price before computing the amount of work required to be performed by the contractor's own organization (23 CFR 635).

a. "Its own organization" shall be construed to include only workers employed and paid directly by the prime contractor and equipment owned or rented by the prime contractor, with or without operators. Such term does not include employees or equipment of a subcontractor, assignee, or agent of the prime contractor.

b. "Specialty Items" shall be construed to be limited to work that requires highly specialized knowledge, abilities, or equipment not ordinarily available in the type of contracting organizations qualified and expected to bid on the contract as a whole and in general are to be limited to minor components of the overall contract.

2. The contract amount upon which the requirements set forth in paragraph 1 of Section VII is computed includes the cost of material and manufactured products which are to be purchased or produced by the contractor under the contract provisions.

3. The contractor shall furnish (a) a competent superintendent or supervisor who is employed by the firm, has full authority to direct performance of the work in accordance with the contract requirements, and is in charge of all construction operations (regardless of who performs the work) and (b) such other of its own organizational resources (supervision, management, and engineering services) as the SHA contracting officer determines is necessary to assure the performance of the contract.

4. No portion of the contract shall be sublet, assigned or otherwise disposed of except with the written consent of the SHA contracting officer, or authorized representative, and such consent when given shall not be construed to relieve the contractor of any responsibility for the fulfillment of the contract. Written consent will be given only after the SHA has assured that each subcontract is evidenced in writing and that it contains all pertinent provisions and requirements of the prime contract.

VIII. **SAFETY: ACCIDENT PREVENTION**

1. In the performance of this contract the contractor shall comply with all applicable Federal, State, and local laws governing safety, health, and sanitation (23 CFR 635). The contractor shall provide all safeguards, safety devices and protective equipment and take any other needed actions as it determines, or as the SHA contracting officer may determine, to be reasonably necessary to protect the life and health of employees on the job and the safety of the public and to protect property in connection with the performance of the work covered by the contract.

2. It is a condition of this contract, and shall be made a condition of each subcontract, which the contractor enters into pursuant to this contract, that the contractor and any subcontractor shall not permit any employee, in performance of the contract, to work in surroundings or under conditions which are unsanitary, hazardous or dangerous to his/her health or safety, as determined under construction safety and health standards (29 CFR 1926) promulgated by the Secretary of Labor, in accordance with Section 107 of the Contract Work Hours and Safety Standards Act (40 U.S.C. 333).

3. Pursuant to 29 CFR 1926.3, it is a condition of this contract that the Secretary of Labor or authorized representative thereof, shall have right of entry to any site of contract performance to inspect or investigate the matter of compliance with the construction safety

and health standards and to carry out the duties of the Secretary under Section 107 of the Contract Work Hours and Safety Standards Act (40 U.S.C. 333).

IX. **FALSE STATEMENTS CONCERNING HIGHWAY PROJECTS**

In order to assure high quality and durable construction in conformity with approved plans and specifications and a high degree of reliability on statements and representations made by engineers, contractors, suppliers, and workers on Federal-aid highway projects, it is essential that all persons concerned with the project perform their functions as carefully, thoroughly, and honestly as possible. Willful falsification, distortion, or misrepresentation with respect to any facts related to the project is a violation of Federal law. To prevent any misunderstanding regarding the seriousness of these and similar acts, the following notice shall be posted on each Federal-aid highway project (23 CFR 635) in one or more places where it is readily available to all persons concerned with the project:

NOTICE TO ALL PERSONNEL ENGAGED ON FEDERAL-AID HIGHWAY PROJECTS

18 U.S.C. 1020 reads as follows:

"Whoever, being an officer, agent, or employee of the United States, or of any State or Territory, or whoever, whether a person, association, firm, or corporation, knowingly makes any false statement, false representation, or false report as to the character, quality, quantity, or cost of the material used or to be used, or the quantity or quality of the work performed or to be performed, or the cost thereof in connection with the submission of plans, maps, specifications, contracts, or costs of construction on any highway or related project submitted for approval to the Secretary of Transportation; or

Whoever knowingly makes any false statement, false representation, false report or false claim with respect to the character, quality, quantity, or cost of any work performed or to be performed, or materials furnished or to be furnished, in connection with the construction of any highway or related project approved by the Secretary of Transportation; or

Whoever knowingly makes any false statement or false representation as to material fact in any statement, certificate, or report submitted pursuant to provisions of the Federal-aid Roads Act approved July 1, 1916, (39 Stat. 355), as amended and supplemented;

Shall be fined not more that $10,000 or imprisoned not more than 5 years or both."

X. **IMPLEMENTATION OF CLEAN AIR ACT AND FEDERAL WATER POLLUTION CONTROL ACT**

(Applicable to all Federal-aid construction contracts and to all related subcontracts of $100,000 or more.)

By submission of this bid or the execution of this contract, or subcontract, as appropriate, the bidder, Federal-aid construction contractor, or subcontractor, as appropriate, will be deemed to have stipulated as follows:

1. That any facility that is or will be utilized in the performance of this contract, unless such contract is exempt under the Clean Air Act, as amended (42 U.S.C. 1857 et seq., as amended by Pub.L. 91-604), and under the Federal Water Pollution Control Act, as amended (33 U.S.C. 1251 et seq., as amended by Pub.L. 92-500), Executive Order 11738, and regulations in implementation thereof (40 CFR 15) is not listed, on the date of contract award, on the U.S. Environmental Protection Agency (EPA) List of Violating Facilities pursuant to 40 CFR 15.20.
2. That the firm agrees to comply and remain in compliance with all the requirements of Section 114 of the Clean Air Act and Section 308 of the Federal Water Pollution Control Act and all regulations and guidelines listed thereunder.
3. That the firm shall promptly notify the SHA of the receipt of any communication from the Director, Office of Federal Activities, EPA, indicating that a facility that is or will be utilized for the contract is under consideration to be listed on the EPA List of Violating Facilities.
4. That the firm agrees to include or cause to be included the requirements of paragraph 1 through 4 of this Section X in every nonexempt subcontract, and further agrees to take such action as the government may direct as a means of enforcing such requirements.

XI. **CERTIFICATION REGARDING DEBARMENT, SUSPENSION, INELIGIBILITY AND VOLUNTARY EXCLUSION**

1. **Instructions for Certification - Primary Covered Transactions:**

(Applicable to all Federal-aid contracts - 49 CFR 29)

a. By signing and submitting this proposal, the prospective primary participant is providing the certification set out below.

b. The inability of a person to provide the certification set out below will not necessarily result in denial of participation in this covered transaction. The prospective participant shall submit an explanation of why it cannot provide the certification set out below. The certification or explanation will be considered in connection with the department or agency's determination whether to enter into this transaction. However, failure of the prospective primary participant to furnish a certification or an explanation shall disqualify such a person from participation in this transaction.

c. The certification in this clause is a material representation of fact upon which reliance was placed when the department or agency determined to enter into this transaction. If it is later determined that the prospective primary participant knowingly rendered an erroneous certification, in addition to other remedies available to the Federal Government, the department or agency may terminate this transaction for cause of default.

d. The prospective primary participant shall provide immediate written notice to the department or agency to whom this proposal is submitted if any time the prospective primary participant learns that its certification was erroneous when submitted or has become erroneous by reason of changed circumstances.

e. The terms "covered transaction," "debarred," "suspended," "ineligible," "lower tier covered transaction," "participant," "person," "primary covered transaction," "principal," "proposal," and "voluntarily excluded," as used in this clause, have the meanings set out in the Definitions and Coverage sections of rules implementing Executive Order 12549. You may contact the department or agency to which this proposal is submitted for assistance in obtaining a copy of those regulations.

f. The prospective primary participant agrees by submitting this proposal that, should the proposed covered transaction be entered into, it shall not knowingly enter into any lower tier covered transaction with a person who is debarred, suspended, declared ineligible, or voluntarily excluded from participation in this covered transaction, unless authorized by the department or agency entering into this transaction.

g. The prospective primary participant further agrees by submitting this proposal that it will include the clause titled "Certification Regarding Debarment, Suspension, Ineligibility and Voluntary Exclusion-Lower Tier Covered Transaction," provided by the department or agency entering into this covered transaction, without modification, in all lower tier covered transactions and in all solicitations for lower tier covered transactions.

h. A participant in a covered transaction may rely upon a certification of a prospective participant in a lower tier covered transaction that is not debarred, suspended, ineligible, or voluntarily excluded from the covered transaction, unless it knows that the certification is erroneous. A participant may decide the method and frequency by which it determines the eligibility of its principals. Each participant may, but is not required to, check the nonprocurement portion of the "Lists of Parties Excluded From Federal Procurement or Nonprocurement Programs" (Nonprocurement List) which is compiled by the General Services Administration.

i. Nothing contained in the foregoing shall be construed to require establishment of a system of records in order to render in good faith the certification required by this clause. The knowledge and information of participant is not required to exceed that which is normally possessed by a prudent person in the ordinary course of business dealings.

j. Except for transactions authorized under paragraph f of these instructions, if a participant in a covered transaction knowingly enters into a lower tier covered transaction with a person who is suspended, debarred, ineligible, or voluntarily excluded from participation in this transaction, in addition to other remedies available to the Federal Government, the department or agency may terminate this transaction for cause or default.

* * * * *

Certification Regarding Debarment, Suspension, Ineligibility and Voluntary Exclusion--Primary Covered Transactions

1. The prospective primary participant certifies to the best of its knowledge and belief, that it and its principals:

   a. Are not presently debarred, suspended, proposed for debarment, declared ineligible, or voluntarily excluded from covered transactions by any Federal department or agency;

   b. Have not within a 3-year period preceding this proposal been convicted of or had a civil judgement rendered against them for commission of fraud or a criminal offense in connection with obtaining, attempting to obtain, or performing a public (Federal, State or local) transaction or contract under a public transaction; violation of Federal or State antitrust statutes or commission of embezzlement, theft, forgery, bribery, falsification or destruction of records, making false statements, or receiving stolen property;

   c. Are not presently indicted for or otherwise criminally or civilly charged by a governmental entity (Federal, State or local) with commission of any of the offenses enumerated in paragraph 1b of this certification; and

   d. Have not within a 3-year period preceding this application/proposal had one or more public transactions (Federal, State or local) terminated for cause or default.

2. Where the prospective primary participant is unable to certify to any of the statements in this certification, such prospective participant shall attach an explanation to this proposal.

* * * * *

2. **Instructions for Certification - Lower Tier Covered Transactions:**

(Applicable to all subcontracts, purchase orders and other lower tier transactions of $25,000 or more - 49 CFR 29)

a. By signing and submitting this proposal, the prospective lower tier is providing the certification set out below.

b. The certification in this clause is a material representation of fact upon which reliance was placed when this transaction was entered into. If it is later determined that the prospective lower tier participant knowingly rendered an erroneous certification, in addition to other remedies available to the Federal Government, the department, or agency with which this transaction originated may pursue available remedies, including suspension and/or debarment.

c. The prospective lower tier participant shall provide immediate written notice to the person to which this proposal is submitted if at any time the prospective lower tier participant learns that its certification was erroneous by reason of changed circumstances.

d. The terms "covered transaction," "debarred," "suspended," "ineligible," "primary covered transaction," "participant," "person," "principal," "proposal," and "voluntarily excluded," as used in this clause, have the meanings set out in the Definitions and Coverage sections of rules implementing Executive Order 12549. You may contact the person to which this proposal is submitted for assistance in obtaining a copy of those regulations.

e. The prospective lower tier participant agrees by submitting this proposal that, should the proposed covered transaction be entered into, it shall not knowingly enter into any lower tier covered transaction with a person who is debarred, suspended, declared ineligible, or voluntarily excluded from participation in this covered transaction, unless authorized by the department or agency with which this transaction originated.

f. The prospective lower tier participant further agrees by submitting this proposal that it will include this clause titled "Certification Regarding Debarment, Suspension, Ineligibility and Voluntary Exclusion-Lower Tier Covered Transaction," without modification, in all lower tier covered transactions and in all solicitations for lower tier covered transactions.

g. A participant in a covered transaction may rely upon a certification of a prospective participant in a lower tier covered transaction that is not debarred, suspended, ineligible, or voluntarily excluded from the covered transaction, unless it knows that the certification is erroneous. A participant may decide the method and frequency by which it determines the eligibility of its principals. Each participant may, but is not required to, check the Nonprocurement List.

h. Nothing contained in the foregoing shall be construed to require establishment of a system of records in order to render in good faith the certification required by this clause. The knowledge and information of participant is not required to exceed that which is normally possessed by a prudent person in the ordinary course of business dealings.

i. Except for transactions authorized under paragraph e of these instructions, if a participant in a covered transaction knowingly enters into a lower tier covered transaction with a person who is suspended, debarred, ineligible, or voluntarily excluded from participation in this transaction, in addition to other remedies available to the Federal Government, the department or agency with which this transaction originated may pursue available remedies, including suspension and/or debarment.

* * * * *

Certification Regarding Debarment, Suspension, Ineligibility and Voluntary Exclusion--Lower Tier Covered Transactions:

1. The prospective lower tier participant certifies, by submission of this proposal, that neither it nor its principals is presently debarred, suspended, proposed for debarment, declared ineligible, or voluntarily excluded from participation in this transaction by any Federal department or agency.
2. Where the prospective lower tier participant is unable to certify to any of the statements in this certification, such prospective participant shall attach an explanation to this proposal.

* * * * *

XII. **CERTIFICATION REGARDING USE OF CONTRACT FUNDS FOR LOBBYING**

(Applicable to all Federal-aid construction contracts and to all related subcontracts which exceed $100,000 - 49 CFR 20)

1. The prospective participant certifies, by signing and submitting this bid or proposal, to the best of his or her knowledge and belief, that:

   a. No Federal appropriated funds have been paid or will be paid, by or on behalf of the undersigned, to any person for influencing or attempting to influence an officer or employee of any Federal agency, a Member of Congress, an officer or employee of Congress, or an employee of a Member of Congress in connection with the awarding of any Federal contract, the making of any Federal grant, the making of any Federal loan, the entering into of any cooperative agreement, and the extension, continuation, renewal, amendment, or modification of any Federal contract, grant, loan, or cooperative agreement.

   b. If any funds other than Federal appropriated funds have been paid or will be paid to any person for influencing or attempting to influence an officer or employee of any Federal agency, a Member of Congress, an officer or employee of Congress, or an employee of a Member of Congress in connection with this Federal contract, grant, loan, or cooperative agreement, the undersigned shall complete and submit Standard Form-LLL, "Disclosure Form to Report Lobbying," in accordance with its instructions.

2. This certification is a material representation of fact upon which reliance was placed when this transaction was made or entered into. Submission of this certification is a prerequisite for making or entering into this transaction imposed by 31 U.S.C. 1352. Any person who fails to file the required certification shall be subject to a civil penalty of not less than $10,000 and not more than $100,000 for each such failure.

3. The prospective participant also agrees by submitting his or her bid or proposal that he or she shall require that the language of this certification be included in all lower tier subcontracts, which exceed $100,000 and that all such recipients shall certify and disclose accordingly.

STANDARD SPECIAL PROVISION
MINIMUM WAGES
GENERAL DECISION NC120090 01/06/2012 NC90

Z-90

Date: January 6, 2012

General Decision Number: NC120090 01/06/2012 NC90

Superseded General Decision Numbers: NC20100127

State: North Carolina

Construction Type: HIGHWAY

COUNTIES:

Anson
Cabarrus
Gaston
Mecklenburg
Union

HIGHWAY CONSTRUCTION PROJECTS (excluding tunnels, building structures in rest area projects, railroad construction, bascule, suspension and spandrel arch bridges designed for commercial navigation, bridges involving marine construction, and other major bridges).

Modification Number	Publication Date
0	01/06/2012

SUNC2011-071 09/16/2011

	Rates	Fringes
CARPENTER (Form Work Only)	14.70	
CEMENT MASON/CONCRETE FINISHER		
Anson, Cabarrus, and Gaston Counties	12.87	
Mecklenburg County	12.62	
Union County	12.75	
INSTALLER (Guardrail) (includes Guardrail/Post Driver Work)	11.16	
IRONWORKER (Reinforcing)	14.88	
LABORER		
Asphalt, Asphalt Distributor, Raker, and Spreader	11.78	
Common or General		
Anson and Cabarrus Counties	11.14	
Gaston County	10.63	
Mecklenburg County	11.55	
Union County	10.32	
Concrete Saw	14.26	
Landscape	10.35	
Luteman	12.88	
Mason Tender (Cement/Concrete)	11.25	
Pipelayer	12.93	
Traffic Control (Cone Setter)	12.53	
Traffic Control (Flagger)	9.99	

	Rates	Fringes
POWER EQUIPMENT OPERATORS		
Backhoe/Excavator/Trackhoe		
Anson, Cabarrus, and Gaston Counties	14.21	
Mecklenburg County	13.79	
Union County	14.53	
Broom/Sweeper	13.97	
Bulldozer		
Anson, Cabarrus, and Gaston Counties	15.46	
Mecklenburg County	15.90	
Union County	14.96	
Crane	19.11	
Curb Machine	14.43	
Distributor	14.99	
Drill	16.68	
Grader/Blade		
Anson, Cabarrus, Gaston, and Union Counties	17.99	
Mecklenburg County	18.65	
Loader		
Anson, Cabarrus, Gaston, and Union Counties	14.46	
Mecklenburg County	14.43	
Mechanic	17.13	
Milling Machine	15.80	
Oiler	14.36	
Paver	16.65	
Roller		
Anson, Cabarrus, Gaston, and Union Counties	13.22	
Mecklenburg County	13.29	
Scraper	15.85	
Screed	15.23	
Tractor	14.47	
TRUCK DRIVER		
4 Axle Truck	11.90	
Distributor	16.75	
Dump Truck		
Anson, Cabarrus, and Gaston Counties	13.46	
Mecklenburg County	13.79	
Union County	13.49	
Flatbed Truck	15.02	
Lowboy Truck		
Anson, Cabarrus, Gaston, and Mecklenburg Counties	15.26	
Union County	15.23	
Off the Road Truck	15.00	
Single Axle Truck	12.13	
Tack Truck	16.52	
Water Truck	13.16	

Welders – Receive rate prescribed for craft performing operation to which welding is incidental.

Unlisted classifications needed for work not included within the scope of the classifications listed may be added after award only as provided in the labor standards contract clauses (29 CFR 5.5(a)(1)(ii)).

The body of each wage determination lists the classification and wage rates that have been found to be prevailing for the cited type(s) of construction in the area covered by the wage determination. The classifications are listed in alphabetical order of "identifiers" that indicate whether the particular rate is union or non-union.

Union Identifiers

An identifier enclosed in dotted lines beginning with characters other than "SU" denotes that the union classification and rate have found to be prevailing for that classification. Example: PLUM0198-005 07/01/2011. The first four letters , PLUM, indicate the international union and the four-digit number, 0198, that follows indicates the local union number or district council number where applicable, i.e., Plumbers Local 0198. The next number, 005 in the example, is an internal number used in processing the wage determination. The date, 07/01/2011, following these characters is the effective date of the most current negotiated rate/collective bargaining agreement which would be July 1, 2011 in the above example.

Union prevailing wage rates will be updated to reflect any changes in the collective bargaining agreements governing the rate.

Non-Union Identifiers

Classifications listed under an "SU" identifier were derived from survey data by computing average rates and are not union rates; however, the data used in computing these rates may include both union and non-union data. Example: SULA2004-007 5/13/2010. SU indicates the rates are not union rates, LA indicates the State of Louisiana; 2004 is the year of the survey; and 007 is an internal number used in producing the wage determination. A 1993 or later date, 5/13/2010, indicates the classifications and rates under that identifier were issued as a General Wage Determination on that date.

Survey wage rates will remain in effect and will not change until a new survey is conducted.

WAGE DETERMINATION APPEALS PROCESS

1.) Has there been an initial decision in the matter? This can be:

* an existing published wage determination
* a survey underlying a wage determination
* a Wage and Hour Division letter setting forth a position on a wage determination matter
* a conformance (additional classification and rate) ruling

On survey related matters, initial contact, including requests for summaries of surveys, should be with the Wage and Hour Regional Office for the area in which the survey was conducted because those Regional Offices have responsibility for the Davis-Bacon survey program. If the response from this initial contact is not satisfactory, then the process described in 2.) and 3.) should be followed.

With regard to any other matter not yet ripe for the formal process described here, initial contact should be with the Branch of Construction Wage Determinations. Write to:

Branch of Construction Wage Determinations
Wage and Hour Division
U. S. Department of Labor
200 Constitution Avenue, N.W.
Washington, D.C. 20210

2.) If the answer to the question in 1.) is yes, then an interested party (those affected by the action) can request review and reconsideration from the Wage and Hour Administrator (See 29 CFR Part 1.8 and 29 CFR Part 7). Write to:

Wage and Hour Administrator
U.S. Department of Labor
200 Constitution Avenue, N.W.
Washington, D.C. 20210

The request should be accompanied by a full statement of the interested party's position and by any information (wage payment data, project description, area practice material, etc.) that the requestor considers relevant to the issue.

3.) If the decision of the Administrator is not favorable, an interested party may appeal directly to the Administrative Review Board (formerly the Wage Appeals Board). Write to:

Administrative Review Board
U.S. Department of Labor
200 Constitution Avenue, N.W.
Washington, D.C. 20210

4.) All decisions by the Administrative Review Board are final.

END OF GENERAL DECISION

***** STANDARD SPECIAL PROVISIONS *****

(9-1-11)

DIVISION ONE OF STANDARD SPECIFICATIONS

Division One of the 2012 *Standard Specifications for Roads and Structures* (*Standard Specifications*) shall apply except as follows:

Definitions: Throughout Division One of the *Standard Specifications*, the term "Contractor" is replaced with "Design-Build Team", the term "Bidder" is replaced with "Proposer," the term "Bid" is replaced by "Price Proposal," and the phrase "lowest Responsible Bidder" is replaced with "responsible Proposer with the lowest adjusted price." The replacement of "Contractor" with "Design-Build Team" does not apply to Article 102-2. The replacement of the above terms does not apply when the terms are part of a phrase (e.g. bid bond, prime contractor, total amount bid, etc.)

Additionally, throughout the NCDOT Standard Specifications, the RFP, and other contract documents the terms "NCDOT", "Department", or other names as reference to the Department of Transportation, apply equally to the North Carolina Turnpike Authority (NCTA) and the terms "Board", "Board of Transportation", or other names as reference to the North Carolina Board of Transportation apply equally to the Board of the North Carolina Turnpike Authority. The Board of the North Carolina Turnpike Authority is herein referred to as the Authority Board. In addition, the terms Department of Transportation, Department, and NCDOT are synonymous and are defined so as to include the North Carolina Turnpike Authority as described in Article 6H of Chapter 136 of the North Carolina General Statutes and transferred to the Department of Transportation pursuant to G.S. 136-89.182(b).

Deletions: Articles 102-4, 102-9(C)(2), 103-2(B), 103-4(B) and 104-5 of the *Standard Specifications* are deleted from Design-Build Contracts.

Modifications: The remainder of this Standard Special Provision includes modifications to Division One of the *Standard Specifications*.

SECTION 101
DEFINITION OF TERMS

Page 1-3, Article 101-3, replace and add certain definitions as follows:

ADDITIONAL WORK

Additional work is that which results from a change or alteration to the contract and for which there are contract unit prices in the original contract or an executed supplemental agreement.

ADVERTISEMENT

The public advertisement inviting Statements of Qualifications for the design and construction of specific projects.

AWARD

The decision of the Department of Transportation to accept the proposal of the selected Design-Build Team for work which is subject to the furnishing of payment and performance bonds, and such other conditions as may be otherwise provided by law, the Instructions to Proposers, Request for Proposals, and the *Standard Specifications*.

CHIEF ENGINEER

The Chief Engineer of the North Carolina Turnpike Authority acting directly or through his duly authorized representatives

CONTRACT

The executed agreement between the Department (NCTA) and the successful proposer, covering the performance of, and compensation for, the work. The term contract is all inclusive with reference to all written agreements affecting a contractual relationship and all documents referred to therein. The contract shall include, but not be limited to, the Request for Proposals, all addenda thereto, the Technical Proposal subject to the requirements of the other Contract Documents, the Price Proposal, the printed contract form and all exhibits thereto, the contract bonds, the plans and associated special provisions prepared by the Design-Build Team, standard specifications and supplemental specifications thereto, standard special provisions and project special provisions contained in the Request for Proposals or as developed by the Design-Build Team and accepted by the Department, all Reference Documents, and all executed supplemental agreements. The contract shall constitute one instrument.

DATE OF AVAILABILITY

That date set forth in the Request for Proposals, by which it is anticipated that the Contract will be executed and sufficient design efforts or work sites within the project limits will be available for the Design-Build Team to begin his controlling operations or design.

DEPARTMENT or DEPARTMENT OF TRANSPORTATION

A principal department of the North Carolina Executive Branch that performs the functions of planning, design, construction, and maintenance of an integrated statewide transportation system.

In addition, the terms Department of Transportation, Department, and NCDOT are synonymous and are defined so as to include the North Carolina Turnpike Authority as described in Article 6H of Chapter 136 of the North Carolina General Statutes and transferred to the Department of Transportation pursuant to G.S. 136-89.182(b).

DESIGN-BUILD

A form of contracting in which the successful proposer undertakes responsibility for both the design and construction of a project.

DESIGN-BUILD TEAM

An individual, partnership, joint venture, corporation or other legal entity that furnishes the necessary design and construction services, whether by itself or through subcontracts.

DESIGN-BUILD PROPOSAL

A proposal to contract consisting of a separately sealed Technical Proposal and a separately sealed Price Proposal submitted in response to a Request for Proposals on a Design-Build project.

NORTH CAROLINA TURNPIKE AUTHORITY

A public agency of the State established pursuant to Article 6H, Chapter 136 of the North Carolina General Statutes to study, plan, develop, design, establish, purchase, construct, operate and maintain turnpike projects across the State.

NORTH CAROLINA TURNPIKE AUTHORITY BOARD (AUTHORITY BOARD)

The Board established pursuant to GS 136.89.182 for the purpose of formulating policies and priorities of the North Carolina Turnpike Authority necessary to implement a turnpike program across the State.

NOTICE TO PROCEED

The notice provided by the Turnpike Authority after which the Design-Build Team is authorized to begin certain preconstruction or construction activities as outlined in the Notice to Proceed.

PLANS

The project plans, Standard Drawings, working drawings and supplemental drawings, or reproductions thereof, accepted by the Engineer, which show the location, character, dimensions and details of the work to be performed.

(A) Standard Drawings:

Drawings approved for repetitive use, showing details to be used where appropriate. All Standard Drawings approved by the Department plus subsequent revisions and additions. Standard Drawings are available for purchase from:

Randy A. Garris, PE
State Contract Officer
1591 Mail Service Center
Raleigh, NC 27699-1591

(B) Preliminary Plans:

Department-furnished drawings distributed in concert with a Request for Proposals, or as developed by the Design-Build Team.

(C) Project Plans:

Construction drawings prepared, sealed and completed by the Design-Build Team, or as provided by the Department, that contain specific details and dimensions peculiar to the work.

(D) Release for Construction Plans

Those Project Plans that are conveyed to the field for the purpose of construction. These plans are stamped "RFC" by the Design-Build Team once all the Department comments are addressed to the satisfaction of the Department.

(E) Working Drawings and Supplemental Drawings:

Supplemental design sheets, shop drawings, or similar data which the Design-Build Team is required to submit to the Engineer.

(F) As-Constructed Drawings:

Coordinately correct final drawings prepared by the Design-Build Team, documenting the details and dimensions of the completed work.

PRICE PROPOSAL

The offer of a Proposer, submitted on the prescribed forms, to perform the work and furnish the labor and materials at the price quoted.

PROPOSAL (OR REQUEST FOR PROPOSALS)

The paper document provided by the Department that the proposer uses to develop his paper offer to perform the work at designated bid prices.

PROPOSER

An individual, partnership, firm, corporation, LLC, or joint venture formally submitting a Technical Proposal and Price Proposal in response to a Request for Proposals.

PROVIDED MATERIALS

Those documents, engineering data, designs, drawings, etc, conveyed to the Proposers on the Reduced Candidate List during the course of the procurement process to aid the Proposer in the development of their Technical Proposal, Project design, and the construction of the Project.

REFERENCED DOCUMENTS

Those documents that are referenced within the other Contract Documents that provide additional design and construction requirements or standards that by reference are incorporated into the Contract.

RIGHT OF WAY

The land area shown on the plans as right of way within which the project is to be constructed.

SUBSTANTIAL COMPLETION

Completion of that portion of a contract, as defined in the Project Special Provision entitled "Substantial Completion", for which liquidated damages may be specified.

TABLE OF QUANTITIES

A listing of work items (corresponding to the items in the Trns*port pay item list) that contributes to a project completion. The table shall include estimated quantities for each work item.

TECHNICAL PROPOSAL

A submittal from a proposer, in accordance with requirements of the Instructions to Proposers and the Request for Proposals, for the purpose of final selection. The Technical Proposal is defined to also include any supplemental information requested by the Department from a proposer prior to opening of Price Proposals.

SECTION 102
PROPOSAL REQUIREMENTS AND CONDITIONS

Page 1-9, delete Article 102-1 and replace with the following:

102-1 INVITATION TO BID

After the advertisement has been made, an Invitation to Bid will be made available to known prequalified contractors and any other contracting firms, material suppliers and other interested parties who have requested they be placed on the Invitation to Bid mailing list, informing them that Statements of Qualifications and Proposals will be received for the construction of specific projects. Such invitation will indicate the contract identification number, length, locations and descriptions; a general summary of the scope of work to be performed; and information on how to receive a Request for Qualifications.

All projects will be advertised in daily newspapers throughout the state before the bid opening.

Page 1-9, Article 102-2, add the following as the first paragraph:

Contractors desiring to perform work on NCTA projects shall prequalify with the Department of Transportation in accordance with the Standard Specifications. Additional prequalification requirements may be dictated in the Request for Qualifications or Request for Proposals on a project specific basis. Additionally, Contractors may be precluded, with cause, from performing work on NCTA projects regardless of their status on the Department of Transportation's Prequalified Bidders List and/or Approved Subcontractors List.

Page 1-12, delete Article 102-3 and replace with the following:

102-3 CONTENTS OF REQUEST FOR PROPOSALS

An Instructions to Proposers and the remainder of the Request for Proposals will be furnished by the Department to the selected proposers from among the respondents to the Request for Qualifications. Each Instructions to Proposers and Request for Proposals will be marked on the front cover by the Department with an identifier of the Proposer to whom it is being furnished. These documents will state the location of the project and will show a schedule of contract items for which Technical and Price Proposals are invited. These documents will set forth the date and time Technical and Price Proposals are to be submitted and when the Price Proposals will be opened. The Request for Proposals will also include special provisions or requirements that vary from or are not contained in any preliminary design information or standard specifications.

The Request for Proposals will also include the printed contract forms and signature sheets for execution by both parties to the contract. In the event the Proposer is awarded the contract, execution of the Request for Proposals by the Proposer is considered the same as execution of the contract.

Standard specifications, sealed plans specifically identified as the Department's responsibility and other documents designated in the Request for Proposals shall be considered a part of the Request for Proposals whether or not they are attached thereto. All papers bound with the proposal are necessary parts thereof and shall not be detached, taken apart, or altered.

The names and identity of each prospective Proposer that receives a copy of the Request for Qualifications for the purposes of submitting a Statement of Qualifications shall be made public, except that a potential Proposer who obtains a Request for Qualifications may, at the time of ordering, request that his name remain confidential.

Up to three copies of the Instructions to Proposers and the Request for Proposals will be furnished to each prospective Proposer. Additional copies may be purchased for the sum of $25 each. The copy marked with the Proposer's name and prequalification number shall be returned to the Department as the Proposer's Price Proposal.

Page 1-14, Article 102-7, 4th paragraph, delete the first two sentences and replace with the following:

The Proposer is cautioned that details shown in the subsurface investigation report are preliminary only. The subsurface investigation and subsurface report, if provided, is done so for information purposes only.

Pages 1-14, delete Article 102-8 and replace with the following:

102-8 PREPARATION AND SUBMISSION OF PRICE PROPOSALS

All Price Proposals shall be prepared and submitted in accordance with the following requirements:

(1) The Request for Proposals provided by the Department shall be used and shall not be taken apart or altered. The Price Proposal shall be submitted on the same form, which has been furnished to the Proposer by the Department as identified by the Proposer's name marked on the front cover by the Department.

(2) All entries including signatures shall be written in ink.

(3) The Proposer shall submit a lump sum or unit price for every item in the Price Proposal. The lump sum or unit prices bid for the various contract items shall be written in figures.

(4) An amount bid shall be entered in the Request for Proposals for every item and the price shall be written in figures in the "Amount Bid" column in the Request for Proposals.

(5) An amount bid shall be entered in the proposal for every item on which a unit price has been submitted. The amount bid for each item other than lump sum items shall be determined by multiplying each unit bid price by the quantity for that item and shall be written in figures in the Amount Bid column in the proposal.

(6) The total amount bid shall be written in figures in the proper place in the Request for Proposals. The total amount bid shall be determined by adding the amounts bid for each lump sum item.

(7) Changes in any entry shall be made by marking through the entry in ink and making the correct entry adjacent thereto in ink. A representative of the Proposer shall initial the change in ink.

(8) The Price Proposal shall be properly executed. To constitute proper execution, the Price Proposal shall be executed in strict compliance with the following:

   (a) If a Price Proposal is by an individual, it shall show the name of the individual and shall be signed by the individual with the word "Individually" appearing under the signature. If the individual operates under a firm name, the bid shall be signed in the name of the individual doing business under the firm name.

   (b) If the Price Proposal is by a corporation, it shall be executed in the name of the corporation by the President, Vice President, or Assistant Vice President. It shall be attested by the Secretary or Assistant Secretary. The seal of the corporation shall be affixed. If the Price Proposal is executed on behalf of a corporation in any other manner than as above, a certified copy of the minutes of the Board of Directors of said corporation authorizing the manner and style of execution and the authority of the person executing shall be attached to the Price Proposal or shall be on file with the Department.

(c) If the Price Proposal is made by a partnership, it shall be executed in the name of the partnership by one of the general partners.

(d) If the Price Proposal is made by a limited liability company, it shall be signed by the manager, member, or authorized agent and notarized.

(e) If the Price Proposal is made by a joint venture, it shall be executed by each of the joint venturers in the appropriate manner set out above. In addition, the execution by the joint venturers shall appear below their names.

(f) The Price Proposal execution shall be notarized by a notary public whose commission is in effect on the date of execution. Such notarization shall be applicable both to the Price Proposal and to the Non-Collusion Affidavit, Debarment Certification and Gift Ban Certification that is part of the signature sheets.

(9) The Price Proposal shall not contain any unauthorized additions, deletions, or conditional bids.

(10) The Proposer shall not add any provision reserving the right to accept or reject an award or to enter into a contract pursuant to an award.

(11) The Price Proposal shall be accompanied by a bid bond on the form furnished by the Department or by a bid deposit. The bid bond shall be completely and properly executed in accordance with the requirements of Article 102-10 and as modified herein. The bid deposit shall be a certified check or cashier check in accordance with Article 102-10 and as modified herein.

(12) The Price Proposal shall be placed in a sealed envelope and shall have been delivered to and received by the Department prior to the time specified in the Instructions to Proposers.

Page 1-18, Article 102-10, 3rd paragraph, delete the fifth sentence and replace with the following:

The condition of the bid bond or bid deposit is: the Principal shall not withdraw its bid within 120 days after the submittal of the same, and if the Department shall award a contract to the Principal, the Principal shall within 14 calendar days after the notice of award is received by him, give payment and performance bonds with good and sufficient surety as required for the faithful performance of the contract and for the protection of all persons supplying labor and materials in the prosecution of the work.

Page 1-18, Article 102-10, delete the end of the Article beginning with, and inclusive of, the 6th paragraph

Pages 1-19, delete Article 102-12 and replace with the following:

102-12 WITHDRAWAL OR REVISION OF BIDS

A Design-Build Team will not be permitted to withdraw its Technical and Price Proposals after they have been submitted to the Department, unless allowed under Article 103-3 or unless otherwise approved by the State Highway Administrator.

Page 1-19, delete Article 102-13 and replace with the following:

102-13 RECEIPT AND OPENING OF BIDS

Price Proposals will be opened and read publicly on the date and time indicated in the Instructions to Proposers and Request for Proposals. The scores of the previously conducted evaluation of the Technical Proposals will also be read publicly in accordance with the procedures outlined in the Instructions to Proposers. Proposers, their authorized agents, and other interested parties are invited to be present.

Page 1-19, Article 102-14, Replace the 1st paragraph with the following:

102-14 REJECTION OF BIDS

Any Price Proposal submitted which fails to comply with any of the requirements of Articles 102-8, 102-9 or 102-10, or with the requirements of the project scope and specifications shall be considered irregular and may be rejected. A Price Proposal that does not contain costs for all proposal items shall be considered irregular and may be rejected.

Page 1-20, Article 102-15, Replace Subarticle 102-15(L) with the following:

(L) Failure to submit the documents required by Article 109-10 within 120 days after the contract Final Acceptance Date, as defined in Article 101-3.

Page 1-21, Article 102-15, add the following as the last paragraph:

A Design-Build Team member or Subcontractor may be disqualified, for cause, from bidding on NCTA projects independent of any action taken by the Department of Transportation. Disqualification from any NCTA work as a result of any cause will culminate in a notification of such to the Department of Transportation, and may result in a recommendation for disqualification from the Department's Prequalified Bidders List or Approved Subcontractor List.

SECTION 103
AWARD AND EXECUTION OF CONTRACT

Page 1-21, delete Article 103-1 and replace with the following:

103-1 CONSIDERATION OF PRICE PROPOSALS

After the Price Proposals are opened and read, they will be tabulated. The Price Proposal and score of the Technical Proposal will be made available in accordance with procedures outlined in the Instructions to Proposers. In the event of errors, omissions, or discrepancies in the bid prices, corrections to the Price Proposal will be made in accordance with the provisions of Article 103-2. Such corrected bid prices will be used to determine the lowest adjusted price.

After the reading of the Price Proposals and technical scores, the Department will calculate the lowest adjusted price as described in the Instructions to Proposers.

The right is reserved to reject any or all Price Proposals, to waive technicalities, to request the Proposer with the lowest adjusted price to submit an up-to-date financial and operating statement, to advertise for new proposals, or to proceed to do the work otherwise, if in the judgment of the Department, the best interests of the State will be promoted thereby.

Page 1-21, Subarticle 103-2(A), add items (6) and (7) as follows:

(6) Discrepancy in the "Total Amount Bid" and the addition of the "Amount Bid" for each line Item

In the case of the Total Amount Bid does not equal the summation of each Amount Bid for the line items, the summation of each Amount Bid for the line items shall be deemed to be the correct Total Amount Bid for the entire project.

(7) Omitted Total Amount Bid –Amount Bid Completed

If the Total Amount Bid is not completed and the Amount Bid for all line items is completed the Total Amount Bid shall be the summation of the Amount Bid for all line items.

Page 1-24, Subarticle 103-4(A), first paragraph, replace the 4th and 5th sentences with the following:

Where award is to be made, the notice of award will be issued within 120 days after the submittal of Price Proposals, except with the consent of the responsible Proposer with the lowest adjusted price the decision to award the contract to such bidder may be delayed for as long a time as may be agreed upon by the Department and such Proposer. In the absence of such agreement, the Proposer may withdraw his Price Proposal at the expiration of the 120 days without penalty if no notice of award has been issued.

Page 1-25, Article 103-6, delete the 1st and 2nd paragraphs and replace with the following:

Checks that have been furnished as a bid deposit will be retained until after the contract bonds have been furnished by the successful proposer, at which time the checks that were furnished as a bid deposit will be returned.

Page 1-25, Article 103-8, replace the entire article with the following:

As soon as possible following receipt of the properly executed contract bonds, the Department of Transportation, NCTA will complete the execution of the contract, retain the original contract, and return one certified copy of the contract to the Design-Build Team.

SECTION 104
SCOPE OF WORK

Page 1-26, delete Article 104-1 and replace with the following:

104-1 INTENT OF CONTRACT

The intent of the contract is to prescribe the work or improvements that the Design-Build Team undertakes to perform, in full compliance with the contract documents. In case the method of construction or character of any part of the work is not covered by the contract, this section shall apply. The Design-Build Team shall perform all work in accordance with the contract or as may be modified by written orders, and shall do such special, additional, extra, and incidental work as may be considered necessary to complete the work to the full intent of the contract. Unless otherwise provided elsewhere in the contract, the Design-Build Team shall furnish all implements, machinery, equipment, tools, materials, supplies, transportation, and labor necessary for the design, prosecution and completion of the work.

Page 1-26, Article 104-3, replace "plans or details of construction" with "contract" in all instances within this Article.

Page 1-31, Article 104-8, add the following Subarticle to the end of this article:

(E) Coordination with CPM

If the Design-Build Team requests additional compensation in accordance with Articles 104-3, 104-7, and this Article, a fragmentary logic diagram (fragnet) shall be prepared and submitted with such request. A fragnet is defined as the sequence of new activities that are proposed to be added to the current schedule to represent the alleged cost and potential time impact(s). The fragnet shall be developed with sufficient detail to clearly depict the alleged change to the current schedule of record.

The Design-Build Team shall prepare the fragnet depicting all activities and costs associated with the request for additional compensation. The fragnet shall identify all predecessor and successor activities, any changes in durations of existing activities and any activities added to or deleted from the current schedule or record as a direct result of the request for additional compensation.

If the request for additional compensation is agreeable to the NCTA, the NCTA will evaluate the provided fragnet within current schedule of record as follows:

(1) The Design-Build Team shall provide the fragnet, supporting information and narrative describing how the fragnet is incorporated (predecessors and successors) into the schedule referenced below.

(2) The Design-Build Team shall update the current schedule of record to the anticipated supplemental agreement execution date and provide this schedule to the NCTA for review.

(3) The Design-Build Team shall provide a separate updated schedule, as defined in item 2 above, with the fragnet inserted.

(4) The revised Scheduled Completion Date will be evaluated by the NCTA; and

(5) If the associated time difference in the above Scheduled Completion Dates (items 2 and 3 above) results in a time extension, such extension will be provided within the supplemental agreement. If project float is created by the work, it will be encompassed within the modified and updated schedule of record. Both the Design-Build Team and the NCTA will have access to this float as detailed in Article 108-2 of this Standard Special Provision.

Page 1-32, Subarticle 104-8(B), 2nd paragraph, delete the first sentence and replace with the following:

If the contractor chooses to pursue the claim after the disputed work is complete, he shall submit a written claim to the Engineer for an adjustment in compensation based upon his cost records within 90 calendar days after completion of the disputed work.

Page 1-32, Subarticle 104-8(B), 6th paragraph, delete the sixth bullet and replace with the following:

(6) The failure of the Contractor to submit the written request for an adjustment in compensation with cost records and supporting information within 90 days of completion of the affected work.

Page 1-35, Article 104-10, replace the first paragraph with the following:

104-10 MAINTENANCE OF THE PROJECT

The Design-Build Team shall maintain the project from the date of beginning construction on the project until the project is finally accepted. For sections of facilities impacted by utility construction / relocation performed by the Design-Build Team prior to beginning construction on the roadway project, maintenance of the impacted sections of facilities shall be performed by the Design-Build Team beginning concurrently with the impact. All existing and constructed guardrail / guiderail within the project limits shall be included in this maintenance. This maintenance shall be continuous and effective and shall be prosecuted with adequate equipment

and forces to the end that all work covered by the contract is kept in satisfactory and acceptable conditions at all times. The Design-Build Team shall perform weekly inspections of guardrail and guiderail and shall report damages to the Engineer on the same day of the weekly inspection. Where damaged guardrail or guiderail is repaired or replaced as a result of maintaining the project in accordance with this Article, such repair or replacement shall be performed within 7 consecutive calendar days of such inspection report.

Page 1-35, Article 104-10, add the following after the last paragraph:

The Design-Build Team will not be compensated for performance of weekly inspections and damage reports for the guardrail / guiderail. Other maintenance activities for existing guardrail / guiderail will be handled in accordance with Articles 104-7 and 104-8.

SECTION 105
CONTROL OF WORK

Pages 1-40, delete Article 105-2 and replace with the following:

105-2 PLANS AND WORKING DRAWINGS

All plans shall be supplemented by such approved working drawings as are necessary to adequately control the work. Working drawings furnished by the Design-Build Team and approved by the Engineer shall consist of such detailed drawings as may be required to adequately control the work. They may include stress sheets, shop drawings, erection drawings, falsework drawings, cofferdam drawings, bending diagrams for reinforcing steel, catalog cuts, or any other supplementary drawings or similar data required of the Design-Build Team. When working drawings are approved by the Engineer, such approval shall not operate to relieve the Design-Build Team of any of his responsibility under the contract for the successful completion of the work.

Changes on shop drawings after approval and/or distribution shall be subject to the approval of the Engineer and he shall be furnished a record of such changes.

Page 1-41, Article 105-3, add the following after the 3rd paragraph:

The Design-Build Team shall bear all the costs of providing the burden of proof that the nonconforming work is reasonable and adequately addresses the design purpose. The Design-Build Team shall bear all risk for continuing with nonconforming work in question until it is accepted.

The Engineer may impose conditions for acceptance of the nonconforming work. The Design-Build Team shall bear all costs for fulfilling the conditions.

The decisions whether the product satisfies the design purpose, whether the nonconforming work is reasonably acceptable and the conditions for acceptance are at the sole discretion of the Engineer.

Pages 1-41, delete Article 105-4 and replace with the following:

105-4 COORDINATION OF PLANS, SPECIFICATIONS, SUPPLEMENTAL SPECIFICATIONS, AND SPECIAL PROVISIONS

The Request for Proposals, all construction Plans, the Standard Specifications, Supplemental Specifications and Special Provisions and all supplementary documents are essential parts of the contract and a requirement occurring in one is as binding as though occurring in all. They are complementary and describe and provide the complete contract.

In case of discrepancy or conflict, the order in which they govern shall be as follows:

(A) Request for Proposals, in which Project Special Provisions govern Standard Special Provisions

(B) Technical Proposal from the Design-Build Team

(C) Accepted Plans and Details from the Design-Build Team, or sealed plans provided by the Department, as applicable

(D) Standard Drawings

(E) Standard Specifications

Where dimensions on the plans are given or can be computed from other given dimensions they shall govern over scaled dimensions.

The Design-Build Team shall take no advantage of any error or omission in the plans, estimated quantities, or specifications. In the event the Design-Build Team discovers an error or omission, he shall immediately notify the Engineer.

Page 1-44, delete Article 105-9 and replace with the following:

105-9 CONTRUCTION STAKES, LINES, AND GRADES

The Design-Build Team shall be responsible for all surveying, construction staking and layout required in the performance of the work. He will be responsible for the accuracy of lines, slopes, grades and other engineering work which he provides under this contract.

SECTION 106
CONTROL OF MATERIAL

Page 1-49, Article 106-2, add the following after the second paragraph:

Prior to beginning construction, the Design-Build Team shall provide a Table of Quantities as described in Article 101-3 herein.

The Table of Quantities Work Items shall correspond to Pay Items as defined in the Standard Specifications. These Work Items have associated Materials and Conversion Factors. For non-standard Work Items, a Generic Work Item with the correct Unit of Measure and in an appropriate category will be used. For example, "GENERIC TRAFFIC CONTROL ITEM – EA" or "GENERIC RETAINING WALL ITEM – LF". For these Generic Work Items, Materials must be defined and appropriate conversion factors submitted.

An initial Table of Quantities shall be submitted no later than 30 calendar days after the date of award. The Table of Quantities shall be updated and resubmitted within 14 days of when a set of Plans is sealed as Release for Construction (RFC) Plans, and whenever there are substantial changes to the Quantities on previously incorporated RFC Plans.

Page 1-51, Article 106-6, add the following after the last paragraph:

For items normally pretested by the Department, the Design-Build Team shall provide a minimum of 30 days notice prior to the beginning of production of the items for this project along with final approved shop drawings.

SECTION 107
LEGAL RELATIONS AND RESPONSIBILITY TO PUBLIC

Page 1-53, Article 107-1, replace the first paragraph with the following:

The Design-Build Team shall remain fully informed of all Federal and State laws, all local laws, ordinances, and regulations, and all orders and decrees of bodies or tribunals having any jurisdiction or authority which may in any manner affect those engaged or employed in the work or which in any way affect the conduct of the work. He shall at all times observe and comply with all such laws, ordinances, regulations, orders, and decrees; and shall indemnify and hold harmless the Authority Board, Turnpike Authority, NCDOT Board of Transportation and the Department of Transportation and their agents and employees from any claim or liability arising from or based on the violation of any such law, ordinance, regulation, order, or decree, by the Design-Build Team or by his agents and employees. If during the course of the contract any laws ordinances and regulations, and all orders and decrees may be changed, the Design-Build Team shall comply fully with the same.

Page 1-53, Article 107-1, replace the last paragraph of this article with the following:

Comply with all Federal, State and local regulations when performing building removal and/or asbestos removal and disposal, or underground storage tank removal and disposal. Any fines resulting from violations of any regulation are the sole responsibility of the Design-Build Team and the Design-Build Team agrees to indemnify and hold harmless the Department and the Turnpike Authority against any assessment of such fines.

Page 1-58 Article 107-14, replace the first paragraph with the following:

The Design-Build Team shall indemnify and save harmless the Turnpike Authority Board and the NCDOT Board of Transportation and members and the Department of Transportation and Turnpike Authority and their officers, agents, and employees from all suits, actions, or claims of any character brought for any injury or damages received or sustained by any person, persons, or property by reason of any act of the Design-Build Team, subcontractor, its agents or employees, in the performance of the contract. The Design-Build Team's liability to save harmless and indemnify shall include, but not by way of limitation, the following:

Page 1-59, Article 107-14, replace the last paragraph of this article with the following:

In cases where claims are made or suits filed against employees, agents, or officers of the Turnpike Authority or the Department of Transportation or members of Authority Board or the Board of Transportation, the Turnpike Authority may retain from monies due the Design-Build Team sufficient to indemnify such employee, agent, or officer of the Turnpike Authority or the Department of Transportation or member of the Authority Board or Board of Transportation for any amounts which they may be held liable for but for which the Design-Build Team is responsible under the requirements of Section 107. In the event that there is not sufficient retainage or the final estimate is paid, the Turnpike Authority may collect from the Design-Build Team or its Surety amounts sufficient to indemnify such employee, agent, or officer of the Turnpike Authority or the Department of Transportation or member of the Authority Board or Board of Transportation for such damages incurred.

Page 1-61, delete Article 107-19 and replace with the following:

107-18 FURNISHING RIGHT OF WAY

The responsibility for coordinating the securing of all necessary rights of way is as outlined in the Request for Proposals.

Page 1-61, Article 107-19, replace the entire article with the following:

Employees, agents, officers, and members of the Authority Board, NCDOT Board of Transportation, Turnpike Authority or the Department of Transportation shall not be held personally liable for any damages connected with the work, it being specifically understood in all such matters that they act solely as agents and representatives of the Authority Board, NCDOT Board of Transportation, Turnpike Authority or the Department of Transportation.

SECTION 108
PROSECUTION AND PROGRESS

Page 1-64. Article 108-2, replace the entire article with the following:

108-2 COST-LOADED CRITICAL PATH METHOD PROJECT SCHEDULE

(A) General Requirements

The Design-Build Team shall create a Cost-Loaded Critical Path Method Project Schedule (CPM). The Design-Build Team shall include in the CPM, the work of subcontractors, vendors, suppliers, utilities, railroads, permitting agencies, NCDOT, NCTA, and all other parties associated with the Project. Failure by the Design-Build Team to include any element of its Work or the work of others required for completion of the Project will not excuse the Design-Build Team from completing the Project by the Contract Completion Date(s). The Design-Build Team shall assign a dollar value to each activity in the CPM. The Design-Build Team shall use the CPM to prepare its payment applications in accordance with Article 109-4 of the Standard Special Provisions, Division One, found elsewhere in this RFP. The Design-Build Team shall provide adequate time in the schedule for all parties involved with the Project to complete their Work, including inspections, procurement activities and testing. The Design-Build Team's plan, as presented in the CPM, shall adhere to all Contract requirements.

The Engineer's acceptance of any schedule does not relieve the Design-Build Team of responsibility for the accuracy or feasibility of the schedule, does not modify the contract, will not be construed as an endorsement or validation of the Design-Build Team's plan, and does not guarantee that the Project can be performed or completed as scheduled. The Engineer's acceptance of the Design-Build Team's schedules in no way attests to the validity of the assumptions, logic constraints, dependency, relationships, resource allocations, resource availability, manpower and equipment, or any other aspect of the means and methods of performing the Work. The Design-Build Team is and shall remain solely responsible for the scheduling, planning, and execution of the Work in order to meet the Project Milestones, the Intermediate Contract Times, and the Contract Completion Date(s).

NCTA will only reimburse costs for delays as identified in Article 104-4 of the Standard Special Provisions, Division One. Except for cost identified in Article 104-4, NCTA will not be responsible for additional or unabsorbed overhead costs resulting from delays, regardless of whether or not the delays were excusable.

Although the Design-Build Team may plan to achieve Substantial Completion or Final Completion early, in no event will the Design-Build Team be entitled to any additional compensation related to the inability to complete work in advance of the applicable contract deadline.

The Design-Build Team will not be permitted to utilize a resource leveled schedule for the purposes of payment, determining expected start and finish dates, or the longest path of the

schedule. Rather, the longest path and expected start and finish dates will be determined by logic, durations, and calendars.

Materials – The Design-Build Team shall produce every schedule referenced in this Provision and/or submitted to the Engineer on a computer using software and files that are compatible with the most recent version of Primavera.

Definitions – The following definitions apply solely to the terms used in this provision. The following definitions do not modify in any way the definitions provided elsewhere in the Contract Documents.

Activity – A discrete, identifiable task or event that takes time, has definable start and stop dates, furthers the Work's progress, and can be used to plan, schedule, and monitor a project.

Activity Calendar – A set of days assigned to an activity on which work associated with the activity may be scheduled.

Activity Code – Additional information assigned to an activity for purposes of grouping or filtering related activities. Common codes include phase, area, responsibility, subcontractor, type of work, and sub phase.

Activity ID – A unique, alphanumeric, identification code assigned to an activity.

Actual Dates – Actual Starts and Actual Finishes of activities in the schedule.

Actual Finish – The date when the work represented by a specific activity in the schedule was actually finished.

Actual Start – The date when the work represented by a specific activity in the schedule was actually started.

Activity Network Diagram – A graphic representation of a CPM schedule that shows the relationships among activities.

Bar Chart – A graphic representation of a schedule without relationships. A timescale appears along the horizontal axis.

Baseline Schedule – The first accepted CPM schedule showing the accepted plan to complete the entire Project.

CPM of Record – The most recent CPM schedule accepted by the Engineer.

Calendar Day – A day shown on the calendar beginning and ending at midnight.

Constraint – A restriction imposed in a schedule, which fixes a value that would otherwise be calculated within the schedule. Examples of values that can be fixed by a constraint include float, start date, end date, and completion date.

Contract Time – The number of calendar days inclusive between the Notice to Proceed and the Contract Completion Date.

Contract Value – The Contract Lump Sum Price and any additional dollar value added through Supplemental Agreement(s).

Controlling Activity – The first incomplete activity on the Critical Path. This term is considered synonymous with "Controlling Operation."

Critical Delay – A delay to an activity on the critical path that extends the Scheduled Completion Date.

Critical Path – The longest path of activities that determines the scheduled completion date of the Project. Activities on the critical path are critical activities.

Data Date – The earliest possible date identified in a schedule from which remaining activities can proceed.

Early Finish – The earliest date an activity can finish based on its duration and its predecessors.

Early Start – The earliest date an activity can start based on its predecessors.

Final Schedule – The last monthly update CPM schedule containing actual start and finish dates for every activity.

Free Float – The amount of time an activity can be delayed and not delay a successor.

Lag – An offset of time from the predecessor to the successor. Lag is a numerical value that is not assigned a description or activity number.

Late Finish – The latest date an activity can finish based on its successors without causing a delay to the Scheduled Completion Date of the Project.

Late Start – The latest date an activity can start based on its successors and duration without causing a delay to the Scheduled Completion Date of the Project.

Logic – Plural or singular reference to the predecessor and successor relationships between activities in the schedule.

Milestone – An activity with no duration that is typically used to represent the beginning or end of the project or an interim phase. Includes, but is not limited to, Intermediate Completion Dates and the Contract Completion Date.

Progress Schedule – A CPM schedule produced by incorporating the Project's actual progress into the CPM of Record for purposes of reviewing payment applications prior to any major schedule revisions.

Open End – The condition that exists when an activity has either no predecessor or no successor, or when an activity's only predecessor relationship is a finish-to-finish or only successor relationship is a start-to-start.

Original Duration – The original estimate of time, expressed in workdays, required to perform an activity.

Preceeding Work – Work that must be preformed prior to work being preformed on the same project by other Contractors or Design-Build Teams and under separate contract with the NCTA.

Predecessor – An activity that is defined by schedule logic to precede another activity.

Preferential Logic – A predecessor or successor relationship that is not based on the minimum requirements for construction. For example, working from North to South versus working from South to North when contract has no restriction either way.

Punch Work – Minor corrective work typically performed at the end of construction that is necessary to bring the Project into full compliance with the requirements of the Contract.

Relationship – Interdependence between two activities. Relationships link an activity to predecessors and successors.

Remaining Duration – The estimated time, expressed in workdays, required to complete an activity.

Revised Schedule – A Schedule of Record with Schedule Revisions.

Scheduled Completion Date – The completion date forecast by the CPM schedule. The schedule may also forecast Intermediate Completion Dates for Milestones, Phases, or other portions of the Project.

Schedule Revision(s) – A change in the method of calculation, relationships, sequence, or original duration of activities in the schedule; or a change in the remaining duration of a work activity that is not caused by the actual progress of the activity. Revisions can be considered either Major or Minor as noted in Article 108-2 Section F.

Successor – An activity that is defined by schedule logic to succeed another activity.

Total Float – The amount of time an activity can be delayed and not delay the Scheduled Completion Date.

(B) Design-Build Team's Scheduling Representative

The Design-Build Team shall propose to NCTA a person to serve as the Schedule Representative responsible for developing, updating, and revising the Design-Build Team's CPM. The Design-Build Team shall propose a Schedule Representative with at least 500 hours of scheduling experience, and at least one year of project management experience including responsibility for the project's budget. The Schedule Representative may also serve as the project manager, so long as all the requirements of this Provision can still be met. The proposed Schedule Representative's qualifications shall be submitted with the Technical Proposals for NCTA evaluation. The Engineer may reject a Scheduling Representative that does not meet the minimum requirements of this Provision. In such case, the Design-Team must designate another individual meeting the minimum requirements for a Scheduling Representative prior to the acceptance of the Initial CPM.

The Design-Build Team shall authorize the Schedule Representative to certify schedules, answer schedule-related questions, and propose revisions to the schedule as necessary to present a current and reliable plan of construction. The Schedule Representative shall be authorized to speak on behalf of the Design-Build Team in matters related to scheduling and budgeting of the Work. The Schedule Representative shall attend all scheduling and progress meetings, including, but not limited to, the Design-Build Team's schedule meetings with subcontractors, vendors, utility companies, or other government agencies. The Design-

Build Team shall employ the Schedule Representative on a full time basis. The Design-Build Team shall assign the Schedule Representative exclusively to this Project, and the Scheduling Representative shall be physically present on site to execute the duties outlined in this Provision.

If the accepted Schedule Representative is no longer assigned to the Project, the Design-Build Team shall submit a new Schedule Representative for the Engineer's review within 14 days of receiving notice of the Schedule Representative's departure.

(C) Interim Schedule

In addition to Section 800 of the Standard Specifications, the Design-Build Team may submit electronically to NCTA a cost-loaded Interim Critical Path Method Project Schedule (Interim Schedule). The Interim Schedule shall be submitted electronically to the NCTA within 7 days of Notice to Proceed. The NCTA will use the Interim Schedule to monitor the progress of the Project and process the Design-Build Team's payment applications for up to 90 days from the Notice to Proceed. The use of an Interim Schedule in lieu of an Initial Cost-Loaded Critical Path Method schedule is optional.

The Interim Schedule shall meet the following requirements:

(1) The Interim Schedule will start with an activity identified as "Notice to Proceed." The Design-Build Team shall constrain "Notice to Proceed" to start on the expected date of the Notice to Proceed.

(2) The last activity in the Interim Schedule will be identified as "Project Completion." The Design-Build Team shall plan the other activities in the schedule so that the late finish date of "Project Completion" is calculated to occur on the Contract Completion Date.

(3) The Design-Build Team shall identify all major components of Work in the Interim Schedule as activities. For the Interim Schedule, the Design-Build Team may present large components of the Work, such as "construction of the Project," as a single activity in the schedule, so long as the Interim schedule meets the other requirements of this Provision.

The Design-Build Team shall identify the following for each activity in the Interim Schedule.

(a) A unique alphanumeric activity ID

(b) A description of the work associated with each activity ID

(c) A duration

(i) The Design-Build Team shall limit activities expected to start in the first 90 days to a maximum of 20 workdays duration. The Design-Build Team shall subdivide activities expected to take longer than 20 days so as to provide more detail and to meet this requirement. Any duration provided by NCTA, utilities, or other government agencies will be exempt from this requirement.

(ii) The Design-Build Team may assign any realistic durations for activities expected to start more than 90-days after Notice to Proceed.

(d) Predecessors

(e) Successors

(f) Value of the Work

(i) The Design-Build Team shall assign an accurate dollar value to each activity expected to start within 90 days of Notice to Proceed based on estimated costs plus associated profit and overhead. The profit and overhead assigned by the Design-Build Team to the individual activities starting in the first 90 days shall be equal to or less than the mark-up applied to the Work when establishing the Contract Lump Sum Price.

(ii) The Design-Build Team shall limit the value of an activity to $500,000 for activities expected to start in the first 90 days. The Design-Build team shall subdivide activities starting in the first 90 days and with anticipated values over $500,000 into 2 or more activities to meet this requirement.

(iii) The Design-Build Team shall assign a dollar value to each activity in the Interim Schedule.

(iv) Activities may be assigned a value of zero dollars, as appropriate.

(v) The total value of all activities in the Interim Schedule shall be equal to the Contract Lump Sum Price.

(vi) Any activities that are incidental will have a value of zero dollars.

(4) The Design-Build Team shall assign each activity in the Interim Schedule at least one predecessor and one successor, except the first activity and the last activity in the schedule.

(5) The Design-Build Team shall use scheduling software to calculate the following data for each activity in the schedule:

(a) Early Start
(b) Early Finish
(c) Late Start
(d) Late Finish
(e) Total Float

(6) The Design-Build Team is not required to submit a written Narrative with the Interim Schedule. However, NCTA will accept and review written narratives as part of its technical assessment of the Design-Build Team's plan of construction. The Design-Build Team's written narrative should explain the planned sequence of work, the critical path, proposed phasing of the Project, and any other scheduling assumptions made by the Design-Build Team.

The Engineer may choose to reject the Interim Schedule if it does not conform to the requirements of this Provision. If the Engineer rejects the Interim Schedule, the Project will be administered as if no Interim Schedule had been submitted.

(D) Initial Cost-Loaded Critical Path Method Schedule (ICPM)

Within 30 days of Notice to Proceed, the Design-Build Team shall submit electronically to the Engineer an initial Cost-Loaded Critical Path Method Project Schedule (ICPM) meeting

the requirements of this Provision and using industry-accepted CPM scheduling practices as identified in the AGC's Construction Planning and Scheduling book, Second Edition. Within 21 days of the receipt of the Design Build Team's Initial Schedule, the Engineer will complete the review of the ICPM. If the Engineer decides it is warranted, the Engineer will convene a joint review conference at which the Engineer and the Design-Build Team will make any necessary corrections or adjustments to the ICPM. If a revision is necessary either from the Engineer's Review or the joint review conference, the Design-Build Team shall submit a revised ICPM electronically within 7 days of such joint review conference and the Engineer will review the revised ICPM within 7 days of re-submittal. The Design Build Team and the Engineer will repeat this process until an acceptable ICPM is established.

Once the ICPM has been accepted, it becomes the baseline schedule for the Project and the first CPM of Record for the Project. If an Interim Schedule was submitted and accepted by the Engineer, the accepted ICPM replaces the Interim Schedule for all purposes, including payment.

The Design-Build Team shall submit an ICPM that meets the following requirements.

(1) The first activity in the schedule is "Notice to Proceed." The Design-Build Team shall constrain this activity to start on the date of the Notice to Proceed. Except as otherwise indicated in this Provision or agreed in writing by the Engineer, the Design-Build Team shall not use constraints. If at any time the Engineer approves the use of a constraint, the Design-Build Team shall provide written documentation of such to the NCTA.

(2) The Last Activity in the Schedule shall be identified as "Project Completion." The Design-Build Team shall plan the other activities in the schedule so that the expected finish of "Project Completion" is calculated to occur on the Contact Completion Date.

(3) The Design-Build Team shall plan its Work to meet all time-related requirements of the Contract. This includes but is not limited to: submittal review times, Milestones, Intermediate Contract Times, phasing requirements, and the date of Substantial Completion. The Design-Build Team shall include activities, within their CPM schedule, which represent reasonable durations for construction impacts or operations created by the Toll Integration Contractor performing their operations concurrently with the Design-Build Team's Work.

(4) The Design-Build Team shall include within the ICPM work activites that must be preformed prior to work being preformed on the same project by other Contractors or Design-Build Teams and under separate contract with the NCTA (Preceeding Work). Each activity that is considered Preceeding Work shall have an responsibility code assigned.

(5) The Design-Build Team shall identify all the components of the Work and the work of others on the Project as activities in the ICPM. If the Engineer cannot identify an item of the Work as an activity or as part of an activity in the schedule, then that item of the Work will be considered incidental.

(6) The Design-Build Team shall designate the following for each activity in the ICPM.

    (a) A unique alpha numeric activity ID

(b) A description of the work associated with each activity ID

(c) A duration

(i) The Design-Build Team shall limit construction activities to a maximum of 20 workdays duration. The Design-Build Team shall subdivide activities expected to take longer than 20 days so as to provide more detail and to meet this requirement. If for any reason this requirement cannot be achieved, the Design-Build Team shall provide a written request to the Engineer, explaining the reasoning for the need to have a duration over 20 workdays. Upon approval, the Design-Build Team shall forward the request to the NCTA. Any duration provided by NCTA, utilities, or other government agencies shall be exempt from this requirement. Waiting times for plant growth cure times, material procurement, and other activities assigned a zero dollar value and no assignment of responsibility are also exempt from this requirement.

(ii) The Design-Build Team shall limit design activities to the required design submittal intervals or a maximum of 90 days, whichever is shorter. The Design-Build Team shall subdivide activities expected to take longer so as to provide more detail.

(iii) All activities with a dollar value greater than zero shall have a duration assigned to it, even if the duration is equal to zero.

(d) Predecessors – Each activity except for "Notice to Proceed" shall have at least one predecessor.

(e) Successors – Each activity except for "Final Completion" shall have at least one successor.

(f) Activity Calendar – The Activity Calendar shall clearly identify the days when work could be performed on the activity and the days when work cannot be performed on the activity, in addition to the amount of hours per day for a given workweek.

(g) Activity Code – Each activity in the schedule shall be assigned an activity code for the following categories:

(i) Area of the Project
(ii) Structure within the Area of the Project
(iii) Phase of the Project
(iv) Division of Work
(v) Work Type
(vi) Responsibility for the Work

- The Design-Build Team shall identify the entity responsible to perform each activity in the schedule. Examples might include a particular subcontractor, NCTA, the Design-Build Team, a design consultant, a utility company, etc.
- If more than one entity is performing a particular activity, then the activity code shall identify both entities.

- When the ICPM is submitted, the Design-Build Team shall provide a list to the Engineer of each activity code that assigns responsibility to entities that are not under the control of the Design-Build Team.

(vii) Categories and Groupings

- The Design-Build Team shall assign different categories for items in separate Divisions within the NCDOT Standard Specifications for Roads and Structures and at least one type of work shall be classified as punch work.
- The Design-Build Team shall choose a method of identifying the type of work that shall clearly communicate to the Engineer the nature of the work being performed.
- Each activity shall have an activity code assigned to it representing the Area of the Project, Structure, Phase, Division, Worktype, and Responsibility in order for the schedule to be filtered by activity code.

(h) Value of the Work

(i) The Design-Build Team shall assign an accurate dollar value to each activity based on a reasonable assignment of the value of that work when compared to the overall work being performed on the Project.

(ii) The Design-Build Team shall not assign a dollar value to an activity less than the estimated cost to perform that work.

(iii) The Design-Build Team shall not assign a dollar value to the work being performed by NCTA or other third parties.

(iv) Activities scheduled to occur early in the Project shall be assigned the same or lesser value than similar activities scheduled to occur later in the Project, unless otherwise approved.

(v) The Design-Build Team shall limit the value of an activity to $500,000. The Design-Build team shall subdivide activities with anticipated values over $500,000 into 2 or more activities to meet this requirement. Mobilization, some design activities, and materials procurement activities are exempt from this $500,000 requirement.

(vi) The Design-Build Team shall assign activities in the schedule representing tasks incidental to the performance of the Work a value of zero dollars.

(vii) Activities may be assigned a value of zero dollars when appropriate. Examples include the work of others, or tasks performed by subcontractors for which the contractor has no cost.

(viii) Each Activity in the Schedule shall be cost loaded so that the sum of the budgeted total costs for each activity equals to the Total Contract Value. The budgeted total costs for each activity shall not change once the ICPM is approved as the First Schedule of Record, unless authorized in writing by NCTA.

(ix) Any work performed that is not identified in the schedule will have a value of zero dollars.

(x) Any activities that are incidental will have a value of zero dollars.

(xi) The Design-Build Team shall be limited to five percent of the total amount bid for the entire Project for “Mobilization” as detailed in Section 800 of the Project Special Provisions.

(xii) The Design-Build Team shall assign activities to both erosion and sedimentation control device installation and device maintenance. The activity for erosion and sedimentation control device maintenance shall span the duration of the contract and shall be cost-loaded in a linear manner.

(xiii) The Design-Build Team shall assign at least one-half of one percent of the total amount bid for the entire Project to the activity or activities representing punch work.

(xiv) All costs assigned to activities will be evaluated on a linear basis with regard to payment unless a payment curve is provided and approved. Such curves shall be agreed to in the baseline schedule and will not change unless authorized in writing by NCTA.

(7) The Design-Build Team shall assign each activity in the ICPM at least one predecessor and one successor, except the first activity, "Notice to Proceed," and the last activity, "Project Completion."

(8) The Design-Build Team shall not use start-to-finish relationships to connect predecessor and successor activities.

(9) The Design-Build-Team shall limit the use of start-to-start and finish-to-finish relationships to connect predecessor and successor activities. The Schedule Representative shall explain to the Engineer why a start-to-start or finish-to-finish relationship was used upon the Engineer's request. This information shall also be forwarded to the NCTA.

(10) The Design-Build Team shall produce a schedule that does not contain open-ended activities, except for the first and last activity in the schedule.

(11) The Design Team shall not use negative lags in the schedule. The Design-Build Team shall limit the use of lags in the schedule and shall not use a lag greater than 5 days. The Schedule Representative shall explain to the Engineer why a lag was used. This information shall also be forwarded to the NCTA.

The Design-Build Team shall use the scheduling software to calculate the following data for each activity in the schedule:

(a) Early Start
(b) Early Finish
(c) Late Start
(d) Late Finish
(e) Total Float
(f) Free Float

(12) The longest path shall be dictated by schedule logic and durations, not by the leveling of resources or cost information.

(13) The Design-Build Team shall be required to submit a written narrative with the ICPM. The Design-Build Team shall explain in its written narrative the planned sequence of the Work, the critical path, proposed phasing for the Project, the activity calendars, maintenance of traffic, milestone dates, labor and equipment resources, and the estimated payouts by month and by phase. In addition, the Design-Build Team shall explain in its written narrative how it has provided for procurement of materials,

weather, permitting requirements, environmental requirements, coordination with other contractors, coordination with local municipalities, coordination with Toll Integration Contractor, coordination with NCTA's right of way Agent, work to be performed in whole or in part by Department or other government agencies, work to be performed by the utility companies, and any other scheduling assumptions made by the Design-Build Team.

The Engineer will review the ICPM submitted by the Design-Build Team for compliance with the requirements of the Contract. The Engineer may reject the ICPM if it does not adhere to the requirements of the Contract. The Engineer may reject the ICPM if it makes unreasonable demands on the Department or third parties on the Project without their written acknowledgement or agreement to such demands or requirements. Examples of unreasonable demands might include the simultaneous review of numerous submittals, short durations for utilities to perform work, shutting down adjacent roadways, or limiting access to private land owners. The Engineer may reject a schedule that over-utilizes start-to-start and finish-to-finish relationships to connect predecessor and successor activities if, in the opinion of the Engineer, the use of these logic relationships obscures the relationships between activities. The Engineer may reject a schedule that over-utilizes lags, if in the opinion of the Engineer, lags are being used to replace necessary activities or obscuring how one activity relates to the next.

The Engineer will also review the values assigned to the activities in the ICPM for balance. The Engineer may reject the ICPM if the dollar value assigned to any specific activity exceeds the Engineer's estimate by more than 40% or $100,000. The Engineer may reject the ICPM if, in the opinion of the Engineer, the values assigned to activities expected to be completed early in the Project exceed the value assigned to the same or similar activities expected to finish late in the Project, without explanation.

The Design-Build Team is responsible for the timely preparation of an ICPM that fully complies with the requirements of this Provision and the Contract. The Engineer may take action under Articles 108-7 and 108-9 of the Standard Special Provision, Division One if the Design-Build Team has not prepared an acceptable ICPM within 180 days from the Notice to Proceed.

(E) Schedule Updates

As the basis of its payment application request and as a requirement of this Provision, the Design-Build Team shall submit electronically to the Engineer a regular update to the CPM of Record using accepted scheduling practices. The Engineer will determine the frequency and date of the Schedule Updates – not to exceed two updates per month and to occur at least once within any 35 day period. The Design-Build Team shall continue to provide the Engineer schedule updates until the final schedule is approved with 100% completion of all activities and all the Work on the Project. The Design-Build Team shall submit a Schedule Update within 7 days of its data date. The NCTA shall review the payment application and provide a response to the DBT within 7 calendar days of the submission. Upon the Engineer's acceptance, the Schedule Update will become the new CPM of Record, replacing

the previous CPM of Record, and will be considered used from its data date until the data date of the next schedule accepted by the Engineer.

The Design-Build Team shall incorporate the following information into the previous CPM of record and submit this as its schedule update:

(1) An updated data date

(2) The actual start of any activity that started prior to the data date of the Schedule Update

(3) The actual finish of any activity that finished prior to the data date of the Schedule Update

(4) The new remaining duration of any activity that began, but did not finish prior to the data date of the schedule update.

(5) The percent complete for every activity in the schedule. The Design-Build Team shall use both activity percent complete and resource percent complete for activities representing the purchase of materials, and shall identify the resource percent complete of activities representing the purchase of materials for undelivered; delivered or fabricated; or installed material as 0%, 95% or 100% complete, respectively.

(6) The Design-Build Team shall use the scheduling software to calculate the following data for each of the remaining activities in the Schedule Update:

(a) Early Start
(b) Early Finish
(c) Late Start
(d) Late Finish
(e) Total Float
(f) Free Float

The Design-Build Team shall provide a schedule update narrative as part of the Schedule Update, in addition to any of the other requirements identified in Article 109-4 of the Standard Special Provision, Division One for partial payment requests. The Design-Build Team shall include in the schedule update narrative a description of the Work performed during the update period; the status of any outstanding permits; the current critical path; any delays or disruptions experienced during the update period to Intermediate Contract Dates, Substantial Completion, and/or Final Completion; any change in planned manpower or equipment; any foreseeable delays or disruptions; and any "Minor Revisions" made during the update period that have previously been accepted by the Engineer. A discussion of delays in the Schedule Update's narrative shall not constitute a written request for additional time or notice of intent to file a claim as required by the Contract.

The Design-Build Team shall not incorporate any revisions into a Schedule Update unless the revisions are minor and have been previously accepted by the Engineer. Any documentation regarding the Minor Revisions shall be submitted to the NCTA. The schedule update narrative shall include documentation of any revisions previously verbally approved by the Engineer.

If the Design-Build Team chooses to revise the CPM of Record, the revised schedule shall be submitted separately from the progressed schedule. The revised schedule shall have the

same data date as the most recent Schedule of Record and reflect the progress achieved up to that point in time.

The Engineer may reject a Schedule Update that incorporates revisions that were not previously accepted by the Engineer, may reject a schedule update that includes actual dates on or after the data date, and may reject a Schedule Update that records incomplete or incorrect information on the progress of the Work.

(F) Revisions to the CPM of Record

The Design-Build Team may revise the CPM of Record. A revision to the CPM of record is defined as one or more of the following:

(1) A change in the original duration of an activity
(2) An increase in the remaining duration of an activity
(3) A change in the logic of the schedule
(4) A change to any actual date previously recorded and provided to the Engineer
(5) The deletion or addition of an activity
(6) A change to, addition of, or deletion of a constraint
(7) A change to, addition of, or deletion of an activity code
(8) A change to an activity description
(9) A change to the dollar value assigned to an activity
(10) Any other change other than updating progress or recording actual dates.

A minor revision is defined as a revision that does not affect the critical path of the Work on the Project, does not affect work activities that may soon become critical, does not significantly affect third parties, does not significantly affect the Department, and does not increase or lower the dollar values assigned to the activities in the schedule. For minor revisions, the Schedule Representative shall contact the Engineer and explain the revision. If the Engineer determines that the revision is minor, the Engineer can verbally accept the revision. The Design-Build Team shall incorporate revisions verbally accepted by the Engineer into the next Schedule Update. The Engineer's determination as to whether a revision is minor or major shall be final.

All revisions that are not minor revisions are major revisions. For major revisions, the Design-Build team shall submit to the Engineer a revised CPM that meets all the requirements of the ICPM and is updated to reflect current progress. The Design-Build Team shall submit any revised CPM within 7 days of its data date unless otherwise agreed by the Engineer. The Design-Build Team shall include a narrative with the revised CPM describing <u>each</u> revision and the reason for <u>each</u> revision. Every revision that was made to the revised schedule shall be listed in the narrative. The Design-Build Team shall also include in the narrative any foreseeable problems that may need to be overcome when implementing the revision. A discussion of delays and potential delays in the revised CPM's narrative shall not constitute a written request for additional time or satisfy any requirement for written notice to file a claim as required by the Contract.

If the Design-Build Team is re-allocating the dollar values assigned to activities, it shall include for the Engineer's review a list of the activities affected by the revision, a list of any

new activities added or deleted, and the difference in dollar value assigned to each activity. For changed Work where the dollar value is disputed, the Design-Build Team shall assign dollar values to its work activities as directed by the Engineer, but shall include the designation "D-C" at the beginning of the activity's description for each activity affected by the change. For changes settled through a Supplemental Agreement, the Design-Build Team shall assign the agreed dollar amount among the new or existing activities, and shall include the designation SA# (where # represents the number of the Supplemental Agreement) at the beginning of the activity's description for each activity affected by the change.

Within 7 days or submittal, the Engineer shall accept or reject proposed revision(s). Upon the Engineer's acceptance, the revised CPM will become the CPM of Record, and will be used from its data date until the data date of the next schedule accepted by the Engineer.

NCTA will not pay additional costs for revisions to the CPM regardless of what condition or change prompted the revision(s). The cost to create, revise, and update the CPM is an administrative requirement included as part of the Contract Lump Sum Price. The Design-Build Team shall allocate sufficient resources to timely administer the schedule as required.

The Engineer will accept revisions that appear to accurately reflect the Design-Build Team's current plan for completing the Work on the Project. The Engineer may accept a revised CPM that indicates the Project is currently expected to finish earlier or later than required by the Contract. However, the Engineer's acceptance of the Design-Build Teams' schedules does not relieve the Design-Build Team from its obligations to perform under the terms of the contract including completion of the Work within the contract time; or as granting, rejecting, or in any way acting on the Design-Build Team's requests for adjustment to the date for completion of the Work.

The Engineer may reject any revision that does not, in the opinion of the Engineer, accurately reflect the Design-Build Team's current plan of construction; the Engineer may reject any revision that requires additional or revised actions on the part of third parties or the Department; the Engineer may reject a revision that changes the dollar value assigned to an activity, unless the Design-Build Team has correctly allocated this amount into new activities for additional detail; the Engineer may reject any revision that materially alters the projected payout of the Project; and the Engineer may reject any revised CPM submitted more than 7 days after its data date unless the Engineer had previously agreed to waive this requirement.

(G) Use of the CPM of Record to Assess Project Delays

If the Design-Build Team submits a written request for an extension to the contract time in accordance with Article 108-10 of the Project Special Provisions, the Engineer will rely upon the CPM of Record in effect at the time the delay is recognized or occurs, whichever is sooner, to assess the effects of changes and revisions or other potential causes of delay to the Scheduled Completion Date.

For purposes of calculating and withholding anticipated liquidated damages as identified in Articles 108-8 and 109-4, the Engineer will rely on the Scheduled Completion Date identified in the CPM of Record.

Page 1-65, delete Article 108-3 and replace with the following:

108-3 PRECONSTRUCTION AND PRE-DESIGN CONFERENCES

The selected Design-Build Team shall meet with the Engineer for a pre-design conference concerning the design phase of the work. This conference shall be held prior to the commencement of work, as it is determined according to Article 108-1, and will be scheduled by the Engineer. At the predesign conference, the Design-Build Team shall furnish authorized signature forms and a list of any proposed subcontractors associated with the design of the project.

A preconstruction conference shall be held at least 10 working days before construction activity begins. This second conference, concerning the construction phase, shall also be scheduled by the Engineer. The Design-Build Team shall give the Engineer a minimum of 45 days notice before he plans to begin construction activities. This will allow the Engineer time for any environmental agency representatives involved in the permitting process, as well as any other pertinent entities, to be scheduled to attend the preconstruction conference. If the Design-Build Team is responsible for utilities in accordance with Article 105-8 and the Request for Proposals, he shall be responsible for coordinating with the Engineer in scheduling their attendance and for notifying them. The Design-Build Team shall also be responsible for coordinating with the Engineer in scheduling the attendance of subcontractors and others deemed appropriate, and for notifying them.

At the preconstruction conference, a list of any proposed subcontractors and major material suppliers associated with the construction of the project will be submitted.

If the contract has a DBE requirement, the Design-Build Team shall submit copies of completed and signed DBE subcontracts, purchase orders, or invoices to the Department.

The Design-Build Team shall submit a traffic control plan in accordance with Article 1101-5 and the Request for Proposals. The Design-Build Team shall designate an employee who is competent and experienced in traffic control to implement and monitor the traffic control plan. The qualifications of the designated employee must be satisfactory to the Engineer.

The Design-Build Team shall submit a safety plan and designate an employee as Safety Supervisor.

Both plans shall be submitted at the preconstruction conference and must be satisfactory to the Engineer. Should the design plan include activities that would place personnel on the work site, traffic control and safety plans for those activities shall be submitted at the predesign conference.

During the preconstruction conference, the Engineer will designate a Department employee or employees who will be responsible to see that the traffic control plans and any alterations thereto are implemented and monitored to the end that traffic is carried through the work in an effective

manner. If approved by the Engineer, the Design-Build Team may designate one employee to be responsible for both the traffic control and safety plans. The Design-Build Team shall not designate its superintendent as the responsible person for either the traffic control plan or the safety plan, unless approved by the Engineer.

If the project requires that Design-Build Team or State personnel work from falsework, within shoring, or in any other hazardous area the Design-Build Team shall submit, as part of the Design-Build Team's safety plan, specific measures it will use to ensure worker safety.

The Design-Build Team shall also submit a program for erosion control and pollution prevention on all projects involving clearing and grubbing, earthwork, structural work, or other construction, when such work is likely to create erosion or pollution problems.

If the Design-Build Team fails to provide the required submissions, the Engineer may order the preconstruction conference suspended until such time as they are furnished. Work shall not begin until the preconstruction conference has been concluded and the safety plan has been approved, unless authorized by the Engineer. The Design-Build Team shall not be entitled to additional compensation or an extension of contract time resulting from any delays due to such a suspension.

The Design-Build Team shall designate a qualified employee as Quality Control Manager. The Quality Control Manager shall be responsible for implementing and monitoring the quality control requirements of the project.

Page 1-65, Article 108-4, add the following sentence to the end of this article:

The Design-Build Team shall record the proceedings of these conferences and distribute the final minutes of the conferences to all attendees within 10 calendar days of the conference.

Page 1-66, Article 108-6, replace “40%” with “30%” in the 1st paragraph.

Page 1-66, Article 108-6, replace “35%” with “25%” in the 2nd paragraph.

Pages 1-68, delete Article 108-8 and replace with the following:

108-8 FAILURE TO MAINTAIN SATISFACTORY PROGRESS

The Engineer shall utilize the Cost-Loaded Critical Path Method Project Schedule to evaluate the Design-Build Team’s progress at the time each partial pay request and schedule update is submitted. The Design-Build Team’s progress shall be considered behind if, according to the CPM Schedule of Record, the Scheduled Completion Date exceeds the Contract Completion Date. For purposes of calculating and withholding anticipated liquidated damages as identified in Article 109-4, the Engineer will rely on the Scheduled Completion Date identified in the CPM of Record.

The Design-Build Team’s progress will be considered unsatisfactory if the CPM of Record, Scheduled Completion Date falls behind the Contract Completion Date by more than 5% of the Contract Time and anticipated liquidated damages shall be withheld immediately.

When the Design-Build Team's progress is found to be unsatisfactory as described above, the Engineer may make written demand of the Design-Build Team to state in writing the reason for the unsatisfactory progress and produce such supporting data as the Engineer may require or the Design-Build Team may desire to submit. The Engineer will consider the justifications submitted by the Design-Build Team and extensions of the completion date that have or may be allowed in accordance with Article 108-10(B).

When the Design-Build Team cannot satisfactorily justify the unsatisfactory progress, the Engineer may invoke one or more of the following sanctions:

(1) Remove the Design-Build Team and individual managing firms of the Design-Build Team and/or prequalified design firms from consideration for future Department projects.

(2) Notify the Department of Transportation of such action and possibly make recommendation to the Department of Transportation that the Design-Build Team and individual managing firms of the Design-Build Team and/or prequalified design firms be removed from the Department of Transportation's Prequalified Bidders List, Approved Subcontractors List, and/or the Prequalified List of Private Consulting Firms.

When any of the above sanctions have been invoked, they shall remain in effect until rescinded by the Engineer.

Page 1-70, Article 108-10, replace the entire article with the following:

108-10 CONTRACT TIME; INTERMEDIATE CONTRACT TIME

(A) General

The contract time will be as defined in Section 101. No extensions to the completion date will be authorized except as allowed by this article. No modifications in the date of availability will be made for any reason whatsoever.

Intermediate contract time, as defined in Section 101 will be that as allowed in the contract to complete a part, portion, or phase of the total work covered in the contract. Intermediate completion dates and intermediate completion times set forth in the contract may be extended on the same basis as completion dates and as described in this article.

When the liquidated damages stipulated in the contract are to be on an hourly basis, extensions as described in this article will be considered on an hourly basis.

The Engineer will rely upon the CPM of Record in effect at the time the delay is recognized or occurs, whichever is earlier, to assess the effects of changes and revisions or other potential causes of delay to the Scheduled Completion Date.

The Engineer will use the CPM and the following guidelines to assess delays to the Project:

(1) The controlling operation of the Work is the first activity on the CPM of Record.

(2) The Engineer will not grant a time extension for delays that result from schedule revisions of any sort, unless the revisions are necessary to mitigate unforeseeable and otherwise excusable delays, the revisions are required to incorporate changes to the Work agreed to by the Engineer, or the revisions are expressly requested by the Engineer to accommodate NCTA.

(3) The Design-Build Team creates the CPM and is responsible for the accuracy and reliability of the CPM. The Engineer will not grant a time extension for delays that result from improper planning, incorrect sequences, scheduling errors, scheduling omissions, missing portions of the Work in the schedule, or any other cause related to the Design-Build Team's failure to properly manage and schedule the Work or the work of others. The Engineer will not consider a request for additional time from the Design-Build Team that relies on the assumption that the CPM of Record was inaccurate or erroneous.

(4) When there are two or more causes for a critical delay, or in the case that two paths of activities are concurrently critical, the Engineer will only grant a time extension if all the causes for the critical delay are determined to be excusable.

(5) The critical path is dynamic. The Engineer will assess the critical path on each day of an alleged delay. Only delays to the critical path will be eligible for consideration of a time extension.

(6) The Engineer will use the CPM of Record in effect at the time of the delay to assess Project delays. The Engineer will not use rejected schedules, later approved schedules, or new schedules, including "impacted" or "collapsed schedules" to assess a delay to the Project.

(7) Float belongs to the Project and is shared between the Design-Build Team and NCTA on a first-come, first-served basis until it is depleted.

(B) Completion Date, Intermediate Completion Date, and Intermediate Completion Time Extensions

Only delays to activities which affect the completion date or intermediate contract date will be considered for an extension of contract time. No extensions will be granted until a delay occurs which impacts the project's critical path, consumes all available float, and extends the work beyond the contract completion date or intermediate completion date. Any extension to the completion date or intermediate contract date will be based on the number of calendar days the completion date or intermediate completion date is impacted as determined by the Engineer's analysis. No extension of the completion date, intermediate completion date, or intermediate completion time will be allowed for any reason except as provided for below:

(1) If the Design-Build Team's current controlling operation(s) are delayed by circumstances originating from work required under the contract and beyond his control and without his fault or negligence, he may, at any time prior to payment of the final estimate, make a written request to the Engineer for an extension of the completion date, intermediate completion date, or intermediate completion time. This request shall include:

(a) the circumstances resulting in the alleged delay and documentation of said circumstances as may be required by the Engineer,

(b) the controlling operation(s) alleged to have been delayed,

(c) the calendar dates or calendar dates and times on which the controlling operation(s) were delayed and

(d) the number of calendar days or hours by which he is requesting the completion date, intermediate completion date, or intermediate completion time to be extended.

If the Engineer determines that the controlling operation(s) were delayed because of circumstances beyond the control of and without the fault or negligence of the Design-Build Team, and that the Design-Build Team has pursued the work in accordance with Article 108-1, he will extend the completion date, intermediate completion date, or intermediate completion time unless otherwise precluded by other provisions of the contract. No extension of the completion date, intermediate completion date, or intermediate completion time will be allowed for delays caused by restrictions, limitations or provisions contained in the contract.

Consideration will be given for an extension in the completion date, intermediate completion date, or intermediate completion time involving an intermediate contract time of more than 96 hours if the Design-Build Team's current controlling operation(s) is delayed in excess of 8 percent of the total contract time (days), as defined in Section 101, the total intermediate contract time (days), as defined in Section 101, or the total intermediate contract time (hours), as defined in Section 101; due to weather or conditions resulting from weather. No other consideration will be given for extensions in the completion date, intermediate completion date, or intermediate completion time due to delays caused by weather.

Where the intermediate contract time is 96 hours or less, no consideration whatsoever will be given for an extension in the intermediate completion time due to weather or conditions resulting from weather.

(2) If changes in the work from that originally contemplated in the contract are ordered by the Engineer and these changes result in reduction in quantities, elimination of items, additional work and/or extra work, the Engineer will allow an extension in the completion date, intermediate completion date, or intermediate completion time as he may deem warranted by such changes. Pursuit of the work with adequate forces and equipment and efficiency of the Design-Build Team's operations will be considered by the Engineer in determining an extension in the completion date, intermediate completion date, or intermediate completion time. It is, however, the Design-Build Team's responsibility to show just cause for an extension in the completion date, intermediate completion date, or intermediate completion time due to the aforesaid conditions.

The Design-Build Team's plea that insufficient contract time (days), intermediate contract time (days), or intermediate contract time (hours) was specified in the contract will not be

considered as a valid reason for an extension in the completion date, intermediate completion date, or intermediate completion time.

When all work on the project is totally complete, with the exception of an item or items on which work is precluded by seasonal limitations set forth in the contract, the Engineer may, provided that the Design-Build Team has diligently pursued the work with adequate forces and equipment, waive the assessment of liquidated damages during the period of time from the date all work other than that precluded by seasonal limitations was completed until the date of expiration of the seasonal limitations. The Design-Build Team shall make the request to waive the assessment of liquidated damages in writing prior to the beginning date of the requested waiver. The non-assessment of liquidated damages during the aforesaid period shall not operate to waive any other liquidated damages that may be assessable or any other terms of the contract.

Page 1-75, Article 108-13, delete bullet (E)(2) in its entirety.

SECTION 109
MEASUREMENT AND PAYMENT

Page 1-76, Article 109-2, delete the last sentence of the 1st paragraph and replace with the following:

Payment to the Design-Build Team will be made only for the work completed, certified and accepted in accordance with the terms of the contract.

Page 1-76, Article 109-3, insert the following as the second paragraph:

The Engineer may adjust the Contract Lump Sum Amount bid for the entire project for Work which is reduced or eliminated as a direct result of the force account work. Such adjustments will be made in accordance with the provisions herein.

Pages 1-81, delete Article 109-4(A) and replace with the following:

109-4 PARTIAL PAYMENTS

(A) General

The Turnpike Authority will make partial payments based upon the Engineer's review of the Design-Build Team's payment requests. The Design-Build Team will prepare a payment request at least once each month on the date established by the Engineer. If in the judgment of the Engineer the amount of work performed is sufficient to warrant, the Engineer may accept from the Design-Build Team payment requests twice each month. The Turnpike Authority will not make a partial payment when the total value of work performed since the last partial payment, excluding mobilization, amounts to less than $10,000.00.

The Engineer may correct partial payments at any time prior to final payment. This will include corrections to the progress of the Work and the amount of the partial payment. The Engineer's adjustments on partial payments are final.

The Design-Build team shall use the most recent accepted cost-loaded CPM to estimate the value of the work performed and will submit this estimate as its payment request to the Engineer. The Design-Build Team shall submit the estimate of the value of the Work performed and the updated cost-loaded Schedule for each partial payment request. Failure to submit either part of the partial payment request will result in the Engineer withholding payment. With each payment request, the Design-Build Team shall certify that it has reviewed the cost-loaded CPM, that the payment request presents an accurate assessment of the level of completion of each work activity for which payment is being sought, and that the dollar value assigned to each work activity is reasonable and consistent with the dollar values assigned to all other work activities.. The Engineer will only accept payment requests that have been certified by the Design-Build Team.

The Design-Build Team will maintain and update the cost-loaded CPM as further described in Article 108-2 of this Special Provision.

If an Interim Schedule was submitted in accordance with Article 102-2 this Schedule was accepted by the Engineer, the Design-Build Team may estimate the value of the work performed using the Interim Schedule for the first 90 days after the Notice of Proceed. After 90 days, the Engineer will not process partial payment requests until the Design-Build Team develops a cost-loaded, initial CPM and the Engineer accepts this schedule.

If the Design Build Team did not submit an Interim Schedule acceptable to the Engineer, NCTA will issue payments for the mobilization costs (reference Article 800-2 of the Standard Specifications and the Project Special Provision, Mobilization), but will not otherwise process partial payment requests until the Design-Build Team submits an cost-loaded, Initial CPM and this CPM is accepted by the Engineer. The Design-Build Team's failure to develop an acceptable, cost-loaded Initial CPM may result in the Engineer withholding payment.

The Engineer will withhold from the partial payments amounts sufficient to cover any anticipated liquidated damages as determined by the Engineer as provided in Articles 108-8 and 109-4.

NCTA will not pay interest to the Design-Build Team on payments that are withheld in accordance with the requirements of this Special Provision or any other provision of the contract. The Design-Build Team is not entitled to payment, damages, or any other form of compensation due to the withholding of partial payments in accordance with the requirements of this Special Provision or any other provision of the contract.

Page 1-82, Subarticle 109-5(D), delete the 4th and 5th paragraphs and replace with the following:

Partial payments will not be made on seed or any living or perishable plant materials.

Partial payment requests shall not be submitted by the Design-Build Team until those items requested have corresponding signed and sealed RFC plans accepted by the Department.

Page 1-84, Article 109-10, replace the first paragraph with the following:

Submit the following documents to the Engineer within 120 days after the contract Final Acceptance Date, as defined in Article 101-3. Failure to submit the notice required by Subarticle 109-10(C), the final claim information, within the 120 days after the Final Acceptance Date, shall be a bar to recovery for any extension in the completion date or any adjustment in compensation from that shown in the final estimate.

Pages 1-84, Article 109-10, add the following as bullets (E) and (F) under the 1st paragraph.

(E) As-constructed plans or other submittals as required by the Contract.

(F) Documents or guarantees to support any warranty provided by the Design Build Team.

ITEMIZED PROPOSAL FOR CONTRACT NO. C202697

County : Mecklenburg, Gaston

Line #	Item Number	Sec #	Description	Quantity	Unit Cost	Amount
			ROADWAY ITEMS			
0001	0000900000-N	SP	GENERIC MISCELLANEOUS ITEM DESIGN, CONSTRUCTION & INSPECTION	Lump Sum	L.S.	

0839/Nov08/Q1.0/D900000/E1

Total Amount Of Bid For Entire Project :

FUEL USAGE FACTOR CHART AND ESTIMATE OF QUANTITIES

Description of Work	Units	Fuel Usage Factor Diesel #2	Estimate of Quantities
Unclassified Excavation	Gal / CY	0.29	_____ CY
Borrow Excavation	Gal / CY	0.29	_____ CY
Class IV Subgrade Stabilization Aggregate Base Course Aggregate for Cement Treated Base Course Portland Cement for Cement Treated Base Course	Gal / Ton	0.55	_____ Tons
Asphalt Concrete Base Course Asphalt Concrete Intermediate Course Asphalt Concrete Surface Course Open-Graded Asphalt Friction Course Sand Asphalt Surface Course, Type F-1	Gal / Ton	2.90	_____ Tons
Portland Cement Concrete Pavement Concrete Shoulders Adjacent to Pavement	Gal / CY	0.98	_____ CY
Structural Concrete (Cast-in-Place Only)	Gal / CY	0.98	_____ CY

☐ The above quantities represent a reasonable estimate of the total quantities anticipated, for each item, as pertaining to fuel price adjustments, and is representative of the design proposed in the Technical Proposal submitted under separate cover.

Or

☐ The Design-Build Team elects not to pursue reimbursement for Fuel Price Adjustments on this project.

The information submitted on this sheet is claimed as a "Trade Secret" in accordance with the requirements of G.S. 66-152(3) until such time as the Price Proposal is opened.

_____ _____
Signature, Title Dated

_____
Print Name, Title

(Submit a copy of this sheet in a separate sealed package with the outer wrapping clearly marked "Fuel Price Adjustment" and deliver with the Technical and Cost Proposal.)

LISTING OF DBE SUBCONTRACTORS

Sheet _____ of _____

Firm Name and Address	Item No.	Item Description	* Agreed upon Unit Price	** Dollar Volume of Item
Name Address				
Name Address				
Name Address				
Name Address				
Name Address				
Name Address				
Name Address				

This form must be completed in order for the Bid to be considered responsive and be publicly read.
Bidders with no DBE participation must so indicate this on the form by entering the word or number *zero*.

LISTING OF DBE SUBCONTRACTORS

Sheet _____ of _____

Firm Name and Address	Item No.	Item Description	* Agreed upon Unit Price	** Dollar Volume of Item
Name Address				
Name Address				
Name Address				
Name Address				
Name Address				
Name Address				
Name Address				

This form must be completed in order for the Bid to be considered responsive and be publicly read.
Bidders with no DBE participation must so indicate this on the form by entering the word or number *zero*.

LISTING OF DBE SUBCONTRACTORS Sheet _____ of _____

Firm Name and Address	Item No.	Item Description	* Agreed upon Unit Price	** Dollar Volume of Item
Name Address				
Name Address				
Name Address				
Name Address				
Name Address				
Name Address				
Name Address				

This form must be completed in order for the Bid to be considered responsive and be publicly read.
Bidders with no DBE participation must so indicate this on the form by entering the word or number *zero*.

LISTING OF DBE SUBCONTRACTORS

Sheet _____ of _____

Firm Name and Address	Item No.	Item Description	* Agreed upon Unit Price	** Dollar Volume of Item
Name Address				
Name Address				
Name Address				
Name Address				
Name Address				

* The Dollar Volume shown in this column shall be the Actual Price Agreed Upon by the Prime Contractor and the DBE subcontractor, and these prices will be used to determine the percentage of the DBE participation in the contract.

** Dollar Volume of DBE Subcontractor $ _____

Percentage of Total Contract Bid Price _____ %

(Including Right-of-Way Acquisition Services)

** - Must have entry even if figure to be entered is zero.

** - *If firm is a Material Supplier Only, show Dollar Volume as 60% of Agreed Upon Amount from Letter of Intent.*
If firm is a Manufacturer, show Dollar Volume as 100% of Agreed Upon Amount from Letter of Intent.

This form must be completed in order for the Bid to be considered responsive and be publicly read.
Bidders with no DBE participation must so indicate this on the form by entering the word or number *zero*.

EXECUTION OF BID
NON-COLLUSION AFFIDAVIT, DEBARMENT CERTIFICATION AND GIFT BAN CERTIFICATION

CORPORATION

The person executing the bid, on behalf of the Bidder, being duly sworn, solemnly swears (or affirms) that neither he, nor any official, agent or employee of the bidder has entered into any agreement, participated in any collusion, or otherwise taken any action which is in restraint of free competitive bidding in connection with any bid or contract, that the bidder has not been convicted of violating *N.C.G.S. § 133-24* within the last three years, and that the Bidder intends to do the work with its own bonafide employees or subcontractors and is not bidding for the benefit of another contractor.

In addition, execution of this bid in the proper manner also constitutes the Bidder's certification of status under penalty of perjury under the laws of the United States in accordance with the Debarment Certification attached, provided that the Debarment Certification also includes any required statements concerning exceptions that are applicable.

N.C.G.S. § 133-32 and Executive Order 24 prohibit the offer to, or acceptance by, any State Employee of any gift from anyone with a contract with the State, or from any person seeking to do business with the State. By execution of any response in this procurement, you attest, for your entire organization and its employees or agents, that you are not aware that any such gift has been offered, accepted, or promised by any employees of your organization.

SIGNATURE OF CONTRACTOR

_____
Full name of Corporation

_____
Address as prequalified

Attest _____ By _____

Secretary/Assistant Secretary
Select appropriate title

President/Vice President/Assistant Vice President
Select appropriate title

_____
Print or type Signer's name

_____
Print or type Signer's name

CORPORATE SEAL

AFFIDAVIT MUST BE NOTARIZED

Subscribed and sworn to before me this the
_____ day of _____, 20_____

_____
Signature of Notary Public
Of _____County
State of _____
My Commission Expires _____

NOTARY SEAL

EXECUTION OF BID
NON-COLLUSION AFFIDAVIT, DEBARMENT CERTIFICATION AND GIFT BAN CERTIFICATION

PARTNERSHIP

The person executing the bid, on behalf of the Bidder, being duly sworn, solemnly swears (or affirms) that neither he, nor any official, agent or employee of the bidder has entered into any agreement, participated in any collusion, or otherwise taken any action which is in restraint of free competitive bidding in connection with any bid or contract, that the bidder has not been convicted of violating *N.C.G.S. § 133-24* within the last three years, and that the Bidder intends to do the work with its own bonafide employees or subcontractors and is not bidding for the benefit of another contractor.

In addition, execution of this bid in the proper manner also constitutes the Bidder's certification of status under penalty of perjury under the laws of the United States in accordance with the Debarment Certification attached, provided that the Debarment Certification also includes any required statements concerning exceptions that are applicable.

N.C.G.S. § 133-32 and Executive Order 24 prohibit the offer to, or acceptance by, any State Employee of any gift from anyone with a contract with the State, or from any person seeking to do business with the State. By execution of any response in this procurement, you attest, for your entire organization and its employees or agents, that you are not aware that any such gift has been offered, accepted, or promised by any employees of your organization.

SIGNATURE OF CONTRACTOR

_____
Full Name of Partnership

_____
Address as Prequalified

_____ By _____
Signature of Witness Signature of Partner

_____ _____
Print or type Signer's name Print or type Signer's name

AFFIDAVIT MUST BE NOTARIZED

Subscribed and sworn to before me this the
day of _____ 20_____.

_____
Signature of Notary Public

of _____County
State of _____
My Commission Expires:_____

NOTARY SEAL

EXECUTION OF BID
NON-COLLUSION AFFIDAVIT, DEBARMENT CERTIFICATION AND GIFT BAN CERTIFICATION

LIMITED LIABILITY COMPANY

The person executing the bid, on behalf of the Bidder, being duly sworn, solemnly swears (or affirms) that neither he, nor any official, agent or employee of the bidder has entered into any agreement, participated in any collusion, or otherwise taken any action which is in restraint of free competitive bidding in connection with any bid or contract, that the bidder has not been convicted of violating *N.C.G.S. § 133-24* within the last three years, and that the Bidder intends to do the work with its own bonafide employees or subcontractors and is not bidding for the benefit of another contractor.

In addition, execution of this bid in the proper manner also constitutes the Bidder's certification of status under penalty of perjury under the laws of the United States in accordance with the Debarment Certification attached, provided that the Debarment Certification also includes any required statements concerning exceptions that are applicable.

N.C.G.S. § 133-32 and Executive Order 24 prohibit the offer to, or acceptance by, any State Employee of any gift from anyone with a contract with the State, or from any person seeking to do business with the State. By execution of any response in this procurement, you attest, for your entire organization and its employees or agents, that you are not aware that any such gift has been offered, accepted, or promised by any employees of your organization.

SIGNATURE OF CONTRACTOR

_____
Full Name of Firm

_____
Address as Prequalified

Signature of Member/Manager _____
Individually

_____
Print or type Signer's Name

AFFIDAVIT MUST BE NOTARIZED

Subscribed and sworn to before me this the
_____ day of _____ 20__.

_____
Signature of Notary Public
of _____County
State of _____
My Commission Expires:_____

NOTARY SEAL

Rev. 7-12-10

EXECUTION OF BID
NON-COLLUSION AFFIDAVIT, DEBARMENT CERTIFICATION AND GIFT BAN CERTIFICATION
JOINT VENTURE (2) or (3)

The person executing the bid, on behalf of the Bidder, being duly sworn, solemnly swears (or affirms) that neither he, nor any official, agent or employee of the bidder has entered into any agreement, participated in any collusion, or otherwise taken any action which is in restraint of free competitive bidding in connection with any bid or contract, that the bidder has not been convicted of violating N.C.G.S. § 133-24 within the last three years, and that the Bidder intends to do the work with its own bonafide employees or subcontractors and is not bidding for the benefit of another contractor.

In addition, execution of this bid in the proper manner also constitutes the Bidder's certification of status under penalty of perjury under the laws of the United States in accordance with the Debarment Certification attached, provided that the Debarment Certification also includes any required statements concerning exceptions that are applicable.

N.C.G.S. § 133-32 and Executive Order 24 prohibit the offer to, or acceptance by, any State Employee of any gift from anyone with a contract with the State, or from any person seeking to do business with the State. By execution of any response in this procurement, you attest, for your entire organization and its employees or agents, that you are not aware that any such gift has been offered, accepted, or promised by any employees of your organization.

SIGNATURE OF CONTRACTORS

Instructions: **2 Joint Venturers** Fill in lines (1), (2) and (3) and execute. **3 Joint Venturers** Fill in lines (1), (2), (3) and (4) and execute. On Line (1), fill in the name of the Joint Venture Company. On Line (2), fill in the name of one of the joint venturers and execute below in the appropriate manner. On Line (3), print or type the name of the other joint venturer and execute below in the appropriate manner. On Line (4), fill in the name of the third joint venturer, if applicable and execute below in the appropriate manner.

(1) _____
Name of Joint Venture

(2) _____
Name of Contractor

_____
Address as prequalified

Signature of Witness or Attest	By	Signature of Contractor
Print or type Signer's name		Print or type Signer's name

If Corporation, affix Corporate Seal and

(3) _____
Name of Contractor

_____
Address as prequalified

Signature of Witness or Attest	By	Signature of Contractor
Print or type Signer's name		Print or type Signer's name

If Corporation, affix Corporate Seal and

(4) _____
Name of Contractor *(for 3 Joint Venture only)*

_____
Address as prequalified

Signature of Witness or Attest	By	Signature of Contractor
Print or type Signer's name		Print or type Signer's name

If Corporation, affix Corporate Seal

NOTARY SEAL
Affidavit must be notarized for Line (2)
Subscribed and sworn to before me this
_____day of_____ 20___
_____
Signature of Notary Public
of _____County
State of _____
My Commission Expires:_____

NOTARY SEAL
Affidavit must be notarized for Line (3)
Subscribed and sworn to before me this
_____day of _____ 20___
_____
Signature of Notary Public
of _____County
State of _____
My Commission Expires:_____

NOTARY SEAL
Affidavit must be notarized for Line (4)
Subscribed and sworn to before me this
____day of _____ 20_____
_____
Signature of Notary Public
of _____County
State of _____
My Commission Expires:_____

EXECUTION OF BID
NON-COLLUSION AFFIDAVIT, DEBARMENT CERTIFICATION AND GIFT BAN CERTIFICATION

INDIVIDUAL DOING BUSINESS UNDER A FIRM NAME

The person executing the bid, on behalf of the Bidder, being duly sworn, solemnly swears (or affirms) that neither he, nor any official, agent or employee of the bidder has entered into any agreement, participated in any collusion, or otherwise taken any action which is in restraint of free competitive bidding in connection with any bid or contract, that the bidder has not been convicted of violating *N.C.G.S. § 133-24* within the last three years, and that the Bidder intends to do the work with its own bonafide employees or subcontractors and is not bidding for the benefit of another contractor.

In addition, execution of this bid in the proper manner also constitutes the Bidder's certification of status under penalty of perjury under the laws of the United States in accordance with the Debarment Certification attached, provided that the Debarment Certification also includes any required statements concerning exceptions that are applicable.

N.C.G.S. § 133-32 and Executive Order 24 prohibit the offer to, or acceptance by, any State Employee of any gift from anyone with a contract with the State, or from any person seeking to do business with the State. By execution of any response in this procurement, you attest, for your entire organization and its employees or agents, that you are not aware that any such gift has been offered, accepted, or promised by any employees of your organization.

SIGNATURE OF CONTRACTOR

Name of Contractor _____
Individual name

Trading and doing business as _____
Full name of Firm

_____
Address as Prequalified

_____ _____
Signature of Witness Signature of Contractor, Individually

_____ _____
Print or type Signer's name Print or type Signer's name

AFFIDAVIT MUST BE NOTARIZED

Subscribed and sworn to before me this the
_____ day of _____ 20__.

_____
Signature of Notary Public
of _____County
State of _____
My Commission Expires:_____

NOTARY SEAL

EXECUTION OF BID

NON-COLLUSION AFFIDAVIT, DEBARMENT CERTIFICATION AND GIFT BAN CERTIFICATION

INDIVIDUAL DOING BUSINESS IN HIS OWN NAME

The person executing the bid, on behalf of the Bidder, being duly sworn, solemnly swears (or affirms) that neither he, nor any official, agent or employee of the bidder has entered into any agreement, participated in any collusion, or otherwise taken any action which is in restraint of free competitive bidding in connection with any bid or contract, that the bidder has not been convicted of violating *N.C.G.S. § 133-24* within the last three years, and that the Bidder intends to do the work with its own bonafide employees or subcontractors and is not bidding for the benefit of another contractor.

In addition, execution of this bid in the proper manner also constitutes the Bidder's certification of status under penalty of perjury under the laws of the United States in accordance with the Debarment Certification attached, provided that the Debarment Certification also includes any required statements concerning exceptions that are applicable.

N.C.G.S. § 133-32 and Executive Order 24 prohibit the offer to, or acceptance by, any State Employee of any gift from anyone with a contract with the State, or from any person seeking to do business with the State. By execution of any response in this procurement, you attest, for your entire organization and its employees or agents, that you are not aware that any such gift has been offered, accepted, or promised by any employees of your organization.

SIGNATURE OF CONTRACTOR

Name of Contractor _____

Print or type Individual name

_____

Address as Prequalified

_____

Signature of Contractor, Individually

_____

Print or type Signer's Name

_____

Signature of Witness

_____

Print or type Signer's name

AFFIDAVIT MUST BE NOTARIZED

Subscribed and sworn to before me this the
_____ day of _____ 20__.

_____

Signature of Notary Public
of _____County
State of _____
My Commission Expires:_____

NOTARY SEAL

DEBARMENT CERTIFICATION

Conditions for certification:

1. The prequalified bidder shall provide immediate written notice to the Department if at any time the bidder learns that his certification was erroneous when he submitted his debarment certification or explanation that is file with the Department, or has become erroneous because of changed circumstances.

2. The terms *covered transaction, debarred, suspended, ineligible, lower tier covered transaction, participant, person, primary covered transaction, principal, proposal,* and *voluntarily excluded,* as used in this provision, have the meanings set out in the Definitions and Coverage sections of the rules implementing Executive Order 12549. A copy of the Federal Rules requiring this certification and detailing the definitions and coverages may be obtained from the Contract Officer of the Department.

3. The prequalified bidder agrees by submitting this form, that he will not knowingly enter into any lower tier covered transaction with a person who is debarred, suspended, declared ineligible, or voluntarily excluded from participation in NCDOT contracts, unless authorized by the Department.

4. For Federal Aid projects, the prequalified bidder further agrees that by submitting this form he will include the Federal-Aid Provision titled *Required Contract Provisions Federal-Aid Construction Contract (Form FHWA PR* 1273) provided by the Department, without subsequent modification, in all lower tier covered transactions.

5. The prequalified bidder may rely upon a certification of a participant in a lower tier covered transaction that he is not debarred, suspended, ineligible, or voluntarily excluded from the covered transaction, unless he knows that the certification is erroneous. The bidder may decide the method and frequency by which he will determine the eligibility of his subcontractors.

6. Nothing contained in the foregoing shall be construed to require establishment of a system of records in order to render in good faith the certification required by this provision. The knowledge and information of a participant is not required to exceed that which is normally possessed by a prudent person in the ordinary course of business dealings.

7. Except as authorized in paragraph 6 herein, the Department may terminate any contract if the bidder knowingly enters into a lower tier covered transaction with a person who is suspended, debarred, ineligible, or voluntarily excluded from participation in this transaction, in addition to other remedies available by the Federal Government.

DEBARMENT CERTIFICATION

The prequalified bidder certifies to the best of his knowledge and belief, that he and his principals:

a. Are not presently debarred, suspended, proposed for debarment, declared ineligible, or voluntarily excluded from covered transactions by any Federal department or agency;

b. Have not within a three-year period preceding this proposal been convicted of or had a civil judgment rendered against them for commission of fraud or a criminal offense in connection with obtaining, attempting to obtain, or performing a public (Federal, State or local) transaction or contract under a public transaction; violation of Federal or State antitrust statutes or commission of embezzlement, theft, forgery, bribery, falsification or destruction of records; making false statements; or receiving stolen property;

c. Are not presently indicted for or otherwise criminally or civilly charged by a governmental entity (Federal, State or local) with commission of any of the offenses enumerated in paragraph b. of this certification; and

d. Have not within a three-year period preceding this proposal had one or more public transactions (Federal, State or local) terminated for cause or default.

e. Will submit a revised Debarment Certification immediately if his status changes and will show in his bid proposal an explanation for the change in status.

If the prequalified bidder cannot certify that he is not debarred, he shall provide an explanation with this submittal. An explanation will not necessarily result in denial of participation in a contract.

Failure to submit a non-collusion affidavit and debarment certification will result in the prequalified bidder's bid being considered non-responsive.

☐ Check here if an explanation is attached to this certification.

Contract No.: **C202697 (U-3321C&DA)**

Counties: **Gaston and Mecklenburg Counties**

ACCEPTED BY THE
DEPARTMENT OF TRANSPORTATION, NORTH CAROLINA TURNPIKE AUTHORITY

_____
NCTA Chief Engineer

_____
Date

Execution of Contract and Bonds
Approved as to Form:

_____
Attorney General