WESTERN WAKE FREEWAY (TIP R-2635A, B, C)

FINAL REQUEST FOR PROPOSALS:

VOLUME II

April, 16 2008

VOID FOR BIDDING

DATE AND TIME OF TECHNICAL AND PRICE PROPOSAL SUBMISSION: **July 17, 2008 at 4:00 PM**

DATE AND TIME OF PRICE PROPOSAL OPENING: **July 29, 2008 at 10:00 AM**

CONTRACT ID:	C201993
WBS ELEMENT NO.	35520.1.TA1
COUNTY:	Wake
ROUTE:	Western Wake Freeway – A Portion of the Triangle Expressway
MILES:	12.6
LOCATION:	From NC 55 at SR1172 in Apex to NC 55 near SR 1630 in Wake County
TYPE OF WORK:	DESIGN-BUILD SERVICE AS SPECIFIED IN THE SCOPE OF WORK CONTAINED IN THE REQUEST FOR PROPOSAL

NOTICE:

ALL PROPOSERS SHALL COMPLY WITH ALL APPLICABLE LAWS REGULATING THE PRACTICE OF GENERAL CONTRACTING AS CONTAINED IN CHAPTER 87 OF THE GENERAL STATUTES OF NORTH CAROLINA WHICH REQUIRES THE PROPOSER TO BE LICENSED BY THE N.C. LICENSING BOARD FOR CONTRACTORS WHEN BIDDING ON ANY NON-FEDERAL AID PROJECT WHERE THE BID IS $30,000 OR MORE, EXCEPT FOR CERTAIN SPECIALTY WORK AS DETERMINED BY THE LICENSING BOARD. PROPOSERS SHALL ALSO COMPLY WITH ALL OTHER APPLICABLE LAWS REGULATING THE PRACTICES OF ELECTRICAL, PLUMBING, HEATING AND AIR CONDITIONING AND REFRIGERATION CONTRACTING AS CONTAINED IN CHAPTER 87 OF THE GENERAL STATUTES OF NORTH CAROLINA. NOT WITHSTANDING THESE LIMITATIONS ON BIDDING, THE PROPOSER WHO IS AWARDED ANY PROJECT SHALL COMPLY WITH CHAPTER 87 OF THE GENERAL STATUTES OF NORTH CAROLINA FOR LICENSING REQUIREMENTS WITHIN 60 CALENDAR DAYS OF BID OPENING, REGARDLESS OF FUNDING SOURCES.

_____

5% BID BOND OR BID DEPOSIT REQUIRED

_____

PROPOSAL FORM FOR THE CONSTRUCTION OF CONTRACT NO. C201993

IN WAKE COUNTY, NORTH CAROLINA

Date_____ 20_____

NORTH CAROLINA TURNPIKE AUTHORITY,

RALEIGH, NORTH CAROLINA

The Design-Build Team herein acknowledges that it has carefully examined the location of the proposed work to be known as Contract No. C201993; has carefully examined the Final Request for Proposal (RFP) and all addendums thereto, specifications, special provisions, the form of contract, and the forms of contract payment bond and contract performance bonds, which are acknowledged to be part of the Contract; and thoroughly understands the stipulations, requirements and provisions. The undersigned Design-Build Team agrees to be bound upon their execution of the Contract and including any subsequent award to them by the North Carolina Turnpike Authority Board of Directors in accordance with this Contract to provide the necessary contract payment bond and contract performance bond within fourteen calendar days after the written notice of award is received by them.

The undersigned Design-Build Team further agrees to provide all necessary materials, machinery, implements, appliances, tools, labor, and other means of construction, except as otherwise noted, to perform all the work and required labor to design, construct and complete all the work necessary for Contract No. C201993 in Wake County by no later than the dates(s) specified in the Final RFP or Technical Proposal, whichever is earlier, and in accordance with the requirements of the Contract Documents including the Technical Proposal prepared by the Design-Build Team. The Design-Build Team further agrees that the work required of these Contract Documents will be performed at the lump sum price bid by the Design-Build Team in their Price Proposal.

The Design-Build Team shall provide signed and sealed documents prepared by the Design-Build Team, which specifications and plans show the details covering this project and adhere to the items noted above.

The Design-Build Team acknowledges that project documents furnished by the NCTA or the NCDOT are preliminary and provided solely to assist the Design-Build Team in the development of the project design. Unless otherwise noted herein, the NCTA or the NCDOT does not warrant or guarantee the sufficiency or accuracy of any information furnished by the NCTA or NCDOT.

The NCTA or the NCDOT does not warrant or guarantee the sufficiency or accuracy of any investigations made, nor the interpretations made or opinions of the NCTA or the NCDOT as to the type of materials and conditions to be encountered at the project site. The Design-Build Team is advised to make such independent investigations, as they deem necessary to satisfy their self as to conditions to be encountered on this project. The Design-Build Team shall have no claim for additional compensation or for an extension of contract time for any reason resulting from the actual conditions encountered at the site differing from those indicated in any of the information or documents furnished by the NCTA or the NCDOT except as may be allowed under the provisions of the Standard Specifications.

Although the NCTA or the NCDOT has furnished preliminary designs for this project, the Design-Build Team shall assume full responsibility, including liability, for the project design, including the use of portions of the NCTA or NCDOT design, modification of such design, or other designs as may be submitted by the Design-Build Team.

The Design-Build Team shall be fully and totally responsible for the accuracy and completeness of all work performed under this contract, and shall indemnify and hold the NCTA and the NCDOT harmless for any additional costs and all claims against the NCTA or the State which may arise due to errors or omissions of the NCTA or the NCDOT in furnishing the preliminary project designs and information, and of the Design-Build Team in performing the work.

The published volume entitled *North Carolina Department of Transportation, Raleigh, Standard Specifications for Roads and Structures, JULY 2006*, as well as all NCTA and NCDOT design manuals, policy and procedures manuals, and AASHTO publications and guidelines referenced in the Request For Proposal, with all amendments and supplements thereto, are by reference, incorporated and made part of this contract; that, except as herein modified, all the design, construction and Construction Engineering Inspection included in this contract is to be done in accordance with the documents noted above and under the direction of the Engineer as and to the extent provided in the Contract Documents.

If the Design-Build Proposal is accepted and the award is made, the Technical Proposal submitted by the Design-Build Team is by reference, incorporated and made part of this contract, subject to any limits noted in the Request for Proposals. The contract is valid only when signed either by the Contract Officer or such other person as may be designated by the NCTA Chief Engineer to sign for the North Carolina Turnpike Authority. The conditions and provisions herein cannot be changed except by written approval as allowed by the Request For Proposal.

Accompanying the Design-Build Proposal shall be a bid bond secured by a corporate surety, or certified check payable to the order of the North Carolina Turnpike Authority, for five percent of the total bid price, which deposit is to be forfeited as liquidated damages in case this bid is accepted and the Design-Build Team shall fail to provide the required payment and performance bonds with the North Carolina Turnpike Authority, under the condition of this proposal, within 14 calendar days after the written notice of award is received by them, as provided in the Standard Specifications; otherwise said deposit will be returned to the Design-Build Team.

TO BE SEALED IN FINAL RFP	TO BE SEALED IN FINAL RFP
NCTA Director of Construction	*NCTA Chief Engineer*

TABLE OF CONTENTS

COVER SHEET
PROPOSAL SHEETS

PROJECT SPECIAL PROVISIONS (GREEN SHEETS) *PAGE NO.*

DEFINITIONS 1
CONTRACT TIME AND LIQUIDATED DAMAGES 1
PROPOSAL VALIDITY PERIOD 2
SUBSTANTIAL COMPLETION BONUS 3
OTHER LIQUIDATED DAMAGES AND INCENTIVES 4
COST-LOADED CRITICAL PATH METHOD PROJECT SCHEDULE 5
MOBILIZATION 5
FUEL PRICE ADJUSTMENT 6
PARTNERING 6
SCHEDULE OF ESTIMATED COMPLETION PROGRESS 6
SUBSTANTIAL COMPLETION 7
VALUE ANALYSIS 8
DISADVANTAGED BUSINESS ENTERPRISE 8
CERTIFICATION FOR FEDERAL-AID PROJECTS 12
CONTRACTOR'S LICENSE REQUIREMENTS 13
U. S. DEPARTMENT OF TRANSPORTATION HOTLINE 13
SUBSURFACE INFORMATION 13
COOPERATION BETWEEN CONTRACTORS 14
DISPUTE REVIEW BOARD (DRB) 15
TRAINING REQUIREMENTS 25
PRICE PROPOSAL DOCUMENTATION 25
THREE-YEAR GUARANTEE 27
OUTSOURCING OUTSIDE U.S.A 44
PROCEDURE FOR MONITORING BORROW PIT DISCHARGE 45
EROSION AND SEDIMENT CONTROL / STORMWATER CERTIFICATION 46
PERMIT MODIFICATIONS 52
CLEARING AND GRUBBING 53
SHPO DOCUMENTATION FOR BORROW/WASTE SITES 54
BURNING RESTRICTIONS 55
BUILDING AND APPURTENANCE REMOVAL / DEMOLITION 55
CEMENT AND LIME STABILIZATION OF SUB-GRADE SOILS 55
PRICE ADJUSTMENTS FOR ASPHALT BINDER 60
PRICE ADJUSTMENTS ASPHALT CONCRETE PLANT MIX 60
ROCK BLASTING 61
USE OF ELECTRONIC DESIGN FILES 71
DESIGN REFERENCES 73
REVIEW OF DESIGN SUBMITTALS 73
DESIGN, CONSTRUCTION AND CEI WORK PERFORMANCE BY DESIGN-BUILD TEAM 74
ETHICS POLICY 74
APPROVAL OF PERSONNEL 75

SCOPES OF WORK (GREEN SHEETS)

ROADWAY DESIGN 76
STRUCTURE 85
PAVEMENT MANAGEMENT 90
HYDRAULICS 94
GEOTECHNICAL ENGINEERING 96
TRAFFIC CONTROL AND PAVEMENT MARKINGS 107
SIGNING 120
TRAFFIC SIGNALS 126
ENVIRONMENTAL PERMITS 131
RAILROAD COORDINATION 136
EROSION AND SEDIMENTATION CONTROL 139
OPEN ROAD TOLLING (ORT) INFRASTRUCTURE 145
COMMUNICATION / ITS NETWORK CONDUIT SYSTEM 164
LIGHTING 171
GREENWAYS 209
UTILITIES COORDINATION 212
RIGHT OF WAY 217
CONSTRUCTION ENGINEERING & INSPECTION 220
UTILITY CONSTRUCTION 227
AESTHETIC DESIGN 244
PUBLIC INFORMATION 248

PERMITS (WHITE SHEETS)

..... 251

STANDARD SPECIAL PROVISIONS (YELLOW SHEETS)

PLANT AND PEST QUARANTINES 252
REINFORCED BRIDGE APPROACH FILL 252
AGGREGATE BASE COURSE 255
PREPARATION OF SUBGRADE AND BASE 255
ASPHALT PAVEMENTS- SUPERPAVE 255
ASPHALT BINDER CONTENT OF ASPHALT PLANT MIXES 264
FINAL SURFACE TESTING – ASPHALT PAVEMENTS 265
TYING PROPOSED CONCRETE PAVEMENT TO EXISTING CONCRETE PAVEMENT 268
TYING PROPOSED CONCRETE PAVEMENT TO PROPOSED ASPHALT PAVEMENT 269
TYPING PROPOSED ASPHALT PAVEMENT TO EXISTING CONCRETE PAVEMENT 269
BEGINNING AND ENDING OF CONCRETE PAVEMENT 269
CONCRETE PAVEMENT AND SHOULDERS 269
FENCE 276
STREET SIGNS AND MARKERS AND ROUTE MARKERS 276
CABLE GUIDERAIL 277
STEEL U-CHANNEL POSTS 277
SHIPPING SIGNS 277
AGGREGATE PRODUCTION 278
CONCRETE BRICK AND BLOCK PRODUCTION 278
PAINT SAMPLING AND TESTING 278
GLASS BEADS 278

CHANGEABLE MESSAGE SIGNS 279
ENGINEERING FABRICS 279
PORTABLE CONCRETE BARRIER 279
PORTLAND CEMENT CONCRETE (ALKALI-SILICA REACTION) 279
TEMPORARY SHORING 280
PAVEMENT MARKING LINES 288
INTERNATIONAL ROUGHNESS INDICATOR (IRI) 288
ROLLER COMPACTED CONCRETE 290
OVERHEAD SIGN SUPPORTS 300
OVERHEAD SIGN FOUNDATIONS 306
AVAILABILITY OF FUNDS – TERMINATION OF CONTRACTS 315
NCDOT GENERAL SEED SPECIFICATION FOR SEED QUALITY 316
ERRATA 319
AWARD OF CONTRACT 323
MINORITY AND FEMALE EMPLOYMENT REQUIREMENTS 324
REQUIRED CONTRACT PROVISIONS FEDERAL-AID CONSTRUCTION CONTRACTS 327
TRAINING SPECIAL PROVISIONS 337
WAGE RATES 340
DIVISION ONE 343

PROPOSAL FORM ITEM SHEET, ETC.

ITEMIZED PROPOSAL SHEET (WHITE SHEET)
FUEL USAGE CHART AND ESTIMATE OF QUANTITIES (WHITE SHEET)
LISTING OF DBE SUBCONTRACTORS (YELLOW SHEETS)
EXECUTION OF BID, NONCOLLUSION AFFIDAVIT & DEBARMENT CERTIFICATION SIGNATURE SHEET (YELLOW SHEETS)

PROJECT SPECIAL PROVISIONS

DEFINITIONS

Definitions that apply to the entire RFP are contained in Article 101-3 of the Standard Special Provision entitled "Division One". Definitions that apply to a specific provision, or reference thereto, are contained in the Project Special Provisions for (1) "Disadvantaged Business Enterprise" by reference to the Instructions to Proposers (Volume I); (2) "Dispute Review Board;" (3) "Three-Year Guarantee;" and (4) "Rock Blasting," as well as Article 108-2 of the Standard Special Provision entitled "Division One."

CONTRACT TIME AND LIQUIDATED DAMAGES

(3-17-08) SP1 G07

The Authority will issue a written Notice to Proceed for preconstruction activities or an Unlimited Notice to Proceed to the Design-Build Team immediately upon execution of the of the Contract by the NCTA in accordance with the Project Special Provision, "Proposal Validity Period". The Design-Build Team shall begin performance of the Work as directed in the Notice to Proceed, and shall thereafter perform the Work in accordance with the cost-loaded Critical Path Method Project Schedule (CPM), so as to achieve timely completion of the Project by the applicable completion dates specified herein. Any design or construction activities started or performed before receipt of the written Notice to Proceed, including without limitation design efforts beyond those required for the generation of the Technical Proposal, the order or purchase of materials and/or equipment, mobilization of equipment, or other associated activities, shall be at the risk and expense of the Design-Build Team. The first day of Contract performance will be specified in the Notice to Proceed.

Regardless of the issuance of a Notice to Proceed, no physical work in jurisdictional waters and/or wetlands shall begin until a meeting between the NCTA, applicable Regulatory Agencies, and the Design-Build Team is held and appropriate permits are obtained in accordance with the Contract Documents.

When observation periods are required by the Contract Documents, the observation periods are not a part of the Work to be completed by the completion dates and/or intermediate contract times. Should an observation period extend beyond the Final Completion Date either (1), the performance and payment bonds shall remain in full force and effect until the observations have been completed and the Work has been accepted or (2) the Warranty Bond required in the Project Special Provision, "Three-Year Guarantee" shall clearly cover the observation periods.

The Substantial Completion Date for the Project is defined as the Substantial Completion Date proposed in the Technical Proposal by the Proposer who is awarded the contract. The Substantial Completion date thus proposed shall be no later than December 31, 2011. Subject to any time extensions approved in writing by the Authority, the Proposer shall be liable for liquidated damages in the amount of Twenty Five Thousand Dollars ($25,000.00) per calendar day for each day of delay in achieving Substantial Completion.

The Final Completion Date for the Project is defined as the Final Completion Date proposed in the Technical Proposal by the Proposer who is awarded the contract. The Final Completion date thus proposed shall be no later than July 1, 2012. Subject to any time extensions approved in writing by the Authority, the Proposer will be liable for liquidated damages in the amount of Ten Thousand Dollars ($10,000.00) per calendar day for each day of delay in achieving Final Completion.

By execution and submission of a Price Proposal, the Design-Build Team agrees and acknowledges that such liquidated damages are reasonable in order to compensate the Authority for damages it will incur as a result of delays in achieving Substantial Completion and Final Completion. Such damages include, without limitation, (1) loss of revenue for the Authority due to late service commencement, (2) loss of use, enjoyment and benefit of the Project and connecting transportation facilities by the general public, (3) additional oversight and administrative costs, (4) debt service costs, and (5) injury to the credibility and reputation of the Authority's transportation improvement program with policy makers and with the general public who depend on and expect availability of service by the planned Completion Dates, which injury to credibility and reputation may directly result in loss of ridership on the Project and connecting transportation facilities, and further loss of revenue and/or toll revenues. The Design-Build Team further agrees and acknowledges that these liquidated damages are incapable of accurate measurement at the time of Contract execution because of, among other things, the unique nature of the Project and the unavailability of a substitute.

PROPOSAL VALIDITY PERIOD

The Authority anticipates that "gap" funding may become available on, or around, July 1, 2008, prior to bond proceeds and other financial commitments. In such case, the Authority intends to issue a Notice of Award to the Design-Build Team with the lowest Adjusted Price at the time that gap funding becomes available. Immediately upon execution of the Contract, the Authority will issue a written Notice to Proceed to the Design-Build Team for preconstruction activities only. During this limited Notice to Proceed, the Design-Build Team may pursue any design and submittal activities for the NCTA's review and acceptance. Compensation for such preconstruction activities will be provided in accordance with Article 108-2 of the Standard Special Provision entitled "Division One" contained elsewhere in this RFP.

The Financial Closing Date for full funding is anticipated to be on, or before, September 1, 2008. The Authority will issue a Unlimited Notice to Proceed immediately following the Financial Closing Date. In the event that the Financial Closing Date is delayed beyond September 1, 2008, the Design-Build Team agrees, as evidenced by submission of the Technical Proposal and Price Proposal, to remain bound to all terms, conditions, requirements, and technical components of the RFP, the Technical Proposal, and Price Proposal until 120 days after the latest submission of the Technical Proposal and Price Proposal.

If necessary, this 120 day period may be extended if mutually agreeable by the NCTA and the Design-Build Team. Otherwise, the Design-Build Team may withdraw their Price Proposal in accordance with Article 103-4(A) of the Standard Special Provision entitled "Division One" (as amended by the details herein) contained elsewhere in this RFP.

If a delay in the Unlimited Notice to Proceed occurs solely due to the NCTA's failure to provide full funding on or before September 1, 2008, contract time extension(s) will be administered in accordance with the Standard Special Provision entitled "Division One" contained elsewhere in the RFP and will apply to the Substantial Completion Date, Intermediate Contract Date Number 1, and the Final Completion Date. Contract time extensions applicable as a result of the NCTA's inability to execute the contract due to funding will be applicable to the Bonus for early completion.

SUBSTANTIAL COMPLETION BONUS **(3-15-08)**

Coordination and cooperation among the Design-Build Team on this project, the Design-Build Team on the adjacent Triangle Parkway Project, the ITS Contractor, and the Toll Integrator is critical. Please refer to Project Special Provision titled "Cooperation Between Contractors".

The NCTA desires that each of these entities work with such labor, equipment and materials as necessary to ensure that the Substantial Completion Date will be met without regard to the time extensions and time reliefs provided for in this contract or any associated Specifications. Therefore, as full compensation for all extra cost involved and subject to the conditions outlined herein, the NCTA agrees to pay as a bonus, the applicable amount noted below:

1. In the event that Substantial Completion, as defined by the Project Special Provision entitled "Substantial Completion," is achieved by the Substantial Completion Date proposed in the Technical Proposal, and toll collection and enforcement technology is fully implemented with appropriate accuracy levels achieved and uninterrupted revenue collection could begin immediately upon opening to traffic, the aggregate sum of $3,000,000.00 will be paid to the Design-Build Team for this project, the ITS Contractor and the Toll Integrator. The Design-Build Team for this project will receive 85% of this amount and the remainder will be shared with the ITS Contractor and the Toll Integrator in accordance with their respective contract provisions.

   In the event that Substantial Completion of this project, as defined by the Project Special Provision entitled "Substantial Completion," is achieved by the Substantial Completion Date proposed in the Technical Proposal and the Design-Build Team has met all contractual obligations to facilitate in a timely manner the work of the ITS and Toll Integration contractors, then the Design-Build Team will be paid a bonus of $2,000,000.00.

2. In the event the Design-Build Team fails to achieve Substantial Completion in accordance with either case noted above, then no bonus of any kind will be paid under this provision.

If the Unlimited Notice to Proceed is delayed due to a delayed Financial Closing Date as noted in the Project Special Provision, "Proposal Validity Period ," the Substantial Completion Date for the purposes of the bonus noted herein will be adjusted in accordance with the Standard Special Provision entitled "Division One" contained elsewhere in this RFP**. An adjustment to the Substantial Completion Date will not apply for the purpose of the bonus unless the adjustment is granted solely due to a delay in the Financial Closing Date.**

OTHER LIQUIDATED DAMAGES AND INCENTIVES

(3-17-08) DB1 G11

Refer to the Traffic Control Scope of Work for more information on the following time restrictions and liquidated damages:

Liquidated Damages for **Intermediate Contract Time #1** for lane narrowing, lane closure, holiday and special event time restrictions for current I-540, NC 540, Western Wake Freeway, NC 55 in Durham County and US 64 are $5,000.00 per 30 minutes or any portion thereof..

Liquidated Damages for **Intermediate Contract Time #2** for lane narrowing, lane closure, holiday and special event time restrictions for Carpenter Fire Station Rd. (SR 1624), US 1, NC 55 Bypass in Wake County, Green Level Church Rd. (SR 1600) and Olive Chapel Rd. (SR 1160), are $1,000.00 per hour or any portion thereof.

Liquidated Damages for **Intermediate Contract Time #3** for road closure time restrictions for I-540, NC540, Western Wake Freeway and US 64 are $2,500.00 per 15 minute period or any portion thereof.

Liquidated Damages for **Intermediate Contract Time #4** for road closure time restrictions for McCrimmon Parkway, Carpenter Fire Station Rd. (SR 1624), Green Level Church Rd. (SR 1600), Olive Chapel Rd. (SR 1160), US 1, and NC 55 Bypass are $500.00 per 15 minute period or any portion thereof.

Liquidated Damages for **Intermediate Contract Time #5** for road closure time restrictions for Green Hope School Rd. (SR 1621), Green Level West Rd. (SR 1615), Kelly Rd. (SR 1163), Apex Barbecue Rd. (SR 1162), Old Holly Springs-Apex Rd. (SR 1153) are $200.00 per 15 minute period or any portion thereof.

Liquidated Damages for **Intermediate Contract Time #6** for road closure time restrictions for Roberts Rd. (SR 1608), Jenks Rd. (SR 1601) and Old US 1 (SR 1101) are $500.00 per calendar day.

Erosion and Sedimentation Control Incentives and Liquidated Damages:

The Design-Build Team will be eligible for an incentive in the amount of $150,000.00 if construction operations have been performed in accordance with all environmental regulations and the Specifications, and the Design-Build Team does not receive any Immediate Corrective Actions (ICA), Continuances of Immediate Correction Action (CICA), Notices of Violation (NOV), and/or Cease and Desist (C&D) orders at any time during the project.

The Design-Build Team's first NOV or C&D violation shall result in a forfeiture of the entire incentive noted above. The Design-Build Team will forfeit $50,000.00 from the $150,000.00 incentive noted above for each ICA and/or CICA violation. After the entire $150,000.00 incentive is forfeited, Liquidated Damages in the amount of $12,500.00 per any type of violation shall be deducted from the lump sum bid amount due the Design-Build Team.

Reference Erosion and Sedimentation Control Scope of Work for additional information.

Open Road Tolling Infrastructure and Conduit:

Liquidated damages apply to the completion dates of the open-road tolling infrastructure and conduit network to ensure that adequate time is reserved for the Toll Integration contractor and ITS contractor to complete their work by the Substantial Completion Date.

Liquidated damages for Intermediate Contract Date #1 for completion of the open-road tolling infrastructure and conduit network for the entire project are Fifteen Thousand Dollars ($15,000.00) per calendar day. The portion of work required for this Intermediate Contract Date is all work necessary to design, fabricate, install, and erect on the entire project the toll gantries, conduit, and other items as depicted in the ORT Infrastructure Scope of Work and Communication/ITS Network Conduit System Scope of Work and any other scopes of work sufficient to allow installation and testing of toll technology by the ITS contractor and Toll Integrator. The Completion Date for this Intermediate Contract Date #1 is 120 days prior to the Substantial Completion Date.

COST-LOADED CRITICAL PATH METHOD PROJECT SCHEDULE

A cost-loaded Critical Path Method Project Schedule (CPM) is required for this project. Reference Article 108-2 of the Standard Special Provision entitled "Division One" found elsewhere in this RFP.

MOBILIZATION

(10-31-05) (Rev 3-13-08) DB1 G15

Revise the *2006 Standard Specifications* as follows:

Page 8-1, Subarticle 800-2, MEASUREMENT AND PAYMENT

Delete this subarticle in its entirety and replace with the following:

800-2 MEASUREMENT AND PAYMENT

Five (5) percent of the "Total Amount of Bid for Entire Project" shall be considered the lump sum amount for Mobilization. Partial payments for Mobilization will be made beginning with the first partial pay estimate paid following the issuance of Notice to Proceed. Payment will be made at the rate of 25 percent of the lump sum amount calculated for Mobilization. The remaining portion of the Mobilization will be paid as follows: Payment will be made at the rate of 25 percent of the lump sum amount calculated for Mobilization immediately following the Unlimited Notice to Proceed. The remaining 50 percent will be paid with the second partial pay estimate following the issuance of the Unlimited Notice to Proceed.

FUEL PRICE ADJUSTMENTS
(1-10-08)

The Design-Build Team shall prepare and submit an Estimate of Quantities in accordance with the Instructions to Proposers, Section 3.C.

The Design-Build Team's Estimate of Quantities will be used on the various partial payment estimates to determine fuel price adjustments. The Design-Build Team shall submit a payment request for quantities of work completed based on the work completed for that estimate period. The quantities requested for partial payment shall be reflective of the work actually accomplished for the specified period. The Design-Build Team shall certify that the quantities are reasonable for the specified period. The base index price for DIESEL #2 FUEL is 3.2404 per gallon.

PARTNERING
3-17-08 DB1 G49

As detailed in the Triangle Expressway Project Management Plan, the North Carolina Turnpike Authority intends to encourage the formation of a cohesive relationship with the Design-Build Team and its principal subcontractors and suppliers. This relationship will be structured to draw on the strengths of each organization to identify and achieve reciprocal goals. The objectives are safe, effective, and efficient contract performance; and completion within budget, on schedule, and in accordance with the plans and specifications.

This relationship will be bilateral in makeup. The Design-Build Team shall hire a professional facilitator to conduct partnering meetings every 4 months thereafter for the life of the project. All cost associated with this item shall be included in the Design-Build Team's lump sum bid.

To implement this initiative prior to starting work in accordance with the requirements of Section 108 of the Standard Special Provisions, Division 1 (found elsewhere in this RFP), and prior to the preconstruction conference, the Design-Build Team's management personnel and NCTA Chief Engineer will initiate a partnering development seminar/team building workshop. Project personnel will make arrangements to determine attendees at the workshop, agenda of the workshop, duration, and location. Persons required to be in attendance will be representatives from the NCTA and the NCDOT Alternative Delivery Unit, and key project personnel; the Design-Build Team's senior management personnel, the Design-Build Team's on-site project manager, and key project supervisory personnel for both the Design-Build Team and principal subcontractors and suppliers. The project design engineers, FHWA, and key local government personnel will also be invited to attend as necessary.

The establishment of the partnering charter on a project will not change the legal relationship to the Contract nor relieve either party from any of the terms of the Contract.

SCHEDULE OF ESTIMATED COMPLETION PROGRESS
3-13-08) DB1 G58

The Design-Build Team's attention is directed to the Standard Special Provision entitled "Availability of Funds - Termination of Contracts" included elsewhere in this RFP. The North

Carolina Turnpike Authority's schedule of estimated completion progress for this project as required by that Standard Special Provision is as follows:

Fiscal Year	Progress (Dollar Value)
2009 (07/01/08 – 06/30/09)	30 % of Total Amount Bid
2010 (07/01/09 – 06/30/10)	30 % of Total Amount Bid
2011 (07/01/10 – 06/30/11)	25 % of Total Amount Bid
2012 (07/01/11 – 06/30/12)	15 % of Total Amount Bid

The Authority will invest gap funds, TIFIA loan funds and/or bond proceeds in a variety of investment instruments directly upon receipt. In order to ensure funds are readily available, to facilitate the Design-Build Team's construction schedule and respective payments, and allow for reasonable investment of these funds, if the Design-Build Team anticipates that their schedule will require payments to be accelerated from that indicated above, the Design-Build Team shall submit with their Price Proposal a similar chart to that above. This chart shall indicate the Design-Build Team's anticipated payout schedule, in terms of percentages of the entire lump sum price bid for the project, on a fiscal year basis. The NCTA does not intend to limit progress based on the above schedule of estimated progress unless required to do so by the North Carolina General Assembly or the trustee of the project funds.

The Design-Build Team shall also furnish his own cost-loaded CPM in accordance with Article 108-2 of the Standard Special Provision entitled "Division One" contained elsewhere in the RFP. Any acceleration of the progress as shown by the Design-Build Team's progress schedule over the progress as shown above shall be subject to the approval of NCTA.

SUBSTANTIAL COMPLETION (3-18-08)

The Project will have reached Substantial Completion when all of the following requirements are satisfied:

1. Through traffic has been placed along the Project or along the work so that all lanes and shoulders are open such that traffic can move unimpeded at the posted speed and intersecting roads and service roads are completed to the extent that they provide the safe and convenient use of the facility by the public;
2. The final layers of pavement for all lanes and shoulders along the mainline alignment of the project (-L-) are complete;
3. All signs for the purposes of safe travel, enforcement of any applicable laws, and guidance of the public are complete and accepted, including any required for toll collection purposes;
4. All guardrails, drainage devices, ditches, and embankments are completed;
5. Remaining Project Work on the mainline alignment of the project (-L-) consists of permanent pavement markings, permanent pavement markers or incidental construction that is away from the paved portion of the roadway; and

6. A satisfactory warranty bond is executed and provided to the NCTA. Reference the Project Special Provision "Three-Year Guarantee."

Upon apparent substantial completion of the Project, the Design-Build Team will perform an in-depth self-inspection to ensure that the Project meets the conditions of Substantial Completion as defined herein. Upon recommendation from the Design-Build Team, the Engineer will perform a subsequent inspection. The results of the Engineer's inspection will be shared with the Design-Build Team in writing, and the Design-Build Team will be advised as to whether or not the Engineer has determined Substantial Completion to have been met. Substantial Completion will not have occurred until all of the recommendations made, if any, at the time of the Engineer's inspection have been satisfactorily met.

Once toll collection begins, the NCTA will loan transponders to the Design-Build Team to allow completion of the project free of tolls.

VALUE ANALYSIS

(1-5-07) DB2 R12

Value Engineering Construction Proposals (VECP), as identified in Article 104-12 of the Standard Special Provision, Division One contained elsewhere in this RFP will be accepted. Only proposals, which alter the requirements of the Contract Documents issued by NCTA, will be considered as Value Engineering Construction Proposals.

DISADVANTAGED BUSINESS ENTERPRISE

(10-16-07) (Rev. 3-13-08) DB1 G6

The Design-Build Team's attention is directed to Section 11 of the Instructions to Proposers (Volume I) which contains pertinent definitions and DBE requirements to be met during the procurement period and prior to contract award and which, by reference, are fully incorporated into these Contract Documents.

Policy

It is the policy of the Authority that Disadvantaged Business Enterprises (DBEs) as defined in *49 CFR Part 26* shall have the equal opportunity to compete fairly for and to participate in the performance of contracts financed in whole or in part by federal funds.

The NCTA is utilizing the NCDOT federally approved DBE Program. Therefore, NCDOT will play a role in the oversight of the DBE Program related activities on this project.

Obligation

The Design-Build Team, Subcontractors, and sub-recipient shall not discriminate on the basis of race, religion, color, national origin, age, disability, or sex in the performance of this Contract. The Design-Build Team shall comply with applicable requirements of *49 CFR Part 26* in the award and administration of federally assisted contracts. Failure by the Design-Build Team to

comply with these requirements is a material breach of the Contract, which may result in the termination of this Contract or such other remedy, as the Authority deems necessary.

Goals

The following goal for participation by DBEs is established for this Contract:

Disadvantaged Business Enterprises **14%**

The Design-Build Team shall exercise all necessary and reasonable steps to ensure that DBEs participate in at least the percent of the Contract as set forth above as the goal.

This goal is to be met through utilization of highway construction contractors. Utilization of DBE firms performing design, other preconstruction services, or Construction Engineering and Inspection, are not included in this goal. DBE utilization for engineering related services is expected.

Contract Requirement

The approved DBE participation, as outlined in the Instructions to Proposers and herein, submitted by the Design-Build Team shall be the requirement of the Contract ("Contract Requirement").

DBE Replacement

The Design-Build Team shall not terminate a committed DBE subcontractor for convenience or perform the work with its own forces or those of an affiliate. If the Design-Build Team fails to demonstrate reasonable efforts to replace a committed DBE firm that does not perform as intended with another committed DBE firm or completes the work with its own forces without the Engineer's approval, the Design-Build Team and any of its affiliated companies may be disqualified from further bidding on future NCTA contracts.

The Design-Build Team shall comply with the following for replacement of committed DBEs.

(A) Performance Related Replacement

When a DBE is terminated or fails to complete its work on the contract for any reason, the Design-Build Team shall take all necessary, reasonable steps to replace the DBE subcontractor with another DBE subcontractor to perform at least the same amount of work as the DBE that was terminated. The Design-Build Team is encouraged to first attempt to find another DBE firm to do the same work as the DBE that was being terminated.

To demonstrate necessary, reasonable good faith efforts, the Design-Build Team shall document the steps they have taken to replace any DBE subcontractor who is unable to perform successfully with another DBE subcontractor. Such documentation shall include but not be limited to the following:

(1) Copies of written notification to DBEs that their interest is solicited in subcontracting the work defaulted by the previous DBE subcontractor or in subcontracting other items of work in the contract.

(2) Efforts to negotiate with DBEs for specific subbids including, at a minimum:

(a) The names, addresses, and telephone numbers of DBEs who were contacted.

(b) A description of the information provided to DBEs regarding the plans and specifications for portions of the work to be performed.

(3) For each DBE contacted but rejected as unqualified, the reasons for the Design-Build Team's conclusion.

(4) Efforts made to assist the DBEs contacted, if needed, in obtaining bonding or insurance required by the Design-Build Team.

(B) Decertification Replacement

When a committed DBE is decertified by the Department after a Request for Subcontract has been received by the NCTA, the NCTA will not require the Design-Build Team to solicit replacement DBE participation equal to the remaining work to be performed by the decertified firm. The participation equal to the remaining work performed by the decertified firm will count toward the contract requirement.

When a committed DBE is decertified prior to NCTA receiving a Request for Subcontract for the named DBE firm, the Design-Build Team shall take all necessary and reasonable steps to replace the DBE subcontractor with another DBE subcontractor to perform at least the same amount of work to meet the Contract goal or demonstrate that it has made a good faith effort to do so.

Changes in the Work

When the Engineer makes changes that result in the reduction or elimination of work to be performed by a committed DBE, the Design-Build Team will not be required to seek additional participation. When the Engineer makes changes that result in additional work to be performed by a DBE based upon the Design-Build Team's commitment, the DBE shall participate in additional work to the same extent as the DBE participated in the original contract work.

When the Engineer makes changes that result in extra work, which has more than a minimal impact on the contract amount, the Design-Build Team shall seek additional participation by DBEs unless otherwise approved by the Engineer.

When the Engineer makes changes that result in an alteration of plans or details of construction and a portion or all of work had been expected to be performed by a committed DBE, the Design-Build Team shall seek participation by DBEs unless otherwise approved by the Engineer.

When the Design-Build Team requests changes in the work that result in the reduction or elimination of work that the Design-Build Team committed to be performed by a DBE, the Design-Build Team shall seek additional participation by DBEs equal to the reduced DBE participation caused by the changes.

Reports

All requests for subcontracts involving DBE subcontractors shall be accompanied by a certification executed by both the Design-Build Team and the DBE subcontractor attesting to the agreed upon unit prices and extensions for the affected contract items. This information shall be submitted on the Department Form RS-1-D, located at:

http://www.ncdot.org/doh/forms/files/FORMRS-1-D.doc

unless otherwise approved by the Engineer. The NCTA reserves the right to require copies of actual subcontract agreements involving DBE subcontractors.

Within 30 calendar days of entering into an agreement with a DBE for materials, supplies or services, not otherwise documented by a Request for Subcontract as specified above, the Design-Build Team shall furnish the Engineer a copy of the agreement. The documentation should also indicate the percentage (60% or 100%) of expenditures claimed for DBE credit.

All certifications will be considered a part of the project records, and consequently will be subject to penalties under Federal Law associated with falsifications of records related to projects.

Reporting Disadvantaged Business Enterprise Participation

(A) The Design-Build Team shall provide the Engineer with an accounting of payments made to Disadvantaged Business Enterprise firms, including material suppliers, contractors at all levels (prime, subcontractor, or second tier subcontractor). This accounting shall be furnished to the Engineer for any given month by the end of the following month. Failure to submit this information accordingly may result in the following action:

(1) Withholding of money due in the next partial pay estimate; or

(2) Recommendation by the NCTA for removal of any affiliated company of the Design-Build Team from the Department's appropriate prequalified list or the removal of other entities from the approved subcontractors list.

(3) Removal of any affiliated company from consideration on future NCTA projects

(B) The Design-Build Team shall report the accounting of payments through the Department's DBE Payment Tracking System, which is located at:

https://apps.dot.state.nc.us/Vendor/PaymentTracking/.

The Design-Build Team shall also provide the Engineer an affidavit attesting the accuracy of the information submitted in the Payment Tracking System. This too shall be submitted for any given month by the end of the following month.

(C) Design-Build Teams reporting transportation services provided by non-DBE lessees shall evaluate the value of services provided during the month of the reporting period only.

Prior to payment of the final estimate, the Design-Build Team shall furnish an accounting of total payment to each DBE. A responsible fiscal officer of the payee contractor, subcontractor, or second tier subcontractor who can attest to the date and amounts of the payments shall certify that the accounting is correct.

While each contractor (prime, subcontractor, 2nd tier subcontractor) is responsible for accurate accounting of payments to DBEs, it shall be the prime contractor's responsibility to report all monthly and final payment information in the correct reporting manner.

Failure on the part of the Design-Build Team to submit the required information in the time frame specified may result in the disqualification of that Design-Build Team and any of its affiliated companies from further bidding until the required information is submitted.

Failure on the part of any subcontractor to submit the required information in the time frame specified may result in the disqualification of that contractor and any affiliate companies from working on any NCTA and/or DOT project until the required information is submitted.

Failure to Meet Contract Requirements

Failure to meet contract requirements in accordance with Article 102-16(J) of the Standard Special Provision, Division One contained elsewhere in this RFP may be cause to disqualify the Design-Build Team.

CERTIFICATION FOR FEDERAL-AID CONTRACTS

(3-21-90) DB1 G85

The prospective participant certifies, by signing and submitting this Price Proposal, to the best of his or her knowledge and belief, that:

(1) No Federal appropriated funds have been paid or will be paid, by or on behalf of the undersigned, to any person for influencing or attempting to influence an officer or employee of any Federal agency, a Member of Congress, an officer or employee of Congress, or an employee of a Member of Congress in connection with the awarding of any Federal contract, the making of any Federal grant, the making of any Federal loan, the entering into of any cooperative agreement, and the extension, continuation, renewal, amendment, or modification of any Federal contract, grant, loan, or cooperative agreement.

(2) If any funds other than Federal appropriated funds have been paid or will be paid to any person for influencing or attempting to influence an officer or employee of any Federal agency, a Member of Congress, an officer or employee of Congress, or an employee of a

Member of Congress in connection with this Federal contract, grant, loan, or cooperative agreement, the undersigned shall complete and submit Standard Form-LLL, "Disclosure Form to Report Lobbying," in accordance with its instructions.

This certification is a material representation of fact upon which reliance was placed when this transaction was made or entered into. Submission of this certification is a prerequisite for making or entering into this transaction imposed by Section 1352, *Title 31, U.S. Code*. Any person who fails to file the required certification shall be subject to a civil penalty of not less than $10,000 and not more than $100,000 for each such failure.

The Proposer also agrees by submitting his or her Price Proposal that he or she shall require that the language of this certification be included in all lower tier subcontracts, which exceed $100,000 and that all such sub-recipients shall certify and disclose accordingly.

CONTRACTOR'S LICENSE REQUIREMENTS (7-1-95)

If the Design-Build Team does not hold the proper license to perform any plumbing, heating, air conditioning, or electrical work in this contract, he will be required to sublet such work to a contractor properly licensed in accordance with Article 2 of Chapter 87 of the *General Statutes* (licensing of heating, plumbing, and air conditioning contractors) and Article 4 of Chapter 87 of the *General Statutes* (licensing of electrical contractors).

U.S. DEPARTMENT OF TRANSPORTATION HOTLINE

(11-22-94) DB1 G100

To report bid rigging activities call: **1-800-424-9071**

The U.S. Department of Transportation (DOT) operates the above toll-free "hotline" Monday through Friday, 8:00 a.m. to 5:00 p.m. eastern time. Anyone with knowledge of possible bid rigging, bidder collusion, or other fraudulent activities should use the "hotline" to report such activities.

The "hotline" is part of the DOT's continuing effort to identify and investigate highway construction contract fraud and abuse and is operated under the direction of the DOT Inspector General. All information will be treated confidentially and caller anonymity will be respected.

SUBSURFACE INFORMATION

(9-27-05) DB1 G119

Available subsurface information will be provided on this project. The Design-Build Team shall be responsible for additional investigations.

By submitting its Price Proposal, the Proposer acknowledges that the subsurface information furnished by NCDOT or NCTA is preliminary and provided solely to assist the Proposer in the development of the project design. No information with respect to subsurface conditions furnished by the NCTA or NCDOT shall be considered a Contract Document or part of the Contract. If the Proposer or Design-Build Team relies upon any subsurface information furnished by NCTA or NCDOT, they do so at their own risk.

COOPERATION BETWEEN CONTRACTORS

(07/1/95) (Rev 01-11-08) DB1 G133

The Design-Build Team's attention is directed to Article 105-7 of the Standard Special Provision, Division One contained elsewhere in this RFP.

TIP Project U-4763B is a portion of the Triangle Expressway referred to as Triangle Parkway. This highway project will contain new location work from NC 540 to I-40. The U-4763B project will be constructed concurrently with this Contract.

TIP Projects U-4026 and R-2904, NC 54 from SR 1999 in Durham County to SR 1959 in Durham County and SR 1999 from SR 3014 in Wake County to NC 54 in Durham County, will also be constructed concurrently with this Contract.

The Design-Build Team on this project shall cooperate with the Design-Build Team working within or adjacent to the limits of this project to the extent that the work can be carried out to the best advantage of all concerned.

The NCTA will advertise and select contractors for Intelligent Transportation Systems (ITS), Toll System Integration, and Landscaping after the award of this contract. These contracts will encompass the entire Triangle Expressway Corridor and construction will be preformed concurrent with this Design-Build contract. The Design-Build Team shall coordinate with the ITS contractor and Toll System Integrator in the planning, scheduling, design and construction of the elements that are collective to both entities. The Design-Build Team shall integrate the ITS and toll system integration schedules into the CPM schedule and make work areas available, as needed, to successfully meet the contract substantial completion date, intermediate contract completion dates and contract completion dates. Close coordination with the ITS contractor and Toll System Integrator is essential.

The Design-Build Team for this project shall be required to meet and coordinate with the ITS, Toll Integration, Landscaping, and any other Contractors necessary to successfully plan, design, and construct the Triangle Expressway Corridor.

Meetings shall be scheduled and attended by authorized representatives of this Design-Build Team and include personnel from the ITS Contractor, Toll Integration Contractor, Landscaping Contractor, any other pertinent Contractors, and representatives from the NCTA and NCDOT. At a minimum, there shall be a pre-construction meeting, meetings during the construction process, and a post-construction meeting. One final meeting shall be held to reach concurrence that all the construction and toll facility components have been installed properly and function to provide the ability to collect revenue from this freeway.

The Design-Build Team shall also meet, coordinate, and determine with the U-4763B Design-Build Team all work necessary to design, install, and construct all the required features for aesthetics along the Triangle Expressway. Reference the Aesthetic Design Scope of Work.

Reference the ORT Infrastructure Scope of Work and Communication/ITS Network Conduit System Scope of Work for more information regarding the separate contracts.

DISPUTE REVIEW BOARD (DRB)

GENERAL

A. Definitions

Dispute – A contractual issue that involves cost and/or time (either credits or additions) that remains unresolved following good faith negotiations between authorized representatives of the Design-Build Team and the North Carolina Turnpike Authority (NCTA).

Dispute Review Board (DRB) – three neutral individuals mutually selected by the Design-Build Team and the NCTA to review Disputes and render findings and recommendations based on the Contract.

B. Formal DRB Review

This provision provides for a formal DRB review process.

Any of the procedures for the formal DRB Review established by this provision may be altered or modified by mutual written agreement of the Design-Build Team and the NCTA to better suit the needs of a particular Dispute.

C. Summary

A DRB will be established to assist in the analysis of Disputes that arise between the Design-Build Team and the NCTA, to include, but not limited to, Articles 104-4, 104-8(B) or 108-10 of the Standard Special Provision, Division One, contained elsewhere in this RFP.

It is not intended for the NCTA or the Design-Build Team to default on their normal responsibilities to cooperatively and fairly settle their differences by indiscriminately assigning them to the DRB. It is intended that the DRB encourage the NCTA and Design-Build Team to resolve potential disputes without resorting to this alternative resolution procedure.

Utilization of the DRB does not relieve the Design-Build Team or NCTA from complying with all Contract terms and conditions, and does not waive any notice or timeliness requirements of the Standard Specifications for Roads and Structures. However, if a Dispute is referred to the DRB, the claim submittal and review time frames may be superseded by time frames established by the DRB, and agreed to in writing by both the Design-Build Team and the NCTA.

Either the Design-Build Team or the NCTA may refer a Dispute to the DRB. Such referral should be initiated as soon as it appears that the normal NCTA-Design-Build Team dispute resolution effort is not succeeding. However, prior to referring a Dispute to the DRB, the NCTA and Design-Build Team must agree on the central or core issue to bring before the DRB.

Promptly thereafter, the DRB will impartially consider the Dispute(s) referred to it. The DRB will provide **non-binding** written findings and recommendations to the Design-Build Team and the NCTA.

Although the findings and recommendations of the DRB should carry great weight for both the Design-Build Team and the NCTA, they are **not binding** on either the Design-Build Team or the NCTA. However, the findings and recommendations are admissible in subsequent claim resolution proceedings as per the Dispute Review Board, Review of Disputes, Admissibility section contained elsewhere in this provision.

The Dispute Review Board is a condition of this Contract. The NCTA and the Design-Build Team agree that the submission of any unresolved dispute or claim to the DRB is a condition precedent to the Design-Build Team having the right to proceed with its final claim.

D. Scope

This provision describes the purpose, procedure, function, and features of the DRB. A Three-Party Agreement among the NCTA, Design-Build Team, and the selected DRB members will formalize creation of the DRB and establish the scope of its services and the rights and responsibilities of the Design-Build Team and the NCTA. In the event of a conflict between this Specification and the Three-Party Agreement, the latter governs. The form of the Three-Party Agreement will be provided by the NCTA.

E. Purpose

The purpose of the DRB is to provide an independent and impartial review of the Dispute and provide **non-binding** written findings and recommendations, in accordance with the 2006 *NCDOT Standard Specifications for Roads and Structures*, based on the Contract, applicable contract law, industry practices, and the facts presented.

It is not the purpose, or responsibility, of the DRB to resolve the Dispute. That responsibility remains with the Design-Build Team and the NCTA. However, it is anticipated that the DRB review will assist the Design-Build Team and the NCTA in resolving the Dispute.

Creation of the DRB is not intended as a substitute for NCTA or Design-Build Team responsibility to make a good-faith effort to settle the Dispute. Indiscriminate referral of disputes to the DRB without prior attempts by the Design-Build Team and the NCTA to resolve them shall be avoided. The Design-Build Team or NCTA shall exhaust resolution through the escalation process defined in the formal partnering process prior to escalating an issue to the DRB.

F. Continuance of Work

Both the Design-Build Team and the NCTA shall proceed diligently with the work and comply with all applicable Contract provisions while the DRB considers a Dispute.

G. Tenure of DRB

The DRB will be deemed established after the NCTA, the Design-Build Team and the DRB execute the Three-Party Agreement.

The DRB will be dissolved as of the end of the warranty period to the Design-Build Team unless earlier terminated or dissolved by mutual agreement of the Design-Build Team and the NCTA. If mutually agreed upon by the Design-Build Team and the NCTA, the DRB may be dissolved on the date of final payment to the Design-Build Team and a new DRB established as outlined herein to serve for the life of the warranty period.

MEMBERSHIP

A. General

The DRB will consist of three members selected jointly by the Design-Build Team and the NCTA. One member will serve as Chairperson.

B. Criteria

Experience:

1. It is desirable that all DRB members be experienced with the construction process including design, construction, contract administration, contract law, and resolution of construction disputes.

2. It is not necessary that the DRB members be intimately familiar with the specific type of construction involved in the Dispute. The DRB may consult technical experts if the need arises under provisions provided for elsewhere in this Special Provision. See the Dispute Review Board, Review of Disputes, Admissibility section contained elsewhere in this provision.

Neutrality:

1. It is imperative that the DRB members be neutral, act impartially, and be free of any conflict of interest.

2. For purposes of this subparagraph, the term “member” also includes the member’s current primary or full-time employer, and “involved” means having a contractual relationship with either the Design-Build Team or the NCTA, such as a subcontractor, architect, engineer, or construction manager.

3. Prohibitions; disqualifying relationships for prospective members:

(a) An ownership interest in any entity involved in the Project or Contract, or a financial interest in the Contract, except for payment for services on this Dispute Review Board;

(b) Previous employment by, or financial ties to, any party involved in the Contract within a period of eighteen (18) months prior to award of the Contract, except for fee-based consulting services on other projects;

(c) A close professional or personal relationship with any key member of any entity involved in the Contract which, in the judgment of either the Design-Build Team or the NCTA, could suggest partiality; or

(d) Prior involvement in the project of a nature that could compromise the prospective member's ability to participate impartially in the DRB's activities.

4. Prohibitions; disqualifying relationships for members:

(a) Employment, including fee-based consulting services, by any entity involved in the construction contract except with the express approval of both the Design-Build Team and the NCTA;

(b) Discussion concerning, or the making of, an agreement with any entity involved in the Contract regarding employment after the Contract is completed.

5. Any of the provisions of 1 through 4 above may be waived by mutual written agreement of the Design-Build Team and the NCTA.

C. Disclosure Statement

As a part of the selection process, all prospective DRB members will be required to submit complete disclosure statements for the approval of both the Design-Build Team and the NCTA. Each statement shall include a resume of experience, together with a declaration describing all past, present, and anticipated or planned future relationships, including indirect relationships through the prospective member's primary or full-time employer, to this project and with the Design-Build Team or the NCTA, or others involved in the Contract, including subcontractors, suppliers, design professionals, and consultants. Disclosure of close professional or personal relationships with all key members of the Design-Build Team or the NCTA or other parties involved in the construction Contract shall be included.

D. Selection Process

Within 30 calendar days of Notice to Proceed, or as otherwise mutually agreed upon by the Design-Build Team and NCTA, the Design-Build Team and the NCTA will jointly select the DRB using the following procedure:

1. To form a DRB, the NCTA will provide to the Design-Build Team a copy of the resume and references of the person proposed for the DRB. Likewise, the Design-Build Team

will provide NCTA the resume and references for their proposed DRB Member. The Design-Build Team and the NCTA will confirm the availability, neutrality, experience, and expertise of the nominees. Both the NCTA and Design-Build Team will have the ability to reject the others nominee. The parties shall continue to exchange nominee information until each party has selected a nominee which is agreeable to the other party. The NCTA shall be responsible for notifying the nominees of their selection.

2. Once the two mutually agreeable nominees have confirmed their participation within the DRB, they shall be responsible for selecting a third DRB member, who shall become the DRB Chairperson that is mutually agreeable to the Design-Build Team and the NCTA.

3. This DRB should serve for the life of the Contract. Should the need arise to select a replacement DRB member, the remaining DRB members shall be responsible for selecting an additional member that is mutually agreeable to the Design-Build Team and the NCTA.

E. Three-Party Agreement

The DRB members and the authorized representatives of the Design-Build Team and the NCTA shall execute the Dispute Review Board Three-Party Agreement within 2 weeks after the selections are made.

OPERATION

A. General

In general, the DRB will operate in accordance with this provision. However, it is not desirable to adopt hard-and-fast rules for the functioning of the DRB. The entire procedure shall be kept flexible to adapt to changing situations. The DRB may initiate, with the NCTA's and Design-Build Team's concurrence, new procedures or modifications to existing procedures whenever this is deemed appropriate.

B. Contract Documents, Reports and Information

The NCTA will provide a set of the Contract Documents to each DRB member.

The DRB members will be kept informed of construction activity and other developments by means of timely transmittal of relevant information requested by the DRB and prepared by the Design-Build Team and the NCTA in the normal course of construction, including, but not limited to, periodic reports and minutes of progress meetings. At any time, the DRB may request copies of documents that are normally generated by the Design-Build Team or the NCTA during the course of business throughout the Project. Only during the resolution of a specific dispute may the DRB request reports, documents or other information that is not normally generated during the course of business, and this information shall be limited to that which is specific to this dispute.

C. Periodic Meetings and Visits

If requested, the DRB may participate in the formal partnering process as outlined in the contract. Additional meetings or site visits may be needed as mutually agreed among the NCTA, the Design-Build Team, and the DRB.

Site visits should cover all active segments of the work. Representatives of both the Design-Build Team and the NCTA shall accompany the DRB during project meetings or site visits.

The DRB shall be provided "issue logs" and "Supplemental Agreement/Change Order Logs" throughout the life of the contract.

REVIEW OF DISPUTES

A. General

The Design-Build Team and the NCTA will cooperate to ensure that the DRB considers Disputes promptly, taking into consideration the particular circumstances and the time required to prepare appropriate documentation.

Procedures and time periods may be modified by mutual agreement.

B. Prerequisites to Review

A Dispute is subject to referral to the DRB when either the Design-Build Team or the NCTA believes that bilateral negotiations have reached an impasse. However, the NCTA and Design-Build Team must agree on the central or core issue to bring before the DRB prior to referring a dispute to the DRB.

C. Requesting Review

Either the Design-Build Team or the NCTA may refer a dispute to the DRB. Requests for DRB review shall be submitted in writing to the Chairperson of the DRB. The Request for Review shall state clearly and in full detail the specific core issue of the Dispute to be considered by the DRB. A copy of the request shall be simultaneously provided to the other party.

After conferring with both the Design-Build Team and the NCTA, the DRB Chairperson will establish a submittal/presentation schedule.

Concise written position statements shall be prepared by both the Design-Build Team and the NCTA, with page number references to any supporting documentation, and submitted to each DRB member and simultaneously to the other party 30 days prior to presentation, unless both parties mutually agree otherwise.

Any rebuttals information to the position statements shall be submitted to each DRB member and simultaneously to the other party 14 days prior to presentation, unless both parties mutually agree otherwise.

D. Presentation

Unless otherwise agreed by the DRB, the Design-Build Team and the NCTA, the presentation will be conducted at the NCTA office. However, any location that would be more convenient and still provide all required facilities and access to necessary documentation is satisfactory. Private deliberations of the DRB may be held at any convenient location.

The Design-Build Team and the NCTA shall have representatives in attendance at all presentations. The party which brought the dispute before the DRB will make its presentation first. A full presentation of the dispute shall be allowed without interruption, except from the DRB. Once all information is presented the other party may provide a rebuttal, at which time each party will be allowed successive rebuttals until all aspects of the dispute are fully covered. The DRB members, the Design-Build Team and the NCTA may ask questions, request clarification, or ask for additional data. In difficult or complex cases, additional presentations may be necessary in order to facilitate full consideration and understanding of all the evidence presented by both the Design-Build Team and the NCTA. Both the Design-Build Team and the NCTA shall be provided adequate opportunity to present their evidence, documentation, and statement regarding all issues before the DRB. No documents, materials, reports, analysis or other information of any type shall be referenced in the presentations or considered by the DRB in its review unless the same was previously provided to the other party as supporting documentation for the position statement.

Unless otherwise agreed by the Design-Build Team and the NCTA, presentations will relate to issues of entitlement only. Contract time extensions and compensation will be resolved between NCTA and the Design-Build Team, in accordance with the provisions of the Standard Special Provision entitled “Division One” contained elsewhere in this RFP.

Normally, a formal transcript of the presentations will not be prepared. When requested by either the Design-Build Team or the NCTA, the DRB may allow recordation and transcription with the cost to be allocated to the party requesting such documentation. Such transcript, when prepared, **shall not** constitute the official record of the DRB Review. The record prepared by the DRB shall be the official record of the DRB Review. The DRB may provide for audio or video recordings of the presentations for the use of the DRB only.

The Design-Build Team and the NCTA shall not have their attorneys in attendance at the presentations to counsel and/or advise them.

If either the Design-Build Team or the NCTA fails to appear before the DRB on the date scheduled for the presentations, without justifiable cause, the dispute will continue under the applicable provisions of the 2006 NCDOT Standard Specifications for Roads and Structures and this RFP to include, but not limited to, Articles 104-8, 108-10 107-25 and 109-10 of the Standard Special Provision, Division One found elsewhere in this RFP.

E. Deliberations

After the presentation is concluded, the DRB will confer to formulate its findings and recommendations. All DRB deliberations shall be conducted in private, with all individual views kept confidential.

If the DRB desires technical assistance, the DRB will make a request in writing to both parties (Design-Build Team and NCTA) briefly defining the scope and estimated budget for the services. **Direct attorney advisement or assistance is prohibited.** If mutually agreeable, the Design-Build Team and NCTA will execute an agreement with a service provider. The Design-Build Team and NCTA will equally share the costs for the service provider. In the typical situation the special services provider will respond to the DRB's questions in private consultation between the provider and the DRB and no permanent record of the questions or responses will be required by the Design-Build Team or the NCTA. However, if mutually agreeable, these typical operating procedures may be modified. In arriving at its findings and recommendations the DRB will not be bound by any information provided by the special service provider.

F. Findings and Recommendations

The findings and recommendations of the DRB concerning any dispute are **non-binding** but admissible (see Admissibility section included in this provision).

It is **not** the responsibility of the DRB to resolve the Dispute, only to make a recommendation based upon the contract documents and information supplied and presented before them. It shall remain the responsibility of the Design-Build Team and the NCTA to resolve all Disputes.

The DRB's findings and recommendations will be provided in writing, by certified mail, return receipt requested, to both the Design-Build Team and the NCTA within 14 calendar days of the completion of the presentations. The DRB should set forth, as clearly as possible, the logic and reasoning behind its findings and recommendations. The findings and recommendations will address entitlement only. In difficult or complex cases, and in consideration of the DRB's schedule, this time may be extended by mutual agreement of the DRB, the Design-Build Team and the NCTA.

If the three person DRB is unable to reach unanimity in its findings and recommendations, the DRB will so advise the Design-Build Team and the NCTA in the report of the DRB. The dissenting member shall prepare a minority report to be included with the DRB report.

G. Acceptance or Rejection

Within 30 calendar days of the date of the DRB's findings and recommendations, or such other time specified by the DRB, both the Design-Build Team and the NCTA shall provide, by certified mail return receipt requested, written notice to the other and to the DRB of acceptance or rejection of the DRB's findings and recommendations.

If, with the aid of the DRB's findings and recommendations, the Design-Build Team and the NCTA are able to resolve their Dispute, the NCTA will promptly process any required Contract changes.

If either the Design-Build Team or the NCTA rejects the findings and recommendations of the DRB, the Dispute will continue under the applicable provisions of the NCDOT Standard Specifications for Roads and Structures and this RFP to include, but not be limited to, Articles 104-8, 108-10 107-25 and 109-10 of the Standard Special Provision, Division One found elsewhere in this RFP.

H. Clarification and Reconsideration

Should the dispute remain unresolved because of a request for clarifications of the recommendation or new information or material becomes available which was not available at the time of the presentation, either the Design-Build Team or the NCTA may within the 7 calendar day period following the date of the DRB's findings and recommendations, request in writing, by certified mail return receipt requested, that the DRB clarify or reconsider its findings and recommendations. This information shall be supplied simultaneously to the other party.

Should new information be made available, the other party shall have an opportunity to review such information and respond appropriately.

I. Admissibility

If the DRB's findings and recommendations do not resolve the Dispute, the Contract, the written findings and recommendations, including any minority report, and the qualifications of the DRB members will be admissible as evidence to the extent permitted by law in any subsequent dispute resolution proceeding or forum to establish (a) that a DRB considered the Dispute, (b) the qualifications of the DRB members, and (c) the DRB's findings and recommendations that resulted from the process.

J. Legal Relations

Each DRB member, in the performance of his or her duties on the DRB, is acting in the capacity of an independent agent and not as an employee of either the Design-Build Team or the NCTA.

Each DRB member is acting in a capacity intended to facilitate resolution of Disputes. Accordingly, the Design-Build Team and the NCTA agree that to the fullest extent permitted by law, each DRB member shall be accorded quasi-judicial immunity for any actions or decisions associated with the review and findings and recommendations of Disputes referred to the DRB. No DRB member may be called as a witness by either the Design-Build Team or the NCTA in subsequent proceedings on the dispute. The DRB shall, upon completion of their findings, turn all records of the DRB over to the NCTA for storage and preservation.

By execution of the Three-Party Agreement, the Design-Build Team and the NCTA agree not to pursue legal proceedings against a DRB member for activities related to or consequences resulting from their participation in the DRB.

PAYMENT

A. Method of Measurement

The Design-Build Team and the NCTA shall equally bear the costs and expenses of the DRB.

The DRB members should not engage in activities related to the project, for which compensation is expected, unless requested by either the NCTA or Design-Build Team.

Time spent at formalized meetings or Reviewing the Dispute – Each DRB member will be compensated for actual time spent at the rate of $250 per hour with a maximum of $2,000 per day. This rate shall include all normal incidental expenses such as telephone, fax, postage, courier, printing, and computer services. The DRB activity must be preauthorized by both the Design-Build Team and the NCTA.

Travel Time to and from Preauthorized Meetings – Each DRB member will be compensated for actual travel time to and from DRB meetings at the rate of $50 per hour with a maximum of $200 each way.

Travel Expenses – Travel expenses will be reimbursed at standard NC state rates for transportation, lodging, and meals for each day, or portion thereof, that the DRB member is traveling to or from, or attending, an authorized DRB activity. Expense receipts are required.

The NCTA will provide, at no cost to the Design-Build Team, administrative services such as conference facilities, meeting rooms and copying services during DRB presentations.

The Three Party Agreement and the Special Provisions contain all of the provisions for compensation and expenses of the DRB. All DRB members shall be compensated at the same daily and hourly rate.

Each DRB member may submit invoices for payment for work completed and qualified expenses no more often than once per month during the progress of work. Such invoices shall be in a format approved by the NCTA, and accompanied by a general description of activities performed during that period. The value of work accomplished for payment shall be established from the billing rate and hours expended by the DRB member together with qualified expenses incurred.

The cost records and accounts pertaining to this Agreement shall be kept available for inspection by representatives of the NCTA or Design-Build Team for 5 years after final payment.

No additional compensation for services associated with the DRB, beyond that detailed above, will be provided to the DRB members.

B. Basis of Payment

Payment for accepted work will be made as follows:

The Design-Build Team shall pay the invoices of all DRB members after approval by both the Design-Build Team and the NCTA. The Design-Build Team shall then bill the NCTA for one-half of such invoices, which shall be processed in accordance with Article 104-7 of the Standard Special Provision, Division One, located elsewhere in this RFP.

There shall be no markups applied to expenses connected with the DRB, either by the DRB members or by the Design-Build Team. Regardless of the DRB recommendation, neither the NCTA nor the Design-Build Team shall be entitled to reimbursement of DRB costs from the other party.

If the DRB desires special technical services, both the Design-Build Team and the NCTA must agree to provide the special services, following the procedures included in the Dispute Review Board, Review of Disputes, Deliberations section, contained elsewhere in this provision. If such services are approved and rendered, payment will be made under these provisions in accordance with the Dispute Review Board, Review of Disputes, Deliberations section, contained elsewhere in this provision.

These special provisions and the Three Party Agreement contain all of the provisions for compensation and expenses of the DRB. All DRB members shall be compensated at the same daily and hourly rate.

TRAINING REQUIREMENTS (7-1-95)

The Design-Build Team's attention is directed to the Standard Special Provision "Training Special Provision" included elsewhere in this Request For Proposal.

The number of trainees to be trained on this project shall be thirty (30).

The training requirements for this Contract are entirely independent of the NCDOT Training Program. Trainees used in the performance of this Contract cannot be used to satisfy NCDOT training requirements. Likewise, trainees employed on NCDOT projects cannot be used to offset the training requirements of this Contract.

PRICE PROPOSAL DOCUMENTATION
(1/10/08)

General

The successful Design-Build Team shall submit the original, unaltered Price Proposal documentation or a certified copy of the original, unaltered Price Proposal documentation used to prepare the Price Proposal for this contract to the NCTA in accordance with Section 13 of the Instructions to Proposers (Volume I). By reference, the requirements of Section 13 of the Instructions to Proposers is hereby fully incorporated into these Contract Documents.

Duration and Use

The Price Proposal documentation and affidavit shall remain in escrow until sixty (60) calendar days from the time the Design-Build Team receives full payment on the final estimate; or until such time as the Design-Build Team gives written notice of intent to file a claim, files a written claim, files a written and verified claim, or initiates litigation against the NCTA related to the contract; or until authorized in writing by the Design-Build Team. Upon the giving of written notice of intent to file a claim, filing a written claim, filing a written and verified claim, or the initiation of litigation by the Design-Build Team against the NCTA, or receipt of a letter from the Design-Build Team authorizing release, the NCTA may obtain the release and custody of the Price Proposal documentation. If the Price Proposal documentation remains in escrow sixty (60) calendar days after the time the Design-Build Team receives the final payment and the Design-Build Team has not filed a written claim, filed a written and verified claim, or has not initiated litigation against the NCTA related to the contract, the NCTA shall instruct the banking institution or other bonded document storage facility to release the sealed container to the Design-Build Team.

The Proposer certifies and agrees that the sealed container placed in escrow contains all of the Price Proposal documentation used to determine the Price Proposal and that no other bid documentation shall be relevant or material in litigation over claims brought by the Design-Build Team arising out of this contract.

Confidentiality of Bid Documentation

The Price Proposal documentation and affidavit in escrow are, and will remain, the property of the Proposer. The NC Turnpike Authority has no interest in, or right to, the Price Proposal documentation and affidavit other than to verify the contents and legibility of the Price Proposal documentation unless the Design-Build Team gives written notice of intent to file a claim, files a written claim, files a written and verified claim, or initiates litigation against the NC Turnpike Authority. In the event of such written notice of intent to file a claim, filing of a written claim, filing a written and verified claim, or initiation of litigation against the NC Turnpike Authority, or receipt of a letter from the Design-Build Team authorizing release, the Price Proposal documentation and affidavit may become the property of the NC Turnpike Authority for use in considering any claim or in litigation as the NC Turnpike Authority may deem appropriate.

Any portion or portions of the Price Proposal documentation designated by the Proposer as a "trade secret" at the time the bid documentation is delivered to the NC Turnpike Authority's Chief Engineer shall be protected from disclosure as provided by *G.S. 132-1.2*.

Cost and Escrow Instructions

The cost of the escrow will be borne by the NC Turnpike Authority. The NC Turnpike Authority will provide escrow instructions to the banking institution or other bonded document storage facility consistent with this provision.

Payment

There will be no separate payment for all costs of compilation of the data, container, or verification of the Price Proposal documentation. Payment at the lump sum price for the Design-Build project will be full compensation for all such costs.

THREE-YEAR GUARANTEE

GENERAL

Definitions:

Warranty Initiation Date - The date that constitutes the start date for the warranty term and coincides with the Substantial Completion as determined by NCTA.

Warranty Bond - A bond issued by a surety which guarantees that the warranty requirements, including any observation periods extending beyond the Substantial Completion Date will be satisfied.

Dispute Review Board - The team responsible for resolving disputes between the NCTA and the Design-Build Team regarding any claim of noncompliance with the warranty requirements, as detailed elsewhere within the Contract Documents.

Corrective Work - Work redone, repaired, corrected or replaced pursuant to the terms of this Warranty Provision. This term is used throughout this provision to collectively mean both Corrective Work and Immediate Corrective Work.

Immediate Corrective Work - Work redone, repaired, corrected or replaced that shall be undertaken immediately as it poses an imminent danger to the users of the facilities constructed under this project. If the NCTA determines that Immediate Corrective Work is necessary for public safety, the NCTA or its agent may perform emergency repairs. Prior to such emergency repairs, the NCTA will document the basis for the emergency action and will preserve evidence of the defective condition.

Project Warranty Term

The Warranty Term for each element of the Project shall commence upon Substantial Completion as determined by NCTA . The Warranty Term for municipality utility work shall commence once all water and sewer work for that owner is accepted. Subject to extension under the "Warranty Bond" section of this provision and notwithstanding any warranty term for specific Project elements that may be longer than warranty term set forth herein, the Warranties regarding all elements of the Project shall remain in effect until **three years after Substantial Completion as determined by NCTA.** These warranties are binding on the Design-Build Team's successors, transferees, heirs, and assigns. If NCTA determines that any of the Work has not met the standards set forth in this Provision at any time within the Warranty Term, then the Design-Build Team shall correct such Work as specified below, even if the performance of such Corrective Work extends beyond the stated Warranty Term.

The Design-Build Team shall be responsible for any and all remediation activities at the on-site stream mitigation site for a period of twelve months following NCTA's final acceptance of the stream mitigation site at no additional cost to the NCTA.

Warranty Bond

The Design-Build Team shall furnish a single term warranty bond from a firm licensed to do business in the State of North Carolina, in an amount of five percent of the cost of the contract construction, as a prerequisite of determination of Substantial Completion. This bond will be applicable to the Project Warranty and any specific Project elements that may be set forth elsewhere in this Contract. The warranty bond will be released at the end of the warranty period to include any extension as provided in the "Warranty of Corrective Work" section below. Should such extensions occur on specific project elements, there may be the opportunity to lower the bond amount for such extension to cover the warranty of the Corrective Work. The NCTA will supply the Warranty Bond form upon request.

Initial Project Acceptance

The NCTA and the Design-Build Team shall jointly review all completed Work, or a portion thereof, as determined by the NCTA. If the work does not meet contract requirements, the Design-Build Team shall make all necessary corrections, at their expense, prior to initial acceptance. Initial acceptance will occur as soon as the NCTA confirms in writing, that contract requirements have been met and the Design-Build Team has reached Substantial Completion as defined in the Project Special Provision for "Substantial Completion." The date on which Substantial Completion occurs shall coincide with the Warranty Initiation Date. **Once final acceptance of the Project or portions thereof is attained as defined by the NCTA, routine maintenance of such becomes the responsibility of the NCTA, excluding any items requiring Warranty Corrective Work as detailed within this Provision.**

The date of Substantial Completion/Warranty Initiation Date will be documented and executed jointly by the NCTA and the Design-Build Team with a copy of such being sent to the Design-Build Team's warranty bond surety agent.

The NCTA may accept the work and begin the warranty period, excluding any area needing Corrective Work, to accommodate seasonal limitations or staged construction.

Neither the initial acceptance nor any prior inspection, acceptance or approval by the NCTA diminishes the Design-Build Team's responsibility under this warranty. Acceptance of material, in penalty, under the NCTA's quality assurance program will not relieve the Design-Build Team from meeting the material and workmanship warranty requirements for the accepted material.

Annual Review Process

The NCTA shall employ a private engineering firm to perform an annual review of the pavement and bridge components condition parameters warranted by this Provision. The private engineering firm will perform the appropriate testing, inspections and develop a report with all

evaluation data and digital photographical status of the warranted condition parameters. This report will be dated and certified by a Professional Engineer registered in North Carolina. The report will be submitted directly to the NCTA with copies submitted to the Design-Build Team.

Final Warranty Acceptance

The NCTA and the Design-Build Team shall jointly conduct an inspection of the Project prior to expiration of the warranty term and shall produce a punch list of those items which require Corrective Work prior to fulfillment of the warranty obligation. If requirements of this Provision are not met, the Design-Build Team shall make all necessary corrections, at their expense, prior to expiration of the warranty term.

The date upon which the warranty terminates, including any extension as included in the "Warranty of Corrective Work" section will be documented and executed jointly by the NCTA and the Design-Build Team with a copy of such being sent to the Design-Build Team's warranty bond surety agent.

Corrective Work

Within seven calendar days of the Design-Build Team's receipt of NCTA's notice specifying a failure of any Work to satisfy Design-Build Team's Warranties, or any Subcontractor representation, warranty, guarantee or obligation for which the Design-Build Team is responsible to enforce, the Design-Build Team and NCTA shall mutually agree when and how the Design-Build Team shall remedy such violation. However, in the case that Immediate Corrective Work is required, as indicated by NCTA in its notice, the Design-Build Team and NCTA shall agree on a remedy immediately upon notice by NCTA of such need for immediate work**. No Corrective Work shall occur without NCTA knowledge of such activities or operations.**

The NCTA may elect to have the Corrective Work postponed within the warranty term to minimize traffic disruption provided such Corrective Work poses no safety issues to motorists.

If the Design-Build Team does not use its best efforts to proceed to effectuate such remedy within the agreed time, or if the Design-Build Team and NCTA fail to reach such an agreement within such seven calendar day period (or immediately, in the case of Immediate Corrective Work), then NCTA, after notice to the Design-Build Team, shall have the right to perform or have performed by third parties the necessary remedy, and all costs thereof shall be borne by the Design-Build Team.

Requirements originally developed and detailed in the Contract Documents shall apply throughout the warranty term and to all Corrective Work, including lane closure time restrictions and associated liquidated damages. The Design-Build Team shall be responsible for payment, to NCTA, of any liquidated damages incurred during the warranty term resulting from lane closures within the restricted times as detailed in the Contract Documents. If lane closures are required during restricted times to perform Immediate Corrective Work, then the associated liquidated damages shall apply.

The Design-Build Team shall be responsible for obtaining any required permits, approvals or other consents in connection with the Corrective Work.

Warranty of Corrective Work

The Warranties as to each redone, repaired, corrected or replaced element of the Work shall extend beyond the original warranty period, if necessary, to provide at least a one-year warranty period following acceptance of such Corrective Work thereof by NCTA and acceptance thereof by the appropriate owner.

Subcontractor Warranties

Assignment

Without in any way derogating the Design-Build Team's own representations and warranties and other obligations with respect to all of the Work, the Design-Build Team shall obtain from all Subcontractors and cause to be extended to NCTA, appropriate representations, warranties, guarantees and obligations with respect to the design, materials, workmanship, equipment, tools and supplies furnished by such subcontractor. All representations, warranties, guarantees and obligations of subcontractors shall be written so as to survive all NCTA and Design-Build Team inspections, tests and approvals, and shall run directly to and be enforceable by the Design-Build Team and/or NCTA, including their respective successors and assigns. The Design-Build Team hereby assigns to NCTA all of the Design-Build Team's rights and interest in all extended warranties for periods exceeding the applicable three year Warranty Term (including extensions thereof under the section "Warranty of Corrective Work" included in this provision.), which are received by the Design-Build Team from any of its subcontractors, suppliers or manufacturers.

Enforcement

Upon receipt from NCTA of notice of a failure, to perform Corrective Work needed to satisfy any subcontractor, supplier or manufacturer warranty, representation, guarantee, or obligation, the Design-Build Team shall enforce or perform any such representation, warranty, guarantee or obligation, in addition to Design-Build Team's other obligations hereunder. NCTA's rights under this section, shall commence at the time such representation, warranty, guarantee or obligation is furnished or at the Substantial Completion, whichever is earlier, and shall continue until the expiration of Design-Build Team's relevant warranty term (including extensions thereof under the section "Warranty of Corrective Work" included in this provision). Until such expiration, the Design-Build Team shall be responsible for the cost of any equipment, material, labor (including re-engineering) or shipping, and the Design-Build Team shall be required to replace or repair defective equipment, material or workmanship furnished by any subcontractor, supplier or manufacturer.

No Limitation of Liability

The foregoing warranties are in addition to all rights and remedies available under the Contract Documents or applicable law, and shall not limit the Design-Build Team's liability or

responsibility imposed by the Contract Documents or applicable law with respect to the Work, including liability for design defects, latent construction defects, strict liability, negligence or fraud; provided, however, that, upon expiration of the Warranties, Design-Build Team shall have no further liability to NCTA hereunder for latent construction defects.

Warranty Beneficiaries

In addition to benefiting NCTA and its successors and assigns, the Warranties and subcontractor warranties provided under the "Initial Project Acceptance" section included in this provision, shall inure to the benefit of, and shall be directly enforceable by the NCTA and Utility Owners with respect to those portions of the Work owned or controlled by each such owner.

Remedies for Breach of Warranty

In addition to NCTA's other rights and remedies hereunder, at law or in equity, the Design-Build Team shall be liable for actual damages resulting from any breach of an express or implied warranty or any defect in the Work.

Disputes

Any disagreement between NCTA and the Design-Build Team relating to this warranty provision shall be subject to the Dispute Review Board provisions contained in the Contract Documents and Article 104-8(B) provided that Design-Build Team shall proceed as directed by NCTA pending resolution of the dispute.

Should disputed Corrective Work pose a safety issue to the motorist, the NCTA may (1) direct the Design-Build Team to perform the Corrective Work with costs being documented in accordance with Article 109-3 of the Standard Special Provisions, Division One, included elsewhere in the RFP; or (2) after notice to the Design-Build Team, the NCTA shall have the right to perform or have performed by third parties the necessary remedy, and all costs thereof shall be borne by responsible party upon resolution of the dispute.

Rights and Responsibilities of the NCTA

The NCTA:

A. Reserves the right to approve the schedule proposed by the Design-Build Team to perform warranty work.

B. Reserves the right to approve all materials and specifications used in warranty work.

C. Reserves the right to determine if warranty work performed by the Design-Build Team meets the contract specifications.

D. Reserves the right to perform, or have performed, routine maintenance during the warranty period, which routine maintenance will not diminish the Design-Build Team's responsibility under the warranty.

E Reserves the right, if the Design-Build Team is unable, to perform Immediate Corrective Work to the pavement to prevent an unsafe road condition as determined by the NCTA. The NCTA will attempt to notify the Design-Build Team that work is required to address an unsafe condition. However, should the Design-Build Team be unable to comply with this requirement, to the NCTA's satisfaction and within the time frame required by the NCTA, the NCTA will perform, or have performed any Immediate Corrective Work deemed necessary. Any such Immediate Corrective Work undertaken will not relieve the Design-Build Team from meeting the warranty requirements of this Provision. Any costs associated with the Immediate Corrective Work will be paid by the Design-Build Team if it is determined the cause was from defective materials and/or workmanship.

F. Is responsible for notifying the Design-Build Team, in writing, of any Corrective Work required to meet the warranty requirements.

Rights and Responsibilities of the Design-Build Team.

The Design-Build Team:

A. Shall warrant to the NCTA that the warranted work will be free of defects in materials and workmanship. The warranty bond shall be submitted to the NCTA as a prerequisite of the NCTA determining the project Substantially Complete.

B. Shall be responsible for performing all Corrective Work including, but not limited to, maintaining traffic and restoring all associated pavement features, at the Design-Build Team's expense. Liquidated Damages established in the Contract Documents will be in effect if the proposed traffic plan for Corrective Work requires lane closures during restricted times.

C Shall be responsible for performing all Corrective Work resulting from being in non-compliance with the warranty requirements, using NCTA approved materials and methods.

D. Shall be responsible for performing Corrective Work upon NCTA specifying a failure of any Work to satisfy Design-Build Team's Warranties, unless otherwise directed.

E. Shall notify the NCTA and submit a written course of action for performing the needed Corrective Work a minimum of seven calendar days prior to commencement of Corrective Work, except in the case of Immediate Corrective Work as detailed in this special provision. The submittal must propose a schedule for performing the Corrective Work and the materials and methods to be used.

F Shall submit a traffic control plan and have said plan approved by the NCTA prior to performing Corrective Work and shall adhere to that plan while performing the work.

G. Shall complete all Corrective Work prior to conclusion of the warranty period, or as otherwise agreed to by the NCTA.

H. Shall be liable during the warranty period in the same manner as Design-Build Teams are currently liable for their construction related activities with the NCTA pursuant to the NCDOT 2006 Standard Specification for Roads and Structures and the Standard Special Provisions, Division One, as included elsewhere in the RFP. This liability shall arise and continue only during the period when the Design-Build Team is performing Corrective Work. This liability is in addition to the Design-Build Team performing and/or paying for any required Corrective Work, and shall include liability for injuries and/ or damages and any expenses resulting therefrom which are not attributable to normal wear and tear of traffic and weather, but are due to non-compliant materials, faulty workmanship, and to the operations of the Design-Build Team.

Non-Extension of Contract

This Provision shall not be construed as extending or otherwise affecting the claim process and statute of limitation applicable to this Contract.

Measurement and Payment

All costs associated with this warranty provision, regardless of when such costs are incurred throughout the warranty term of any extensions as provided in the "Warranty of Corrective Work" section included in this provision, shall be included in the lump sum price bid for the project. These costs include but are not limited to, all bonding, engineering, Corrective Work, traffic control, additional testing and inspections, materials, labor and equipment and incidentals necessary to complete and fulfill the requirements herein of this Contract.

The Design-Build Team shall reimburse NCTA for any expenses made necessary by any Corrective Work. Payment shall be provided within 10 Days after the Design-Build Team's receipt of invoice, therefore.

PROJECT WARRANTY

Design-Build Team warrants that:

A. the Work, as completed for the Project, meets all of the requirements of the Contract Documents;

B. the Plans, details and /or drawings selected or prepared for use during construction are appropriate for their intended use;

C. all Plans furnished pursuant to the Contract Documents conform to all professional engineering principles generally accepted as standards of the industry in North Carolina;

D. all Work is performed in accordance with the Released for Construction plans;

E. all Work is in reasonably close conformity with the lines, grades, cross sections, dimensions, and material requirements, including tolerances shown in the contract, unless otherwise documented in a mutually agreeable executed agreement between the NCTA and the Design-Build Team which details the acceptance of the Work in accordance with Article 105-3 of the Standard Special Provisions, Division One, included elsewhere in this RFP.

   No price adjustment or payment made in connection with acceptance of materials or Work pursuant to the Contract Documents or any agreement between the Design-Build Team and NCTA to accept Work, which is not in close conformity, shall in any manner, excuse, waive, impair or negate the warranties described herein or the Design Build Team's obligation or responsibility for such warranties.

   This warranty provision shall in no way relieve the requirement for the initial Work to meet the requirements of the Contract Documents prior to final acceptance.

F. all materials and equipment furnished under the Contract Documents are of good quality and, when installed, are new;

G. all materials, as installed, are suitable for their intended use with appropriate testing conducted to ensure the materials meets or exceeds requirements of the design as approved by the Engineer of Record, provided all requirements of the Contract are met.

MATERIALS & WORKMANSHIP PAVEMENT WARRANTY

Description.

The materials and workmanship pavement warranty shall consist of the warranty bond contained in the "Warranty Bond" section and the terms of this Provision. The warranty criteria presented herein contain information unique to each pavement type and appropriate fix.

Materials & Workmanship Warranty

The Design-Build Team is responsible for correcting defects in the pavement caused by elements within the Design-Build Team's control (i.e., the materials supplied and the workmanship), during the warranty term. Since the NCTA is responsible for the pavement design, the Design-Build Team assumes no responsibility for defects that are design related. If a defect is attributable to both, the materials and/or workmanship and the design, responsibility for correcting the defect shall be shared by the NCTA and the Design-Build Team; the Design-Build Team is responsible for the percentage of fault attributable to the materials and/ or workmanship and the NCTA is responsible for the percentage of fault attributable to the design.

During the warranty period, the Design-Build Team will not be held responsible for pavement distresses that are caused by factors unrelated to materials and workmanship. These include, but are not limited to: chemical and fuel spills, vehicle fires, snow plowing, and quality assurance

testing such as coring. Other factors considered to be beyond the control of the Design-Build Team which may contribute to pavement distress will be considered by the Engineer on a case by case basis upon receipt of a written request from the Design-Build Team.

Evaluation Method.

Pavement evaluations shall be conducted by dividing the project into segments. Each individual Travel Lane will be divided into segments of 528 feet (1/10mile) in length for measuring and quantifying the condition parameters.

Travel Lane(s) - The delineated pavement surface used by traffic. The Travel Lanes shall be the portion of the pavement considered warranted work. Each of the following is considered a separate driving lane:

1. Each individual mainline or Y-line lane, for each direction of travel.
2. The sum of all ramps, loops, and the associated acceleration/deceleration lanes are considered a separate driving lane.
3. The sum of all auxiliary lanes, such as passing and turn lanes is considered a separate driving lane.

Approaches, driveways, shoulders and adjoining transition tapers between various types of pavement are not considered driving lanes or addressed under this Section; however, shall be warranted under the "Project Warranty" section, included in this provision.

The beginning point of the initial segment layout will be the Point of Beginning (POB) of the project or construction limits for Y-lines. Segments will be laid out consecutively to the Point of Ending (POE) of the project. The original segmentation of the project will be used for all successive reviews throughout the warranty period.

Warranty Requirements.

Corrective Work will be required when the threshold limit for any condition parameter, as detailed in the sections below, is exceeded as a result of a defect in materials and/or workmanship.

To determine whether the failure to meet the warranty requirements is a result of defects in materials and/or workmanship, a joint field investigation by the NCTA and the Design-Build Team will be conducted. The NCTA or Design-Build Team may elect to have a forensic investigation conducted. The decision to undertake a forensic investigation, the scope of it, and the selection of the party to conduct it will be agreed to by the NCTA and the Design-Build Team. The forensic investigation will be conducted by a qualified entity and at an AASHTO certified laboratory with the results being final and binding. If agreement cannot be reached, a Dispute Review Board (DRB) may be convened in accordance with the Contract Documents. The DRB will then decide the need for a forensic investigation, its scope and the party to conduct the investigation. All costs related to the forensic investigation will be shared proportionately between the Design-Build Team and the NCTA based on the determined cause of the pavement problem.

WARRANTY CRITERIA FOR NEW HOT MIX ASPHALT PAVEMENT

Application.

This section applies to all components of a multiple lift Hot Mix Asphalt pavement structure placed on stabilized soil or aggregate base course. This section excludes any resurfacing, permeable base course, or partial width (less than 10 feet in width) widening of existing facilities; however, the section "Project Warranty" detailed above shall apply to such asphalt pavement.

Limits of Warranted Work

The warranted work includes all components of a multiple lift hot mix asphalt pavement placed for travel lanes within the project limits, including Y-lines.

Condition Parameters and Threshold Limit

Condition parameters are used to measure the performance of the HMA pavement during the warranty term. Each condition parameter has a threshold limit applied at which time Corrective Work is required.

A. Transverse Crack - A crack, at least five feet in length that is oriented primarily in the transverse direction versus the longitudinal direction. That is, the angle between the overall crack line and the transverse line is less than 45 degrees. It can be either straight or irregular.

B. Longitudinal Crack/Open Joint - A crack or open joint, at least five feet in length that is oriented primarily in the longitudinal direction versus the transverse direction. That is, the angle between the overall crack line and the centerline is less than 45 degrees. It can exist anywhere in the driving lane; i.e., at the pavement centerline joint, wheel path, center of lane, or lane/shoulder joint.

C. De-bonding - A physical separation of two HMA layers. De-bonding will be visually identified as shoving, or the loss of the new surface course. Surface potholes, regardless of depth, will be classified as de-bonding.

D Raveling - Surface disintegration, due to the loss of coarse or fine aggregate material, that occurs over an area or in a continuous longitudinal strip.

E. Flushing - The accumulation of excess asphalt binder on the pavement surface that creates a shiny, reflective condition and becomes tacky to the touch at high temperatures.

F. Rutting - A longitudinal surface depression in the wheel path. It may have associated transverse displacement or bulging.

F. Alligator Cracking - Parallel longitudinal cracks with transverse tears between them exhibiting a pattern similar to an alligator hide. An Alligator Crack typically starts in a wheel path and may extend to other lane locations.

G. Block Cracking - Transverse and longitudinal cracking that has progressed to a pattern that the pavement is broken into blocks of size less than 12" by 12". The shape of each block may be irregular.

H. Popout - A small piece of pavement, aggregate, or debris greater than 0.25 inch in diameter that has broken loose from the surface.

J. Ride Quality/ Pavement Smoothness - Measurement of pavement roughness to establish appropriate ride comfort levels for the motorist on the facility.

K. Skid Resistance - the force developed when a tire that is prevented from rotating slides along the pavement surface as tested in accordance with ASTM E274-90.

Warranty Criteria and Recommended Corrective Work

The table below lists the allowable threshold limit for each condition parameter at which time Corrective Work is required, unless otherwise directed.

The Corrective Work detailed is recommended to outline typical acceptable treatments for the various condition parameters. The NCTA will accept the listed Corrective Work if the work addresses the cause of the condition parameter. The Design-Build Team may use an alternative action subject to NCTA approval. The limits of the Corrective Work shall be approved by NCTA and may include areas that are immediately adjacent to the pavement defect; however, not currently demonstrating defects or the condition parameters detailed above. Any hot mix asphalt requiring removal/replacement to correct deficiencies, for any condition parameter, shall be replaced full-width across the lane.

HOT MIX ASPHALT WARRANTY REQUIREMENTS		
CONDITION PARAMETER	**THRESHOLD LIMIT PER SEGMENT (1) (Length = 528 feet Width = 12 feet)**	**RECOMMENDED CORRECTIVE WORK**
Transverse Cracking	Any transverse crack measuring ≥ 6 feet	Cut and seal
Longitudinal Cracking/ Open Joint	Any longitudinal crack measuring ≥ 25 feet	Cut and seal
Alligator Cracking [7] (Minor)	0 to 4% of segment area	Saw and patch or mill and Resurface affected courses
Alligator Cracking (Major)	≥ 4% of segment area	Mill and resurface affected courses to included subgrade or base repair

Block Cracking (7) (Minor)	0 to 4% of segment area	Saw and patch or mill and resurface affected courses
Block Cracking (Major)	≥ 4% of segment area	Mill and resurface affected courses to included subgrade or base repair
De-bonding (7) (Minor)	0 to 2% of segment area	Saw and patch or mill and resurface affected courses
De-bonding (Major)	≥ 2% of segment area	Mill and Resurface affected courses
Raveling	≥ 8% of segment area	Mill and Resurface affected courses
Flushing	≥4% of segment area	Mill and Resurface affected courses
Rutting (3)	25% of segment length having an avg. rut depth ≥ 3/8 inch (2)	Microsurface or Mill and Resurface (6)
Popout	25 individual popouts in segment	Mill and Resurface affected courses
Ride Quality (IRI)	≥75(4)	Mill, grind, overlay or replace to bring back to within threshold limit
Skid Resistance	≥37(5)	Microsurface or Mill and Resurface (6) to bring back within threshold limit.

(1) Warranty Corrective Work is required upon documentation of the threshold limit being met or exceeded
(2) The rut depth threshold applies to each wheel path independently.
(3) The pavement surface will be evaluated for the presence of rutting on each driving lane throughout the warranty period. Measurement will be made using a high-speed electronic profilometer. These measurements may be confirmed using a straight rigid device that is a minimum of 7 feet long and of sufficient stiffness that it will not deflect from its own weight.
(4) The pavement surface will be evaluated for ride quality in each wheel path. IRI measurement will be an average of the left and right wheel paths.
(5) Skid Number as measured with a locked wheel tester
(6) Recommended action is dependent on the depth of the rut susceptible material.
(7) All alligator cracking, block cracking and debonding are symptomatic of premature pavement failure and require Corrective Work.

WARRANTY CRITERIA FOR NEW JOINTED PORTLAND CEMENT CONCRETE PAVEMENT

Application

This section applies to all components within and the combination thereof to construct new jointed portland cement concrete pavement placed on hot mix asphalt or aggregate base course.

Limits of Warranted Work

The warranted work includes all jointed Portland cement concrete pavement placed for travel lanes within the project limits.

Condition Parameters and Threshold Limit

Condition parameters are used to measure the performance of the concrete pavement during the warranty term. Each condition parameter has a threshold limit applied at which time Corrective Work is required.

A. **Crack** - A visible fissure or surface discontinuity that may or may not extend through the entire slab. Cracks may be singular or in multiple patterns. Crack types are:

1. **Transverse** - A crack, at least five feet in length that is oriented primarily in the transverse direction versus the longitudinal direction. That is, the angle between the overall crack line and the transverse line is less than 45 degrees. It can be either straight or irregular..

2. **Longitudinal** - A crack, at least five feet in length, that is oriented primarily in the longitudinal direction versus the transverse direction. That is, the angle between the overall crack line and the centerline is less than 45 degrees. It can exist anywhere in the driving lane; i.e., at the pavement centerline joint, wheel path, center of lane, or lane/shoulder joint.

3. **Corner** – A crack with orientation generally diagonal and located near a slab corner. It typically intersects both the transverse and longitudinal pavement joints.

4. **Map** - Interconnecting, variable spaced cracks in a random orientation and pattern.

5. **Shrinkage** - A small crack or cracks produced by the loss of contained water during the dehydration process.

B. **Spalling** - Broken or missing piece of concrete contiguous with the perimeter edge of a slab with a surface area exceeding two square inches.

C. **Joint Sealant Failure** - The loss of material integrity consisting of either adhesive failure (debonding), cohesive failure (material separation), or the complete loss of sealant material.

D. Shattered Slab - A pavement slab broken into four or more sections by full-depth cracks.

E. Scaling - The concrete surface has a visible, exposed, rough texture from a loss of either aggregate or mortar.

F. Non-function Joint – Joints or areas within 4 feet of the joint showing distresses include faulting, pumping, spalling, cracking, blowups, and mid-panel cracking or inadequate load transfer.

G. Ride Quality / Pavement Smoothness - Measurement of pavement roughness to establish appropriate ride comfort levels for the motorist on the facility.

H. Skid Resistance - The force developed when a tire that is prevented from rotating slides along the pavement surface as tested in accordance with ASTM E274-90.

Warranty Criteria and Recommended Corrective Work

The table below lists the allowable threshold limit for each condition parameter at which time Corrective Work is required, unless otherwise directed.

The Corrective Work detailed is recommended to outline typical acceptable treatments for the various condition parameters. The NCTA will accept the listed Corrective Work if the work addresses the cause of the condition parameter. The Design-Build Team may use an alternative action subject to NCTA approval. The limits of the Corrective Work shall be approved by NCTA and may include areas that are immediately adjacent to the pavement defect; however, not currently demonstrating defects or the condition parameters detailed above. Concrete Pavement requiring removal/replacement to correct deficiencies, for any condition parameter, may require the pavement to be replaced full-width across the lane and minimum length of 6 feet to ensure long term durability. NCTA will determine if such full width removal is necessary; however a patch greater that 4 feet in length is typically the maximum allowed prior to patching full width.

PORTLAND CEMENT CONCRETE PAVEMENT WARRANTY REQUIREMENTS		
CONDITION PARAMETER	**THRESHOLD LIMITS PER SEGMENT (1) (Length = 528 feet)**	**RECOMMENDED CORRECTIVE WORK (7) (13)**
Transverse Cracking	Any transverse crack measuring ≥ 6 feet	Remove and replace slab(8) (9)
Longitudinal Cracking	Any longitudinal crack measuring ≥ 8 feet	Remove and replace slab(8) (9)
Corner Cracking	≥ 3 corner cracks within the segment	Repair with elastomeric concrete (10)

Map Cracking	≥ 5% of segment area	Remove and replace slab(9)
Shrinkage Cracking	≥ 5% of segment area	Remove and replace
Spalling	≥ 10% of a single 15 slab (2) and ≤ 5 slabs requiring repair (14)	Repair with elastomeric concrete (10)
Joint Sealant Failure	≥ 10% joint length (3) and ≤ 4 slabs requiring repair	Remove and replace seal material(12)
Shattered Slab(4)	Any shattered slab shall be replaced	Full depth removal of slab and replacement
Scaling	≥ 25% of the slab area ≤3 slabs within segment	Diamond grind surface(11)
Nonfunctioning Joint(s)	≥ 3 Non-consecutive joints(15)	Remove pavement full depth a minimum 6 feet either side of joint and replace slab and joint
Ride Quality (IRI)	≥85(5)	Diamond grind(11) , or replace to bring back to within threshold limit
Skid Resistance	≥37(6)	Diamond Grind affected area(11)

(1) Warranty Corrective Work is required upon documentation of the threshold limit being met or exceeded.
(2) Can be non-contiguous. 10% value applies to total perimeter (four sides) of the slab.
(3) Applies to all transverse and longitudinal joints on the perimeter of the slab. Noncontiguous lengths will be summed on a per slab basis.
(4) Shattered slabs will not be an acceptable condition, and shall be removed and replaced as approved by the Engineer.
(5) The pavement surface will be evaluated for ride quality in each wheel path. IRI measurement will be an average of the left and right wheel paths.
(6) Skid Number as measured with a locked wheel tester
(7) If multiple condition parameters are present, the recommended action may be revised. Removal and replacement is required if multiple crack types are present.
(8) The appropriate corrective treatment is dependent on the crack's location and depth.
(9) Dependent on cause.
(10) Repair dependent on area and depth of crack.
(11) Diamond grinding applies to entire slab surface area where corrective action is needed.
(12) Replace with existing material type. Neoprene seals shall be removed and replaced full-width.
(13) All Corrective Work shall be conducted in accordance with the most current procedures and material mixtures recommended by NCDOT Portland Cement Concrete Pavement Repair Manual, unless otherwise approved.
(14) Excessive spall repair throughout the segment may necessitate more substantial repairs to include full depth slab replacement.
(15) Evaluate all joints within defective segment with the MIT Scan. Repairs will be based upon dowel placement and functioning joints within segment.

WARRANTY CRITERIA FOR BRIDGE COMPONENTS

Application

This section applies to the Bridge Deck Surface, Bridge Deck Joints, Bearings, Approach Slab Transitions, and the individual components of such items used in the construction of the Project.

Limits of Warranted Work

The warranted work includes all bridges constructed as part of this Project.

Bridge Deck

Condition Parameters and Threshold Limit

Condition parameters are used to measure the performance of the bridge components during the warranty term. Each condition parameter has a Threshold Limit applied at which time Corrective Work is required

A. Spalling - Broken or missing piece of concrete with a surface area exceeding two square inches.

B. Scaling - The concrete surface has a visible, exposed, rough texture from a loss of either aggregate or mortar.

C. Crack - A visible fissure or surface discontinuity that may or may not extend through the entire slab. Cracks may be singular or in multiple patterns. A map crack is defined as interconnecting, variable spaced cracks in a random orientation and pattern.

D. Skid Resistance - The force developed when a tire that is prevented from rotating slides along the pavement surface

Warranty Criteria and Recommended Corrective Work

The table below lists the allowable threshold limit for each condition parameter at which time Corrective Work is required, unless otherwise directed.

The Corrective Work detailed is recommended to outline typical acceptable treatments for the various condition parameters. The NCTA will accept the listed Corrective Work if the work addresses the cause of the condition parameter. The Design-Build Team may use an alternative action subject to NCTA approval. The limits of the Corrective Work shall be approved by NCTA and may include areas that are immediately adjacent to the pavement defect; however, not currently demonstrating defects or the condition parameters detailed above. Concrete Pavement requiring removal/replacement to correct deficiencies, for any condition parameter, may require the pavement to be replaced full-width across the lane and minimum length of 6 feet to ensure long term durability. NCTA will determine if such full width removal is necessary;

however a patch greater that 4 feet in length is typically the maximum allowed prior to patching full width.

Listed are the parameters when bridge components are considered defective within the warranty term.

BRIDGE DECK WARRANTY REQUIREMENTS		
CONDITION PARAMETER	**THRESHOLD LIMITS (PER INDIVIDUAL BRIDGE) (1)**	**RECOMMENDED CORRECTIVE WORK (2)(3)**
Deck Scaling (Less than 1/4" deep but greater than 1/8" deep)	≥ 20% of the individual bridge deck surface area	Grind defective area; saw cut transverse grooves; seal surface with an approved sealing agent
Deck Scaling (Greater than 1/4")	≥ 20% of the individual bridge deck surface area	Diamond saw the perimeter and remove a minimum of 1 inch deep or to sound concrete and patch with a latex modified concrete
Spalling (Minor)	Repair spalling ≤ 1/2" deep or ≤ 1 square foot	Diamond saw the perimeter and remove a minimum 1 inch deep or to sound concrete; patch with conventional concrete mix or elastomeric concrete
Spalling (Major)	Repair spalling > 1/2" deep or > 1 square foot	Mill or Hydro demolition a minimum 1" deep or to sound concrete; repair with latex modified concrete
Cracking (Map cracking)	0% to 20% of deck surface	Seal surface with an approved sealing agent
Cracking (Map cracking)	Greater than 20% of deck	Mill or Hydro demolition a minimum 1" deep or to sound concrete; repair with latex modified concrete

(1) Warranty Corrective Work is required upon documentation of the threshold limit being met or exceeded
(2) Repairs are dependant upon size, depth and cause; therefore, all corrective work shall be approved by NCTA
(3) If amount of deck repair exceeds 40% of deck surface area, then corrective work shall be performed to entire deck area, unless otherwise directed.

Bridge Deck Joints

Bridge Deck Joints shall include all components of the joint and joint system to include any protective armoring. Bridge deck joints will be considered defective if any of the following conditions are discovered within the warranty term and shall require Corrective Work.

A. Water leakage through the joint;
B. Separation of the seal from the steel or concrete substrate;
C. Failure of bridge deck joint;
D. Sagging of elastomeric seal;
E. Spalling or delamination of the deck concrete within two feet, either side of the joint.

Corrective Work Required – Defective bridge deck joints shall be restored to a "new condition", meeting the original contract and design requirements, in a manner approved by the NCTA.

Bridge Bearings

Bearings shall be considered defective if any of the following conditions are discovered within the warranty term.

A. There is evidence of failure of any of the components of the bearing assembly;
B. The protective coating of the bearing cracks, checks or peels or rusting is present; or
C. The bearing freezes or otherwise fails to allow the bridge to move as designed.

Corrective Work Required- Bearings shall be removed and either replaced or restored to "new condition," meeting the original contract and design requirements, in a manner approved by the NCTA.

Bridge Approach Transition

Bridge Approach Transitions shall be defined as the transition from the roadway pavement onto the bridge approach slab, as shall include the bridge approach slab and adjacent roadway pavement. The Bridge Approach Transition shall be considered defective when the distance as measured with a 10 foot straightedge deviates from a planar surface by more than ½ inch.

Corrective Work Required- Diamond grind, overlay*, grout, or remove and replace the pavement and or the bridge approach slab, as approved by NCTA, to bring the bridge approach transition back to within the ½ inch tolerance.

* only allowed for Hot Mix Asphalt Pavements

OUTSOURCING OUTSIDE THE USA:
(5-16-06) DB1 G150

All work on consultant contracts, services contracts, and construction contracts shall be performed in the United States of America. No work shall be outsourced outside of the United States of America.

Outsourcing for the purpose of this provision is defined as the practice of subcontracting labor, work, services, staffing, or personnel to entities located outside of the United States.

The North Carolina Secretary of Transportation shall approve exceptions to this provision in writing.

PROCEDURE FOR MONITORING BORROW PIT DISCHARGE:

2-20-07 DB1 G181

Water discharge from borrow pit sites shall not cause surface waters to exceed 50 NTUs (nephelometric turbidity unit) in streams not designated as trout waters and 10 NTUs in streams, lakes or reservoirs designated as trout waters. For lakes and reservoirs not designated as trout waters, the turbidity shall not exceed 25 NTUs. If the turbidity exceeds these levels due to natural background conditions, the existing turbidity level shall not be increased.

If during any operating day, the downstream water quality exceeds the standard, the Design-Build Team shall do all of the following:

(A) Either cease discharge or modify the discharge volume or turbidity levels to bring the downstream turbidity levels into compliance, or

(B) Evaluate the upstream conditions to determine if the exceedance of the standard is due to natural background conditions. If the background turbidity measurements exceed the standard, operation of the pit and discharge can continue as long as the stream turbidity levels are not increased due to the discharge.

(C) Measure and record the turbidity test results (time, date and sampler) at all defined sampling locations 30 minutes after startup and at a minimum, one additional sampling of all sampling locations during that 24-hour period in which the borrow pit is discharging.

(D) Notify DWQ within 24 hours of any stream turbidity standard exceedances that are not brought into compliance.

During the Environmental Assessment required by Article 230-4 of the *2006 Standard Specifications for Roads and Structures*, the Design-Build Team shall define the point at which the discharge enters into the State's surface waters and the appropriate sampling locations. Sampling locations shall include points upstream and downstream from the point at which the discharge enters these waters. Upstream sampling location shall be located so that it is not influenced by backwater conditions and represents natural background conditions. Downstream sampling location shall be located at the point where complete mixing of the discharge and receiving water has occurred.

The discharge shall be closely monitored when water from the dewatering activities is introduced into jurisdictional wetlands. Any time visible sedimentation (deposition of sediment) on the wetland surface is observed, the dewatering activity shall be suspended until turbidity levels in the stilling basin can be reduced to a level where sediment deposition does not occur. Staining of

wetland surfaces from suspended clay particles, occurring after evaporation or infiltration, does not constitute sedimentation. No activities shall occur in wetlands that adversely affect the functioning of a wetland. Visible sedimentation shall be considered an indication of possible adverse impacts on wetland use.

The Engineer shall perform independent turbidity tests on a random basis. These results shall be maintained in a log within the project records. Records shall include, at a minimum, turbidity test results, time, date and name of sampler. Should the Engineer's test results exceed those of the Design-Build Team's test results, an immediate test shall be performed jointly with the results superceding the previous test results of both NCTA and/or NCDOT and the Design-Build Team.

The Design-Build Team shall use the *NCDOT Turbidity Reduction Options for Borrow Pits Matrix,* available at http://www.ncdot.org/doh/preconstruct/ps/contracts/letting.html to plan, design, construct, and maintain BMPs to address water quality standards. Tier I Methods include stilling basins which are standard compensatory BMPs. Other Tier I methods are noncompensatory and shall be used when needed to meet the stream turbidity standards. Tier II Methods are also noncompensatory and are options that may be needed for protection of rare or unique resources or where special environmental conditions exist at the site which have led to additional requirements being placed in the DWQ's 401 Certifications and approval letters, Isolated Wetland Permits, Riparian Buffer Authorization or a DOT Reclamation Plan's Environmental Assessment for the specific site. Should the Design-Build Team exhaust all Tier I Methods on a site exclusive of rare or unique resources or special environmental conditions, Tier II Methods may be required by regulators on a case by case basis per supplemental agreement.

The Design-Build Team may use cation exchange capacity (CEC) values from proposed site borings to plan and develop the bid for the project. CEC values exceeding 15 milliequivalents per 100 grams of soil may indicate a high potential for turbidity and should be avoided when dewatering into surface water is proposed.

No additional compensation for monitoring borrow pit discharge shall be paid.

EROSION & SEDIMENT CONTROL/STORMWATER CERTIFICATION

1-16-07 (DB Rev. 3-13-08) DB1 G18

General

The NCTA recognizes the imperative need to have qualified individuals designing, constructing, maintaining, and performing oversight of erosion and sediment control/stormwater components within all transportation facility projects. This accountability and competence is required to assure that the environmental commitments into which the NCTA has entered are in conformity with the requirements of the approved plans, specifications, and permit conditions. To ensure that candidates are qualified to construct, maintain, and oversee environmental related operations, certification programs have established written and/or proficiency standards. The certification issued jointly by the North Carolina Department of Transportation and North Carolina State University is a privileged certification that should be held in high regard.

Schedule and conduct construction activities in a manner that will minimize soil erosion and the resulting sedimentation and turbidity of surface waters. Comply with the requirements herein regardless of whether or not a National Pollutant Discharge Elimination System (NPDES) permit for the work is required.

Establish a chain of responsibility for operations and subcontractors' operations to ensure that the *Erosion and Sediment Control / Stormwater Pollution Prevention Plan* is implemented and maintained over the life of the contract.

(A) *Certified Supervisor* – Provide a certified Erosion and Sediment Control / Stormwater (E&SC/SW) Supervisor to manage the Design-Build Team and subcontractor(s) operations, ensure compliance with Federal, State and Local ordinances and regulations, and to manage the Quality Control Program.

(B) *Certified Foreman* – Provide a certified, trained foreman for each construction operation that increases the potential for soil erosion or the possible sedimentation and turbidity of surface waters.

(C) *Certified Installer* – Provide a certified installer to install or direct the installation for erosion and sediment control / stormwater practices.

(D) *Certified Designer* – Provide a certified designer for the design of the erosion and sediment control / stormwater component of reclamation plans and, if applicable, for the design of the project erosion and sediment control / stormwater plan.

In the case of difference of opinion or interpretation of plan or contract requirements between the Design-Build Team and the Engineer, the Engineer's determination and decision will be final.

Roles and Responsibilities

(A) *Certified Supervisor* - The Certified Supervisor shall be responsible for ensuring erosion and sediment control / stormwater is adequately implemented and maintained on the project and conducting the quality control program. The Certified Supervisor shall be on the project within 24 hours from initial exposure of an erodible surface to the project's final acceptance when questions or concerns arise with erosion and sedimentation control / stormwater issues. Perform the following duties:

(1) (a) Manage Operations - Coordinate and schedule the work of subcontractors so that erosion and sediment control / stormwater measures are fully executed for each operation and in a timely manner over the duration of the contract.

(b) Oversee the work of subcontractors so that appropriate erosion and sediment control / stormwater preventive measures are conformed to at each stage of the work.

(c) Prepare the required weekly erosion control punchlist and submit to the Engineer.
(d) Attend all weekly or monthly construction meetings to discuss the findings of the NPDES inspection and other related issues.
(e) Implement the erosion and sediment control / stormwater site plans requested.
(f) Provide for erosion and sediment control / stormwater methods for the Design-Build Team's temporary work not shown on the plans, such as, but not limited to work platforms, temporary construction, pumping operations, plant and storage yards, and cofferdams.
(g) Acquire applicable permits and comply with requirements for borrow pits, dewatering, and any temporary work conducted by the Design-Build Team in jurisdictional areas.
(h) Conduct all erosion and sediment control / stormwater work in a timely and workmanlike manner.
(i) Fully install erosion and sediment control / stormwater work prior to suspension of the work.
(j) Coordinate with NCTA, NCDOT, Federal, State and Local Regulatory agencies on resolution of erosion and sediment control / stormwater issues due to the Design-Build Team's operations.
(k) Ensure that proper cleanup occurs from vehicle tracking on paved surfaces and / or any location where sediment leaves the right-of-way.
(l) Have available a set of erosion control plans that has been properly updated to reflect necessary plan and field changes for use and review by NCTA and NCDOT personnel as well as regulatory agencies.

(2) Requirements set forth under the NPDES Permit – The NCTA's NPDES permit outlines certain objectives and management measures pertaining to construction activities. The permit references *NCG010000, General Permit to Discharge Stormwater* under the NPDES, and states that NCTA and/or NCDOT shall incorporate the applicable requirements into its delegated Erosion and Sediment Control Program. Some of the requirements are, but are not limited to:

(a) Control project site waste to prevent contamination of surface or ground waters of the state (i.e. construction materials, concrete washout, chemicals, litter, fuels, lubricants, coolants, hydraulic fluids, any other petroleum products, and sanitary waste).
(b) Inspect erosion and sediment control / stormwater devices at least once every 7 calendar days, twice weekly for 303(d) impaired streams, and within 24 hours after a significant rainfall event of 0.5 inches within 24 hours.
(c) Maintain an onsite rain gauge and a record of rainfall amounts and dates.
(d) Maintain erosion and sediment control / stormwater inspection records for review by NCTA, NCDOT and Regulatory personnel upon request.
(e) Implement approved reclamation plans on all borrow pits and waste sites.

(f) Maintain a log of turbidity test results as outlined in the NCDOT's Procedure for Monitoring Borrow Pit Discharge.
(g) Provide secondary containment for bulk storage of liquid materials.
(h) Provide training for employees concerning general erosion and sediment control / stormwater awareness, the NPDES Permit requirements, and the requirements of the *General Permit, NCG010000*.
(i) Report violations of the NPDES permit to the Engineer who will notify the DWQ Regional Office within 24 hours.

(3) Quality Control Program - Maintain a quality control program to control erosion, prevent sedimentation and follow provisions of permits. The quality control program shall:

(a) Follow permit requirements related to the Design-Build Team and subcontractors' construction activities.
(b) Ensure that all operators and / or subcontractor(s) on site have the proper erosion and sediment control / stormwater certification.
(c) Notify the Engineer when the required certified erosion and sediment control / stormwater personnel are not available on the job site when needed.
(d) Conduct the inspections required by the NPDES permit.
(e) Take corrective actions in the proper timeframe as required by the NPDES permit for problem areas identified during the NPDES inspections.
(f) Incorporate erosion control into the work in a timely manner and stabilize disturbed areas with mulch / seed or vegetative cover on a section-by-section basis.
(g) Maintain temporary erosion and sediment control devices.
(h) Remove temporary erosion or sediment control devices when they are no longer necessary as agreed upon by the Engineer.
(i) The Design-Build Team's quality control and inspection procedures shall be subject to review by the Engineer. Maintain NPDES inspection records and make records available at all times for verification by the Engineer.

(B) *Certified Foreman* - At least one Certified Foreman shall be onsite for each type of work listed herein during the respective construction activities to control erosion, prevent sedimentation and follow permit provisions:

(1) Foreman in charge of grading activities
(2) Foreman in charge of bridge or culvert construction over jurisdictional areas
(3) Foreman in charge of utility activities

The Design-Build Team may request to use the same person as the Level II Supervisor and Level II Foreman. This person shall be onsite whenever construction activities as described above are taking place. This request shall be approved by the Engineer prior to work beginning.

The Design-Build Team may request to name a single Level II Foreman to oversee multiple construction activities on small bridge or culvert replacement projects. This request shall be approved by the Engineer prior to work beginning.

(C) *Certified Installers* - Provide at least one onsite, Level I Certified Installer for each of the following erosion and sediment control / stormwater crew:

(1) Seeding and Mulching
(2) Temporary Seeding
(3) Temporary Mulching
(4) Sodding
(5) Silt fence or other perimeter erosion / sediment control device installations
(6) Erosion control blanket installation
(7) Hydraulic tackifier installation
(8) Turbidity curtain installation
(9) Rock ditch check / sediment dam installation
(10) Ditch liner / matting installation
(11) Inlet protection
(12) Riprap placement
(13) Stormwater BMP installations (such as but not limited to level spreaders, retention / detention devices)
(14) Pipe installations within jurisdictional areas

If a *Certified Installer* is not onsite, the Design-Build Team may substitute a Level I Installer with a Level II Foreman, provided the Level II Foreman is not tasked to another crew requiring Level II Foreman oversight.

(D) *Certified Designer* – Include the certification number of the Level III-B Certified Designer on the erosion and sediment control / stormwater component of all reclamation plans and if applicable, the certification number of the Level III-A Certified Designer on the design of the project erosion and sediment control / stormwater plan.

Preconstruction Meeting

Furnish the names of the *Certified Supervisor, Certified Foremen, Certified Installers and Certified Designers* and notify the Engineer in writing of changes in certified personnel over the life of the contract within 2 days of change.

Ethical Responsibility

Any company performing work for the NCTA or NCDOT has the ethical responsibility to fully disclose any reprimand or dismissal of an employee resulting from improper testing or falsification of records.

Revocation or Suspension of Certification

Upon recommendation of NCTA's Chief Engineer to the NCDOT and/or the certification entity, certification for Supervisor, Certified Foremen, Certified Installers and Certified Designer may be revoked or suspended with the issuance of a Continuing Immediate Corrective Action (Continuing ICA), Notice of Violation (NOV), or Cease and Desist Order for erosion and sediment control / stormwater related issues. In such case, the NCTA Chief Engineer reserves the right to require the Design-Build Team to replace the personnel responsible for the citation.

Should any of the following circumstances occur, NCTA's Chief Engineer may recommend to NCDOT suspension or permanent revocation of such certification. In addition, the NCTA reserves the right to require the Design-Build Team to replace the personnel responsible.

(A) Failure to adequately perform the duties as defined within the certification program
(B) Issuance of a Continuing ICA, NOV, or Cease and Desist Order
(C) Failure to fully perform environmental commitments as detailed within the permit conditions and specifications
(D) Demonstration of erroneous documentation or reporting techniques
(E) Cheating or copying another candidate's work on an examination
(F) Intentional falsification of records
(G) Directing a subordinate under direct or indirect supervision to perform any of the above actions
(H) Dismissal from a company for any of the above reasons
(I) Suspension or revocation of one's certification within another state

Suspension or revocation of a certification will be sent by certified mail to the registrant and the Corporate Head of the company that employs the registrant.

A registrant has the right to appeal any adverse action which results in suspension or permanent revocation of certification by responding, in writing, to NCTA's Chief Engineer within 10 calendar days after receiving notice of the proposed adverse action.

NCTA Chief Engineer
5400 Glenwood Avenue
Suite 400
Raleigh, NC 27612

Failure to appeal within 10 calendar days will result in the proposed adverse action becoming effective on the date specified on the certified notice. Failure to appeal within the time specified will result in a waiver of all future appeal rights regarding the adverse action taken. The registrant will not be allowed to perform duties associated with the certification during the appeal process.

NCTA's Chief Engineer will hear the appeal and make a decision within 7 days of hearing the appeal. Decision of NCTA's Chief Engineer will be final and will be made in writing to the registrant.

If a certification is temporarily suspended, the registrant shall pass any applicable written examination and any proficiency examination, at the conclusion of the specified suspension period, prior to having the certification reinstated.

Measurement and Payment

Certified Supervisor, Certified Foremen, Certified Installers and *Certified Designer* shall be incidental to the project for which no direct compensation will be made.

PERMIT MODIFICATIONS (12/31/07)

The NCTA has acquired the USACE Section 404 Permit and the NCDENR (DWQ) Section 401 Water Quality Certification for a portion of this project (R-2635C). This provision outlines permit modification responsibilities of the Design-Build Team as relates to the permits already obtained by NCTA (R-2635C). The Design-Build Team may pursue permit modifications to R-2635C independent of the permit application process for the remainder of the project.

For the Design-Build Team's permitting responsibilities for the remainder of the project (R-2635A and R-2635B), reference the Environmental Permits Scope of Work contained elsewhere in this RFP.

If modifications to these permits (R-2635C) are necessary to accommodate the Design-Build Team's design, construction methods or utility relocations/construction, the Design-Build Team shall be responsible for environmental agency coordination through NCTA and preparing all documents required for the NCTA to obtain permit modifications. The Design-Build Team shall clearly note in the Technical Proposal all items that are anticipated to require permit modifications.

The NCTA will not allow any contract time extensions associated with obtaining permit modifications, public involvement, environmental assessments, or additional agency coordination/approvals. Mobilization of personnel, materials, or equipment for site investigation or construction of the project shall not occur in new jurisdictional areas impacted by design revisions, construction methods, and/or utility relocations/construction prior to obtaining the required permit modifications.

The Design-Build Team shall be responsible for acquiring information and preparing permit drawings that reflect the impacts and minimization efforts as designed by the Design-Build Team. The permit modification application shall consist of, at a minimum, a cover letter, permit drawings, half-size plans, completed impact forms, and a revised Ecosystem Enhancement Program (EEP) acceptance letter, if necessary.

Direct coordination between the Design-Build Team, NCTA, and the NCDOT's State Alternative Delivery Engineer shall be necessary for proper development of the permit modification application. Upon completion of the permit modification application package, the Design-Build Team shall forward the package to the NCTA and the NCDOT State Alternative Delivery Engineer concurrently, for review and acceptance.

Any temporary construction measures, including de-watering, borrow and waste sites, construction access, haul roads, etc. as well as all utility impacts shall be addressed in the permit modification application. The Design-Build Team shall also describe the construction methods for all structures. The description of the temporary impacts on jurisdictional resources shall include restoration plans, schedules, and disposal plans.

In the event additional jurisdictional impacts beyond those identified in the permits received by the NCTA result from design or construction details revised by the Design-Build Team, or from utility relocations or construction, suitable compensatory mitigation through EEP for the additional wetlands and streams shall be the sole responsibility of the Design-Build Team.

The Design-Build Team shall analyze any new areas to be impacted that were not analyzed during the NEPA process or preparation of the permit application. This analysis shall include performing all environmental assessments. The Design-Build Team shall engage the services of a competent environmental consultant to conduct a full environmental investigation to include, but not be limited to, Federally Listed Threatened and Endangered Species, wetlands, streams, avoidance and minimization in jurisdictional areas, Rapanos forms, compensatory mitigation, FEMA compliance, historical, archaeological, and cultural resources surveys in these areas. The environmental consultant shall obtain concurrence through NCDOT from the United States Fish and Wildlife Service to document compliance with Section 7 of the *Endangered Species Act* for those species requiring such concurrence. In addition, the Design-Build Team shall fulfill any other requirements which may be imposed by the permitting agencies.

It is not anticipated that the Jordan Reservoir Buffer Rules will apply to this project. In the unlikely event that these buffer rules are imposed on the project, any additional work due to these buffer rules will be handled in accordance with Article 104-7 of the Standard Special Provisions, Division One, contained elsewhere in this RFP.

CLEARING AND GRUBBING

(3-14-08) DB2 R01

The North Carolina Turnpike Authority is committed to limiting environmental impacts of the project to the extent practicable. Upland forests, which provide habitat for terrestrial wildlife, are instrumental in protecting water and air quality and are one of the natural resources that the NCTA includes in this commitment. For these reasons NCTA is requiring the Design-Build Team to identify and subsequently protect existing upland forests from disturbance within the project right-of-way where feasible. Project safety, constructability and long term project maintenance are not to be compromised in order to implement this commitment. To this end the Design-Build Team shall:

- Identify in the designs the locations where upland trees will be preserved to include quadrants, the median (outside clear recovery zone) and any other locations within the right of way;
- Schedule, coordinate with NCTA, and attend a minimum of two meetings. Two meetings shall occur with representatives from the NCTA, FHWA, USEPA and NCDOT to review the recommended areas for upland tree preservation and discuss the methodology for determining these locations. One meeting shall occur prior to beginning land clearing of any section of the project, and another meeting shall occur after the completion of the Release For Construction (RFC) Roadway and/or other relevant RFC plans to review the plan sheets and discuss the determined and suggested locations for upland forest protection;
- Provide the approach and management plans for implementing the upland forest protection plan in the field with the various contractors and subcontractors;
- Implement the plan such that all project personnel are aware of these upland tree protective zones until the entire project is accepted; and
- Schedule, coordinate with NCTA, and attend additional meetings regarding upland forest preservation areas, if it is determined during construction that conditions have changed such that the upland forest preservation areas identified in the design must be modified.

Perform clearing on this project to the limits established by Method III shown on Standard No. 200.03 of the *2006 NCDOT Roadway Standard Drawings*.

SHPO DOCUMENTATION FOR BORROW/WASTE SITES:
(3-18-08) DB8 R02

Revise the *2006 Standard Specifications* as follows:

Page 2-16, Subarticle 230-1(D), add the words "The Contractor specifically waives" as the first words of the sentence.

Page 2-17, Subarticle 230-4(B) Contractor Furnished Sources, first paragraph, first sentence replace with the following:

Prior to the approval of any borrow sources developed for use on any project, obtain certification from the State Historic Preservation Officer of the State Department of Cultural Resources certifying that the removal of the borrow material from the borrow sources(s) will have no effect on any known district, site building, structure, or object, architectural and/or archaeological that is included or eligible for inclusion in the National Register of Historic Places.

Page 8-9, Article 802-2 General Requirements, add the following as the 1st paragraph:

Prior to the removal of any waste from any project, obtain certification from the State Historic Preservation Officer of the State Department of Cultural Resources certifying that the deposition of the waste material to the proposed waste area will have no effect on any known district, site building, structure, or object, architectural and/or archaeological that is

included or eligible for inclusion in the National Register of Historic Places. Furnish a copy of this certification to the Engineer prior to performing any work in the proposed waste site.

Page 8-10, Article 802-2, General Requirements, 4th paragraph, add the following as the 2nd sentence:

The NCDOT's borrow and waste site reclamation procedures for contracted projects is available on the NCDOT website and shall be used for all borrow and waste sites on this project.

BURNING RESTRICTIONS

(7-1-95) DB2 R05

Open burning is not permitted on any portion of the right-of-way limits established for this project. Do not burn the clearing, grubbing or demolition debris designated for disposal and generated from the project at locations within the project limits, off the project limits or at any waste or borrow sites in these counties. Dispose of the clearing, grubbing and demolition debris by means other than burning, according to state or local rules and regulations.

BUILDING AND APPURTENANCE REMOVAL / DEMOLITION

(12-5-06) DB2 R12

The Design-Build Team shall remove or demolish all buildings and appurtenances, in their entirety, that are located either partially or completely within the project's right of way limits or are located outside the project's right of way limits but within property purchased as an uneconomical remnant in accordance with Sections 210 and 215 of the *2006 Standard Specifications*.

The NCTA, through their Right-of-Way "Agent" will conduct all asbestos assessment and abatement. The Design-Build Team shall consult with the Right-of-Way "Agent" early and often to ensure that the Agent has ample time to perform asbestos assessment and abatement prior to releasing the site to the Design-Build Team for removal of the structures. The Design-Build Team shall notify the Agent of their intent to remove any and all buildings and allow 90 days from the date of notifying the Agent for the Agent to perform the necessary assessment and abatement.

CEMENT AND LIME STABILIZATION OF SUB-GRADE SOILS

General

The Design-Build Team shall be responsible for the following:

1. Performing all laboratory tests in a laboratory certified by the AMRL / NCDOT Laboratory Proficiency Program
2. Sampling Sub-grade soils
3. Conducting Laboratory tests to determine:
   a. Soil classifications

b. Moisture-density relationships
c. Quantity of lime or cement required to achieve specified strengths

4. Designating areas to be stabilized by either lime or cement and the required rates of application
5. Conducting field tests to determine unconfined compressive strength

The Design-Build Team shall take soil samples, after the project has been graded to within 2 inches of final sub-grade elevation. The Design-Build Team shall sample the top 8 inches at a minimum frequency of one sample per 1,000 feet, per each lane, for classification tests; and one sample per 3,000 feet, per each lane, for moisture density tests and lime or cement mix design tests. Additional samples shall be taken to ensure that all the predominant soil types, limits of distribution of these soils and different site conditions have been represented.

Classification Tests

The Design-Build Team shall perform the following tests to determine AASHTO classifications of different soils in accordance with AASHTO specifications as modified by NCDOT. Copies of these modified procedures can be obtained from NCDOT Materials and Test Unit's Soils Laboratory.

TABLE 1

TEST	AASHTO DESIGNATION
Dry Preparation of Disturbed Soils	T-87
Particle Size Analysis of Soils	T-88
Determining the Liquid Limit of Soils	T-89
Determining the Plastic Limit and Plasticity Index of Soils	T-90

Moisture Density Test

Based on the criteria set in Table 2, below, the Design-Build Team shall perform the Moisture Density Tests, using either lime or cement. For the initial laboratory tests the Design-Build Team shall use 10% cement by weight in soil cement and 4% lime by weight, in soil-lime mixtures. The Design-Build Team shall conduct the tests in accordance with AASHTO T-99, and T-134 for soil-lime and soil-cement mixtures, respectively. In each case, The Design-Build Team shall determine the maximum dry density and optimum moisture content.

TABLE 2

CRITERIA FOR SELECTING LIME OR CEMENT		
PROPERTY	**A**	**B**
Percent passing #200 Sieve	35 Max	36 Min
Liquid Limit	40 Max	41 Min
Plasticity Index	10 Max	25 Min

The Design-Build Team shall use cement for all soils meeting criteria in Column A and lime for all soils meeting criteria in Column B. The Design-Build Team may choose either lime or cement for all soils not meeting all criteria in either Column A or B.

DETERMINING THE APPLICATION RATES FOR SOIL-CEMENT AND SOIL-LIME MIXTURES

Soil-Cement Mixtures

For soil-cement mixtures, the Design-Build Team shall be required to do the following:

- Make specimens at optimum moisture content using a quantity of cement in the range of 5 to 12 percent by weight.
- Compact the specimens to a minimum density of 95% of maximum dry density obtained using AASHTO T 134.
- Make a minimum of 2 specimens for each selected cement rate.
- Cure the specimens for 7 days in a moist room maintained at a temperature of 73°F ±2.7° and a humidity of 100%. At the end of the curing period, immerse the specimens in water for 4 hours.
- After immersion, test the specimens in unconfined compression in accordance with ASTM D 1633.
- Report the maximum strength obtained and the corresponding percent strain.
- Select the rate of cement that provides a minimum unconfined compressive strength of 200 psi and a maximum of 400 psi.

Soil-Lime Mixtures

For soil-lime mixtures, the Design-Build Team shall be required to do the following:

- Make specimens at optimum moisture content using a quantity of lime in the range of 3.5 to 6.5 percent by weight.
- Compact specimens to a minimum density of 95% of maximum dry density obtained by AASHTO T99.
- Make a minimum of two specimens for each selected lime rate.
- Cure the specimens in sealed plastic bags for 48 hours in an oven at a temperature of 118° F. Do not immerse the specimens in water at the end of the curing period.
- Test the specimens in unconfined compression in accordance with AASHTO T 208. Report the maximum strength obtained and the corresponding percent strain.
- Select the rate of lime that provides a minimum unconfined compressive strength of 60 psi.

Submittals for Review and Approval Prior to Construction

The Design-Build Team shall adhere to the following submittal guidelines:

- Submit all laboratory test results for review.
- Submit a sketch in plan view showing areas of the project to be stabilized by either lime or cement and application rates for each stabilizer.
- Submit any other documentation that supports the Design-Build Team's recommendations.

Construction of Lime Treated Subgrade

The Design-Build Team shall construct the lime treated sub-grade as specified in Section 501 of the North Carolina Department of Transportation *2006 Standard Specifications for Roads and Structures* with the following exceptions:

Subsection 501-4 Equipment
Contractor's equipment will not require engineer's approval.

Subsection 501-8 (A) General
Paragraph #1 is not applicable to this project.

Subsection 501-9 (B) Preliminary Curing
Amend as follows: Allow a minimum of 2 days and a maximum of 4 days for preliminary curing.

Subsection 501-10 Compacting, Shaping, and Finishing
Last paragraph is not applicable.

Subsection 501-11 Thickness
Last two paragraphs are not applicable.

Subsection 501-15 Method of Measurement
The entire sub-sections are not applicable.

Subsection 501-16 Basis of Payment
The entire sub-section is not applicable.

Construction of Cement Treated Subgrade

The Design-Build Team shall construct the soil cement sub-grade as specified in section 542 of the North Carolina Department of Transportation *2006 Standard Specifications for Roads and Structures*, with the following exceptions:

Subsection 542-4 Equipment
Contractor's equipment will not require Engineer's approval.

Subsection 542-7 Application of Cement
First paragraph is not applicable.

Subsection 542-11 Thickness
Paragraphs 2 and 3 are not applicable.

Subsection 542-16 Method of Measurement
This entire sub-section is not applicable.

Subsection 542-17 Basis of Payment
This entire sub-section is not applicable.

Unconfined Compressive Strength

The Design-Build Team shall allow a minimum of seven days curing before testing for strength.

The lime-stabilized subgrades shall be tested using Dynamic Cone Penetrometer (DCP) in accordance with *Quality Assurance Testing of Lime-Treated Soils Utilizing the Dynamic Cone Penetrometer*, Test Method #1-2005. The Design-Build Team shall adhere to the testing equipment requirements and procedures as outlined in *Dynamic Cone Penetrometer Testing for Subgrade Stability* except that the minimum penetration depth shall be eight inches. Upon

request, a copy of the aforementioned documents can be obtained from the NCDOT Geotechnical Engineering Unit. The required unconfined compressive strength for lime shall be 60 psi, which corresponds to a penetration per blow of approximately 0.5 inches of the Dynamic Cone Penetrometer.

For cement-stabilized subgrades, the Design-Build Team shall make field specimens, cure them for seven days and test them in the laboratory. The minimum and maximum required unconfined compressive strength for soil cement shall be 200 psi and 400 psi, respectively.

For both lime and cement stabilized subgrades, one test shall be required for every 400 feet per lane width at random locations selected using random number tables.

Submittals for Review During Construction

The Design-Build Team shall submit the unconfined compressive strength and dynamic cone penetrometer test results for review and acceptance.

PRICE ADJUSTMENTS FOR ASPHALT BINDER

(3-22-07) DB6 R25

Price adjustments for asphalt binder for plant mix will be made in accordance with Section 620 of the *2006 Standard Specifications.*

When it is determined that the monthly selling price of asphalt binder on the first business day of the calendar month during which the last day of the partial payment period occurs varies either upward or downward from the Base Price Index, the partial payment for that period will be adjusted. The partial payment will be adjusted by adding the difference (+ or -) of the base price index subtracted from the monthly selling price multiplied by the total theoretical quantity of asphalt binder authorized for use in the plant mix placed during the partial payment period involved.

The base price index for asphalt binder for plant mix is 406.54 per ton.

This base price index represents an average of F.O.B. selling prices of asphalt binder at supplier's terminals on April 1, 2008.

PRICE ADJUSTMENTS – ASPHALT CONCRETE PLANT MIX

(2-6-06) DB6 R26

Revise the *2006 Standard Specifications* as follows:

Page 6-27, Article 609-8 and Page 6-49, Article 610-13

Add the following paragraph before the first paragraph:

The “Asphalt Price” used to calculate any price adjustments set forth in this section shall be $40 per theoretical ton. This price shall apply for all mix types.

ROCK BLASTING
(3-13-08)

Description

This project special provision governs fracturing rock for excavation and constructing stable rock cut slopes using controlled, production and trench blasting. Controlled blasting is used to form a certain slope by limiting the effects of blasting with cushion or trim blasting. Another type of controlled blasting known as presplitting is not addressed by this provision. Production blasting is used to fracture rock in manageable sizes for excavation. Trench blasting is used to create trenches in rock for utilities and pipes and construct open ditches. This provision also addresses secondary blasting and blasting adjacent to highway structures in lieu of Article 410-11 of the *2006 NCDOT Standard Specifications for Roads and Structures*.

Exercise care when using bulk ammonium nitrate and fuel oil (ANFO) near open water to prevent ANFO from leaching into lakes, streams, creeks and rivers. Control blasting to avoid damaging public and private property. Design and perform rock blasting such that no flyrock occurs. If flyrock occurs, the Engineer may suspend blasting operations in accordance with Article 108-7 of the Standard Special Provision entitled Divison One contained elsewhere in this RFP and require test blasts and a revised general blast plan. When blasting in the vicinity of an open travelway, have equipment standing by to remove material that interferes with traffic flow.

Perform rock blasting, develop blast plans, provide explosive materials, drill, load and stem holes, record drilling, conduct blast surveys, monitor blasts and submit drilling records, surveys and reports in accordance with the plans, *2006 NCDOT Standard Specifications for Roads and Structures* and this provision.

Project Requirements

Blasting near the Kelly Glenn, Scotts Mill and Ashley Downs subdivisions will be very critical due to the close proximity of populated residential areas. The Design-Build Team shall exercise caution and the utmost care when designing and performing blasts adjacent to these areas.

Pre-blast Surveys

Hire an independent Blast Consultant which is prequalified with NCDOT's Construction Unit to perform the pre-blast surveys, blast monitoring and post-blast surveys (work code 3120). Prequalified firms are included in the Department's Vendor Directory at the following web address:

https://apps.dot.state.nc.us/Vendor/Directory/wktyps.aspx

At a minimum, conduct pre-blast surveys for any building, residence or utility within 250 feet or less of the blast zone. In areas where no buildings, residences, structures or utilities are within 250 feet, conduct pre-blast surveys for any building, residence, structure or utility when the maximum charge per delay (W_{max}) and the distance to the subject structure (D) may result in a

peak particle velocity (PPV) equal to or greater than 0.4 in/sec using the formulas in the "Peak Particle Velocity and Scaled Distance" section of this provision.

Blast Monitoring

Hire an independent Blast Consultant which is prequalified with NCDOT's Construction Unit to perform the pre-blast surveys, blast monitoring, and post-blast surveys (work code 3120).

If buildings, residences, structures or utilities are within 250 feet or less of the blast, monitor, at minimum, the four nearest buildings, residences, structures or utilities to the blast for vibration and air-overpressure (noise).

If no buildings, residences, structures or utilities are within 250 of the blast, at minimum, monitor the nearest building, residence, structure or utility to the blast for vibration and air overpressure (noise).

Definitions

Air-Overpressure or Air Blast (Noise) – The pulsating pressure changes above and below ambient air pressure generated by an explosion. Air-overpressure "linear scale" measurements include low frequency noise with a 2 hertz (Hz) response and are expressed in units of decibels-L (dBL).

Blast Pattern – A plan of blast hole locations or an expression of the burden and spacing distance and their relationship to each other.

Burden – The amount of rock broken by an explosive charge measured as the distance between the blast hole and the nearest free face.

Charge per Delay (W) – The sum of all charge weights firing within any 8 milliseconds (ms) time period. For example, if two 10 lb charges fire at 100 ms and one 15 lb charge fires at 105 ms, the charge per delay would be 35 lbs.

Cushion or Trim Blasting – A controlled blasting technique in which a line of blast holes along a rock face are detonated during the last delay period of the blast. The main burden is moved from the face by production blast holes leaving only a small burden to be removed by the line of blast holes at the face. Charges in these holes are lighter than charges in the production blast holes.

Deck Loading (Decking) – A method of loading blast holes in which two or more explosive charges, called decks or deck charges, are loaded in the same hole separated by stemming or an air cushion.

Delay Blasting – The practice of initiating individual explosive decks, blast holes or rows of holes at predetermined time intervals using delays or delay detonators as compared to firing all blast holes simultaneously.

Flyrock – Rocks propelled through the air by the force of an explosion.

Free Face – A rock surface exposed to air or water that provides room for expansion upon fragmentation.

Magazine – Any building, structure or container, approved for storage of explosive materials other than an explosive manufacturing building.

Misfire – An event where all or some charges in a blast fail (do not detonate) when initiated or a term for any portion of explosive materials that fail to detonate as planned.

Peak Particle Velocity (PPV) – The maximum ground vibration velocity measured in the vertical, longitudinal or transverse direction. PPV measurement units are expressed in inches per second (in/sec).

Scaled Distance (Ds) – A calculated value in units of $ft/lb^{0.5}$ describing relative vibration energy based on distance to a structure (D) and charge per delay (W). Ds is equal to D divided by the square root of W, $Ds = D / W^{0.5}$ or $W = (D / Ds)^2$.

Spacing – The distance between blast holes in a row. In production blasting, the distance is measured parallel to the free face and perpendicular to the burden.

Stemming – Crushed stone placed in the unloaded collar area of blast holes for the purpose of confining explosive charges and limiting rock movement and air-overpressure.

Subdrilling – The portion of a blast hole that is drilled below or beyond the desired excavation depth or limit. Subdrilling is generally required to prevent the occurrence of high or tight areas of unfractured rock between blast holes.

Regulations

Comply with all the latest applicable Federal, State and local codes, laws, rules and regulations as well as professional society standards for the storage, transportation and use of explosives. These include but are not limited to the following:

- The Occupational Safety and Health (OSH) Act of 1970 and the Construction Safety Act (CSA) of 1969, as amended
- Safe Explosives Act, Title XI, Subtitle C of Public Law 107-296; Interim Final Rule
- Title 29, U. S. Code, Section 651 et seq., including safety and health regulations for construction
- Title 27, Code of Federal Regulations (27 CFR), Part 555, U. S. Department of Justice, Bureau of Alcohol, Tobacco, Firearms and Explosives (ATF)
- Organized Crime Control Act of 1970, Title XI, Public Law 91-452, as amended
- Title 49, Code of Federal Regulations (49 CFR), Parts 105-177 (DOT RSPA) & Parts 301-399 (DOT FHA)
- Title 29, Code of Federal Regulations (29 CFR), Parts 1910 & 1926, N. C. Department of Labor, Division of Occupational Safety and Health
- *The Mining Act of 1971, North Carolina General Statute, Chapter 74, Article 7*, as amended
- *Fire Code of North Carolina, Section 105.6.15 Explosives*
- Administrative Rules, 13 NCAC 06.0521 – 13 NCAC 06.0526, N. C. Department of Labor
- "A Guide to the Safe Storage of Explosive Materials" and "North Carolina Occupational Safety and Health Standards in Construction for Blasting & Use of Explosives", N. C. Department of Labor

Keep a copy of all regulations listed above at the project site.

Non-regulatory Industry Support Organizations:

- Blast Monitoring Equipment Operation Standards (1999), Vibration Subcommittee of the International Society of Explosive Engineers (ISEE)
- Institute of Makers of Explosives (IME) Safety Library Publications (SLPs)

In case of conflict, the more stringent regulation applies.

Submittals

In lieu of a blasting plan in accordance with Article 107-11 of the Standard Special Provisions, Division One, located elsewhere in this RFP, the following submittals are required for rock blasting.

- Blasting Contractor Personnel and Experience
- General Blast Plan including Blast Monitoring Consultant
- Site Specific Blast Plans including Pre-blast Surveys
- Post-blast Reports including Drilling Records, Blast Monitoring Report and Blast Damage Report

Allow 14 calendar days upon receipt by the NCTA for the review and acceptance of the Blasting Contractor personnel and general blast plan. Provide these submittals in both electronic (pdf format on CD or DVD) and hard copy form to the NCTA.

Submit a hard copy of the site specific blast plans and post-blast reports to the NCTA. After completing all blasting for a cut, structure or an excavation, submit electronic copies (pdf format on CD or DVD) of all site specific blast plans and post-blast reports.

The Engineer may suspend blasting operations in accordance with Article 108-7 of the Standard Special Provisions, Division One, located elsewhere in this RFP, if submittals are incomplete or not provided.

(A) Blasting Contractor Personnel and Experience

The Engineer may waive this submittal if a Blasting Consultant is not required and the Blasting Contractor and Blaster-in-Charge for this project were previously accepted within the last year for another NCDOT or NCTA project with subsurface conditions and blasting of a similar scope and complexity.

Obtain acceptance of the Blasting Contractor personnel and experience before submitting a general blast plan.

(1) Blasting Contractor

Use a Blasting Contractor prequalified by the NCDOT Construction Unit for rock blasting work (work code 070). Submit documentation that the Blasting Contractor has successfully completed at least 5 blasting projects within the last 3 years with subsurface conditions and blasting of a similar scope and complexity. Documentation should include the General Contractor, Owner's name and current contact information with descriptions of past project experience.

(2) Blaster-in-Charge

The Blaster-in-Charge shall have total authority over the handling, use and security of explosives and shall be responsible for coordinating, planning and supervising explosives use. The Blaster-in-Charge shall also be responsible for designing blasts and preparing blast plans. An approved Blaster-in-Charge is required to be on-site during blasting.

Submit documentation that the Blaster-in-Charge and any alternate Blasters-in-Charge has a minimum of 5 years experience in blasting with past projects of similar scope and complexity. Documentation should include resumes, references, certifications, project lists, experience descriptions and details, etc. If there is a change in the Blaster-in-Charge, discontinue explosives use until a new Blaster-in-Charge is submitted and accepted.

(3) Blast Monitoring Consultant

When a Blast Monitoring Consultant is required in the "Project Requirements" section of this provision, submit the consultant's name with the general blast plan. The Blast Monitoring Consultant shall not be an employee of the Blasting Contractor or any affiliated companies or product suppliers.

(B) Blast Plans

Blast plans are for quality control and record keeping purposes and shall be signed by the Blaster-in-Charge. Review and acceptance of blast plans does not relieve the Design-Build Team of responsibility for the blast results or liability in accordance with Articles 107-11 and 107-12 of the Standard Special Provisions, Division One, located elsewhere in this RFP.

(1) General Blast Plan

Submit a general blast plan before beginning drilling or when revised drilling or blasting methods are proposed.

At a minimum, include the following in the plan:

- Work procedures and safety precautions for the storage, transportation, handling and detonation of explosives

- Explosive products and devices for dry and wet blast holes including explosives, primers and detonators with material safety data sheets
- Drilling equipment and methods for maintaining blast hole alignment
- Typical plan, profile and sectional views for both production and controlled blasting showing hole diameter, depth, inclination and spacing, maximum blast limits, burden, subdrill depth and maximum charge per delay
- Initiation and delay methods and delay times
- Site specific blast plan format
- Blast hole drill log format
- Pre-blast survey criteria and method
- Blast monitoring report format and equipment including calibration information
- Post-blast report format
- Test blast locations when required

Do not deliver explosives to the project site until the general blast plan is reviewed and accepted by the NCTA.

(2) Site Specific Blast Plan

After the general blast plan is accepted, submit a site specific blast plan at least 24 hours in advance of each blast. Site specific blast plans may be waived for non-critical blasts as determined by the Engineer. The following is required for the site specific blast plan:

- Scaled drawings of the blast area with cross-sections showing the beginning and ending stations, hole diameter, depth, inclination, spacing, burden, subdrill depth and free face location and any joints, bedding planes, weathered zones, voids or other significant rock structure that may influence the blast
- A loading pattern diagram showing the location and amount of each type of explosive including primers and detonators
- The locations and depths of stemming, column heights and maximum charge per delay for each type of loading
- A delay and initiation diagram showing delay pattern, sequence and times
- Pre-blast surveys (once per structure; not required when submitted for a prior blast)
- Identify average depth of overburden material and how this material will be managed during production blasting

For site specific blast plans do not exceed the maximum charge per delay accepted in the general blast plan or submit a revised general blast plan to increase the maximum charge per delay allowed.

(C) Pre-blast Surveys and Post-blast Reports

(1) Peak Particle Velocity and Scaled Distance

Use the following formulas to determine peak particle velocity (PPV) and scaled distance (Ds).

$PPV = K(Ds)^m$ and $Ds = D / (W_{max})^{0.5}$

where: PPV = Peak Particle Velocity (in/sec)
K and m = Site specific constants defining initial energy and decay
Ds = Scaled Distance ($ft/lb^{0.5}$)
D = Distance to subject structure (ft)
W_{max} = Maximum charge per delay (lbs)

Typically, a K of 240 and an m of -1.6 may be used for the equations above. However, K and m are site specific and may be determined by performing a regression analysis of multiple PPV and Ds data pairs. Select K and m based on actual site conditions, rock type and structure, subsurface information and blast monitoring measurements.

(2) Pre-blast Survey

Conduct pre-blast surveys in accordance with the "Project Requirements" section of this provision and the accepted general blast plan. At a minimum, include the following in the survey:

- Summary naming the person who performed the survey and comments about each structure and existing condition
- Sketches of interior and exterior walls and foundations with existing cracks and a written description of the cracks including the length, width, type and angle
- 4 x 6 inch color 35-mm or minimum 5-megapixel digital photographs or miniDV or DVD digital video documenting the existing cracks and condition of each structure

Light Detection and Ranging (LIDAR) may also be utilized for documentation in Pre-blast Surveys with the approval of NCTA.

Submit pre-blast surveys with site specific blast plans.

(3) Post-blast Report

Within 3 days after each blast or before the next blast, whichever is sooner, submit a post-blast report signed by the Blaster-in-Charge that includes the following:

- Results and effectiveness of the blast and any proposed changes to subsequent site specific blast plans
- Blast monitoring report
- Blast damage report when necessary
- Drilling records including blast pattern and blast hole drill logs

Light Detection and Ranging (LIDAR) may also be utilized for documentation in Post-blast Reports with the approval of NCTA.

(a) Blast Monitoring

Furnish seismographs capable of measuring particle velocities in the longitudinal, vertical and horizontal directions. Use monitoring equipment calibrated within one year of the date the data is collected. Interpret the recorded data and submit a blast monitoring report signed by the Blast Monitoring Consultant with the post-blast report that includes the following for each monitoring location:

- Type, identification and specific location of monitoring equipment
- Distance and direction to blast
- PPV in each direction and peak vector sum
- Maximum air-overpressure

If damage occurs from blasting, notify the Engineer immediately. Submit a blast damage report signed by the Blaster-in-Charge and Blast Monitoring Consultant with the post-blast report that includes the following:

- Property owner's (and injured person's, if any) names, addresses and telephone numbers
- Details and description of property damage (and injury, if any) with photos or video
- Any associated tort claims, complaint letters and other applicable information

(b) Drilling Records

Identify each blast hole with a number on a blast pattern. Log the hole number, total depth, date drilled and the depth and description of significant conditions encountered such as water, voids and weak or jointed seams. Submit the blast pattern and blast hole drill logs signed by the Driller with the post-blast report.

Blast Design Requirements

(A) Vibration and Air-overpressure

Design blasts for the vibration and air-overpressure (noise) detailed below.

Variable	Warning Level	Not-to-Exceed Limit
Vibration (PPV) > 40 Hz	0.75 in/sec	1.0 in/sec
Vibration (PPV) < 40 Hz	0.40 in/sec	0.50 in/sec
Air-overpressure (noise)	120 dBL	133 dBL

If warning levels are exceeded, the Engineer may require additional monitoring. If not-to-exceed limits are exceeded, the Engineer may suspend blasting operations in accordance with Article 108-7 of the Standard Special Provisions, Division One, located elsewhere in this RFP, require test blasts and a revised general blast plan, or require the use of a blasting consultant during future blasting operations.

(B) Production Blasts

Design production blasts in accordance with the following unless otherwise approved:

- Maintain a minimum 6 feet clearance between the production blast holes and final cut slope face
- Diameter of production blast holes may not exceed 6 inches
- Do not drill production blast holes below the bottom of adjacent controlled blast holes
- Use delay blasting to detonate production blast holes towards a free face

(C) Controlled Blasts

Controlled blasts are required for final cut slopes steeper than 2:1 (H:V) when the height of the rock face from the toe of the slope measured vertically, exceeds 15 feet.

(D) Cushion Blasts

Cushion blasts refer to either trim or cushion blasting. Design cushion blasts in accordance with the following unless otherwise approved:

- Diameter of cushion blast holes may not exceed 6 inches
- Minimize subdrilling to only that required for excavation of the final cut slopes
- Do not subdrill below final grade
- Bench height or lift thickness may not exceed 25 feet
- Use a maximum of half the charge density and burden of the production blast holes for the cushion blast holes
- Do not use bulk ANFO or any other bulk loaded products
- Fire cushion blast holes after production blast holes with a minimum 25 ms delay

(E) Trench Blasts

Design trench blasts in accordance with the following unless otherwise approved:

- Diameter of trench blast holes may not exceed 3 inches
- Do not use bulk ANFO or any other bulk loaded products
- Use cartridge explosives or other types of explosives specifically designed for trench blasting
- Use a charge diameter ½ to ¾ inch less than the diameter of the trench blast holes

(F) Test Blasts

A test blast is defined as drilling, blasting and excavation of a test section before beginning or restarting full scale blasting.

Test blasts are required for any blasting occurring within 250 feet or less of any building, residence, structure or utility.

When a test blast is required, perform one or more test blasts for both production and controlled blasting (cushion or trim blasting) or trench blasting before beginning full scale blasting. Submit proposed test blast locations with the general blast plan. Also, if the Engineer suspends blasting operations after full scale blasting has begun, one or more test blasts may be required before resuming blasting. Inform the Engineer of the test blast locations before submitting any site specific blast plans.

Perform test blasts in accordance with the submittal, blast design and construction requirements except submit site specific blast plans for test blasts 72 hours before beginning drilling. Full scale blasting may not begin or resume until the test blasts are acceptable to the Engineer. The Engineer will not consider whether a test blast is acceptable until the rock face is exposed and the post-blast report is submitted. Examples of results that may be unacceptable include excessive vibration, air-overpressure or flyrock, overbreakage, damage to the final cut slope face and overhangs.

Construction Methods

Conduct a pre-blast meeting with the Blaster-in-Charge, Blast Monitoring Consultant and NCTA to discuss the blasting and associated activities. This meeting should occur after the general blast plan is accepted and before submitting the site specific blast plan for the first blast on the project.

Drill and blast in accordance with site specific blast plans, the general blast plan, and this provision. Use explosives in accordance with all applicable government regulations, professional society standards and manufacturer guidelines and recommendations.

Remove appropriate amount of overburden material to prevent caving and/or contamination of the blast holes and to prevent uncontrolled distribution of the overburden during blasting.

Drill blast holes within 3 inches of plan location and control drilling to maintain the final cut slope angle. Accurately determine the angle at which the drill steel enters the rock. Cover all blast holes after drilling to prevent unwanted backfill. Identify and mark each hole with hole number and depth. Blast holes shall be free of obstructions for the entire depth. Load holes without dislodging material or caving in the blast hole wall. Use standard size 67 and 78M course aggregate in accordance with Section 1005 of the *2006 NCDOT Standard Specifications for Roads and Structures* for stemming. Stem blast holes with diameters of 5” (250 mm) or greater with no. 67 coarse aggregate and blast holes with diameters less than 5” (250 mm) with no. 78M coarse aggregate. Do not stem blast holes with drill cuttings. Matting is required when blasting in close proximity to buildings, residences, structures, utilities, traffic and populated areas.

Blasting mats shall be used to control blast debris unless the Design-Build Team can demonstrate alternative methods to confining the material during blasting operations.

At least 7 days prior to the initial blast, notify all occupants/owners of residences, businesses, structures and utilities in the surrounding area of the anticipated blast schedule. Subsequent scheduled blasts shall require a 24 hour notice.

Check for misfires immediately after each blast before signaling all clear. Remove any loose, hanging or potentially dangerous conditions by hand or machine scaling methods. Resume drilling only after scaling is complete.

When the height of a cut requires multiple lifts or benches, offset the controlled blast holes for each subsequent lift the minimum distance necessary to allow for drill equipment clearances. Adjust the alignment of controlled blast holes to account for this offset as well as any drift that occurred in the preceding lift.

The Engineer may suspend blasting operations in accordance with Article 108-7 of the Standard Special Provisions, Division One, located elsewhere in this RFP, when vibration or air-overpressure limits are exceeded, flyrock is evident or unsatisfactory rock cut slopes are produced.

Remove all loose material from final rock faces by scaling. The Design-Build Team is responsible for the final rock face. If blasting damages the final rock face, stabilize the slope with a method acceptable to the NCTA.

Secondary Blasting

Secondary blasting is used to reduce the size of naturally occurring boulders or those resulting from initial blasting. Secondary blasting methods include block holing or boulder busting. Block holing or boulder busting is the breaking of boulders by loading and firing small explosive charges in small diameter blast holes. Submit a combined general and site specific blast plan for secondary blasting. The Engineer may waive the pre-blast surveys, blast monitoring and post-blast reports at their discretion.

Mud capping, which is defined as placing an unconfined explosive charge in contact with a rock surface without the use of a blast hole and covering it with mud, is not allowed.

Blasting Adjacent to Highway Structures

Do not blast adjacent to highway structures until the concrete strength reaches 3000 psi. When blasting adjacent to highway structures, limit PPV to 0.4 in/sec measured at a location on the structure nearest the blast. Reference monitoring requirements.

When blasting for foundation excavation, submit a combined general and site specific blast plan. The Engineer may waive the pre-blast surveys, blast monitoring and post-blast reports at their discretion.

USE OF ELECTRONIC DESIGN FILES

The Design-Build Team shall develop coordinately correct MicroStation electronic design plans (three dimensional models optional) adhering to Roadway Design Guidelines for Design-Build Projects located at:

http://www.ncdot.org/doh/preconstruct/altern/design_build/RoadwayGuidelines080107.pdf

The Design-Build Team shall adhere to the surveying/ construction layout requirements detailed in Section 801 of the NCDOT *2006 Standard Specifications for Roads and Structures*. Should the Design-Build Team elect to design a three dimensional project model and integrate such model with GPS machine guidance during project construction, Section 801 may be modified provided the Design-Build Team can demonstrate an acceptable alternative approach. The Design-Build Team shall submit, for approval, a plan detailing procedures for surveying/construction layout that will ensure construction tolerances detailed within the Contract Documents are accomplished. Additionally, this plan shall detail the procedures that the Design-Build Team CEI firm will employ to verify such construction tolerances are met. The Design-Build Team shall also demonstrate that the model, in conjunction with the proposed GPS machine guidance procedures, is capable of achieving the construction tolerances detailed within the Contract Documents. If the surveying/construction layout/ oversight plan or machine accuracy control is deemed unacceptable by the NCTA, during any part of planning, design, or construction, the Design-Build Team may be required to revert back to requirements of Section 801 of the Standard Specifications.

Project Oversight

Once accepted by NCTA, the Design-Build Team shall electronically provide the MicroStation Released For Construction (RFC) plans and associated three dimensional model, if created, to the Design-Build CEI firm and NCTA prior to construction of that work element. Any revisions to such files shall also be provided by the Design-Build Team prior to construction of that work element.

All accepted MicroStation project design files and digital terrain models (existing or proposed) shall be made available electronically to the Design-Build CEI firm and the NCTA for use in the project oversight process. The Design-Build CEI Firm and the NCTA shall utilize such MicroStation electronic design files and any proposed three dimensional models in the project oversight process. The Design-Build Team CEI firm shall utilize a computer application which integrates coordinately correct electronic plans (three dimensional models optional) with physical GPS location, construction oversight processes, and asset inventory/quantity management. Such computer application shall be *Bentley OnSite Electronic Field Book for Stakeout and Inspection* or an approved equal. Such computer application can be used for the quantity management, project documentation, and as-built plan development contained in the CEI Scope of Work.

As-Built Plans

Regardless of the surveying/construction layout used, the Design-Build Team shall be responsible for providing coordinately correct as-built plans, which are calibrated to the state and project coordinate grid, detailing all assets, items and features included within the design.

DESIGN REFERENCES

Design references developed and published by NCDOT and/ or other agencies and adopted for use by NCTA which are to be used in the design of this project may be obtained by contacting the Contract Office of the NCDOT Project Services Unit. Standard prices for materials, which the NCDOT normally sells for a fee, will be in effect. The Design-Build Team is responsible for designing in accordance with the applicable documents and current revisions and supplements thereto. Unique design guides created by the NCTA are available at no charge from the NCTA website.

REVIEW OF DESIGN SUBMITTALS

Major design milestones and required design submittals shall be identified as activities on the CPM. Unless otherwise noted in the RFP, submittals will be reviewed within 10 working days (15 days for temporary structures, overhead sign assemblies, MSE walls, FEMA compliance documents and temporary shoring) from the date of receipt by NCDOT and NCTA unless otherwise stipulated in the scope of work. During the review process, the NCTA may require that a submittal be revised and re-submitted. However, if all issues are not resolved with the third submittal of a particular plan submittal, the Design-Build Team may request a meeting with the NCTA Project Manager, or the NCTA will engage the Design-Build Team Project Manager to assist in the expeditious resolution of the remaining issues surrounding that submittal.
All submittals shall be prepared and submitted in accordance with the "*Design-Build Submittal Guidelines*", which by reference are incorporated and made a part of this contract. All submittals shall be made concurrently to the NCTA Project Manager, the NCTA Chief Engineer and the NCDOT State Alternative Delivery Engineer. The NCTA or NCDOT will not accept subsequent submittals until prior submittal reviews have been completed for that item. The Design-Build Team shall inform the NCTA Chief Engineer and the NCDOT State Alternative Delivery Engineer in writing of any proposed changes to the NCTA and/or NCDOT preliminary designs, Technical Proposal and / or previously reviewed submittals, and obtain approval prior to incorporation. The Design-Build Team shall prioritize submittals in the event that multiple submittals are made concurrently. All submittals shall include pertinent Special Provisions. No work shall be performed prior to North Carolina Turnpike Authority, FHWA and NCDOT review of the design submittals.

No review, approval, suggestion, or comment of NCDOT, FHWA or NCTA with respect to any design submittal shall diminish, reduce, mitigate, or waive the Design-Build Team's responsibility and liability for the design or design submittal.

All designs shall be in Microstation format using Geopak software (current version used by the NCDOT). Geopak drainage is not required; however, it is strongly encouraged to assist in the development of the coordinately correct As-Built plans.

The Design-Build Team shall certify all plans, specifications, estimates and engineering data furnished by the Team.

The review of design plans by the NCTA is not intended to reflect a reviewer's personal preferences, but rather to ensure that all Contract requirements are met, sound engineering judgment is exercised by the Design-Build Team, and that the Design-Build Team adheres to all Referenced Documents, including but not limited to, design standards, codes, memos and manuals. As such, the award of the Design-Build contract does not in any way imply that the NCTA accepts the details of the Technical Proposal submitted by the Design-Build Team.

DESIGN, CONSTRUCTION & CEI WORK PERFORMED BY DESIGN-BUILD TEAM

The Design-Build Team shall acknowledge that Provided Materials furnished by the NCTA and/or NCDOT are preliminary and provided solely to assist the Design-Build Team in the development of the project design. The Design-Build Team shall be fully and totally responsible for the accuracy and completeness of all work performed under this contract and shall save the NCTA and NCDOT harmless and shall be fully liable for any additional costs and all claims against the NCTA and NCDOT which may arise due to errors, omissions and negligence of the Design-Build Team in performing the work required by this contract.

There shall be no assignment, subletting or transfer of the interest of the Design-Build Team in any of the work covered by the Contract without the written consent of the NCTA, except that the Design-Build Team may, with prior notification of such action to the NCTA, sublet property searches and related services without further approval of the NCTA.

All work by the Design-Build Team shall be performed in a manner satisfactory to the NCTA and in accordance with the established customs, practices, and procedures of the NCDOT and NCTA, and in conformity with the standards adopted by the American Association of State Highway Transportation Officials, and approved by the U.S. Secretary of Transportation as provided in Title 23, U.S. Code, Section 109 (b). The decision of the North Carolina Turnpike Authority shall control in all questions regarding location, type of design, dimension of design, and similar questions.

Alternate designs, details, or construction practices (such as those employed by other states, but not standard practice in NC) are subject to North Carolina Turnpike Authority review and will be evaluated on a case by case basis.

ETHICS POLICY

Employees employed by the Design-Build Team or employees employed by any subconsultant for the Design-Build Team to provide services for this project shall comply with the North Carolina Turnpike Authority's and NCDOT's ethics policies. Failure to comply with the ethics policy will result in the employee's removal from the project and may result in removal of the Company from consideration on future NCTA projects and/or in the recommendation to the NCDOT that the Company be removed from the NCDOT's appropriate prequalified list.

APPROVAL OF PERSONNEL

The North Carolina Turnpike Authority will have the right to approve or reject for cause any personnel assigned to a project by the Design-Build Team.

The Design-Build Team or any subcontractor for the Design-Build Team which are employed to provide services for this project shall not discuss employment opportunities or engage the services of any person or persons, now in the employment of the NCTA or NCDOT during the time of this contract, without written consent of the NCTA or NCDOT, as applicable.

In the event of engagement, the Design-Build Team or their subcontractors shall restrict such person or persons from working on any of the Design-Build Team's contracted projects in which the person or persons were "formerly involved" while employed by the NCTA or NCDOT. The restriction period shall be for the duration of the contracted project with which the person was involved. *Former Involvement* shall be defined as active participation in any of the following activities:

Drafting the contract
Defining the scope of the contract
Selection of the Design-Build Team
Negotiation of the cost of the contract (including calculating manhours or fees); and
Administration of the contract

An exception to these terms may be granted when recommended by the NCTA Executive Director or Secretary of Transportation, as applicable, and approved by the NCTA Board of Directors or NCDOT Board of Transportation, as applicable.

Failure to comply with the terms stated above in this section shall be grounds for termination of this contract and/or not being considered for selection of work on future contracts for a period of one year.

The Design-Build Team shall not change team members, subconsultants or subcontractors identified in the Statement of Qualifications (SOQ) or Technical Proposal without written consent of the Engineer. In addition, subconsultants and subcontractors not identified in the SOQ or Technical Proposal shall not perform any work without written consent by the Engineer. Individual offices of the Design-Build Team not identified in the Statement of Qualifications or the Technical Proposal submitted shall not perform any work without written consent by the Engineer. Failure to comply with this requirement may be justification for removing the Team from further consideration for this project and disqualification from submitting on future NCTA Design-Build Projects.

ROADWAY SCOPE OF WORK (04-15-08)

The Design-Build Team shall design and construct the project in accordance with the Citizens Informational Workshop Map dated February 8, 2007 distributed by the NCTA, except as otherwise noted herein. The NCTA will also provide Right of Way Plans for the R-2635C segment of the project that may have incorporated adjustments to the aforementioned map. The Design-Build Team shall incorporate these adjustments into their plans unless otherwise noted herein.

The Design-Build Team shall design the project in accordance with the project permits and permit drawings included in this RFP for R-2635C, or otherwise pursue permit modifications. (Reference the Permit Modifications Project Special Provision.) Any variations to the design or construction methods reflected in the permits acquired by the NCTA shall require additional environmental agency coordination. All such work necessitated by these variations, including, but not limited to, public involvement, NEPA re-evaluation, agency coordination and permit modifications shall be the sole responsibility of the Design-Build Team. The NCTA shall not allow any contract time extensions or additional compensation associated with any coordination or approval processes resulting from these design or construction modifications.

The Design-Build Team shall conduct the Merger 01 4B and 4C meetings and prepare all documents necessary for the NCTA to acquire permits for the R-2635A and B segments of the project. No work shall begin on the R-2635A and B segments of the project until such permits are obtained. (Reference the Environmental Permits Scope of Work.)

Only open road tolling (inclusive of electronic toll collection and video toll collection technologies) will be utilized on the Western Wake Freeway. Any contract documents, oral explanations, instructions and / or supplied information that depicts or refers to cash collection and associated facilities / activities necessitated by cash collection shall be disregarded and excluded from the design and construction of this project.

The design and construction of this project shall accommodate one additional median lane in each direction along the project corridor to the extent that items such as conduit, lighting, gantries and bridges do not require relocation or replacement at the time that this future improvement is made. The Design-Build Team shall not waste any unsuitable materials in any areas of future widening.

Project Details

- As defined by the NCDOT's project descriptions, project R-2635 has been separated into three segments: R-2635A, B, and C. R-2635A begins at NC 55, near Old Smithfield Road, and extends westward to east of US 1, a distance of approximately 2.0 miles. R-2635B extends from east of US 1 to north of Olive Chapel Road, a distance of approximately 3.3 miles. R-2635C extends from north of Olive Chapel Road to NC 55, near Alston Avenue, a distance of approximately 7.3 miles. The Design-Build Team shall be responsible for the design and construction of all three segments as defined above.

- The Design-Build Team shall design and construct a six-lane divided facility with a 78-foot median. Unless noted otherwise in this RFP, the Design-Build Team shall design and construct the -L- Line, -Y- lines, ramps, loops, auxiliary lanes, collector-distributors, cul-de-sacs, and service roads providing access, widening and improvements as indicated on the February 8, 2007 Citizen Informational Workshop Map. At the north end of the project, the -L- median and the lane widths shall taper to match the existing widths based upon the current NCDOT guidelines and standards. The proposed new location facility shall be designed and constructed to meet a 70-mph design speed for a rolling urban freeway. The limits of -Y- Line and service road construction shall be of sufficient length to tie to existing facilities based upon the current NCDOT guidelines and standards.

- The three-lane facility known as Beaver Creek Commons that crosses the Western Wake Freeway is currently under construction in accordance with the plans developed by the Town of Apex and provided by the NCTA. At Beaver Creek Commons, the Design-Build Team shall remove the embankment material and construct bridges and approach slabs. The Design-Build Team shall be responsible for any work necessary in tying the bridges to the three-lane facility currently under construction, including the preparation of any encroachment agreement that may be necessary with the Town of Apex.

- At Morrisville Parkway, the Design-Build Team shall construct the bridge, and the approach slabs and shall construct the approach embankments including any cross pipes, to the extent necessary to construct the bridge and approach slabs. No work for the future interchange is required in this Contract; however the vertical clearance for the bridge shall accommodate the full typical section shown on the Town of Cary plans provided by the NCTA.

- At McCrimmon Parkway, the Design-Build Team shall construct bridges and approach slabs and tie to existing four-lane facility. Replace any portions of the facility that are damaged during bridge construction and resurface as specified herein.

- At Carpenter Fire Station Road (SR 1624), the Design-Build Team shall construct bridges, approach slabs, and roadway to tie to the existing four-lane facility. The Design-Build Team shall design and construct Carpenter Fire Station Road consistent with the plans developed by the Town of Cary and provided by the NCTA. Replace any portions of the facility that are damaged during bridge construction and resurface as specified herein.

- The February 8, 2007 Citizens Informational Workshop Map was designed using the **non-toll** traffic forecasts. The Design-Build Team shall use the 2030 Non-toll traffic analysis provided by NCTA, in the design of the facility.

- The existing bridge on Old Holly Springs - Apex Road (SR 1153) over US 1 shall not be removed as shown on the February 8, 2007 Citizens Informational Workshop Map.

- Along the -L- Line, the Design-Build Team shall design and construct interchanges at US 1, Old US 1 (SR 1101), US 64 and Green Level Road (SR 1615) as indicated on the February 8, 2007 Citizens Informational Workshop Map.

- At the south end of the project, the Design-Build Team shall design and construct an interchange with the NC 55 Bypass. The Design-Build Team shall be responsible for designing and constructing the Western Wake Freeway / NC 55 Bypass interchange in accordance with the February 8, 2007 Citizens Informational Workshop Map and preparing a functional design for the entire interchange.. The limits of -L- line construction at this interchange shall extend to 200 feet to the east of the back of gore for Loop C and Ramp A, respectively. Any embankment placed to satisfy these requirements shall include installing cross pipes.

- At the north end of the project, the Design-Build Team shall complete the Western Wake Freeway / NC 55 interchange, designing and constructing the mainline tie, as well as the completion of Ramps B and C and Loop D in accordance with the R-2000AA plans provided by the NCTA. The Design-Build Team shall design and construct an interchange at the intersection of Kelly Road (SR 1163) and US 64.

- Approximately 800 – 1000 feet south of the Old Smithfield Road intersection, the Design-Build Team shall construct a southbound median break and U-Turn bulb-out on NC 55 Bypass that accommodates the appropriate design vehicles exiting the Wake County Landfill. A left turn lane and channelization devices shall be provided in accordance with NCDOT Standards. The median U-Turn bulb-out shall not impact jurisdictional areas. NCDOT will be responsible for the NEPA consultation work associated with the median U-Turn bulb-out.

- The US 1 interchange design shall provide the direct connections shown on the February 8, 2007 Citizens Informational Workshop Map.

- The Design-Build Team shall provide a concrete monolithic island to separate opposing traffic along Old US 1, throughout the construction limits.

- Along the -L- Line, the Design-Build Team shall design and construct 14-foot outside shoulders, 2-foot of which shall be full depth paved shoulder and slipformed with the travel lane. An additional 10-foot of outside shoulder shall be paved in accordance with the Pavement Management Scope of Work Along the -L- Line, the Design-Build Team shall design and construct 14-foot inside shoulders, 12-foot of which shall be paved in accordance with the Pavement Management Scope of Work. The Design-Build Team shall provide milled rumble strips along the -L- Line inside and outside paved shoulders.

- The -L- line crown point shall be located on the lane line separating the inside and middle lanes.

- The Design-Build Team shall design and construct one-lane ramps that provide a minimum 16-foot lane width. The Design-Build Team shall design and construct two

lane ramps that provide minimum 12-foot lanes. All ramps shall have 12-foot inside shoulders, four-foot of which shall be full depth paved shoulders; and 14-foot outside shoulders, four-foot of which shall be full depth paved shoulders. The Design-Build Team shall design and construct one-lane loops that adhere to Exhibit 3-51, *Design Widths of Pavements for Turning Roadways,* shown in AASHTO's *A Policy on Geometric Design of Highways and Streets* (2004) - Case II / Condition B. All loops shall have 12-foot outside shoulders, four-foot of which shall be full depth paved shoulders; and 2'-6" curb and gutter along the inside edge of pavement, with a 14-foot berm. The minimum radius for all loops shall be 250'. The outside shoulder on one-lane ramps and loops containing toll gantries shall be the same width as above but shall include 10 ft. full depth paved shoulders.

- At the NC 55 Bypass, Green Level Road, and NC 55 interchanges, all ramps, abutment and turnback walls, end bents and structure horizontal and vertical clearances shall be designed and constructed to accommodate the extra width along the -L- line necessary for future loops at these interchanges. Vertical clearance shall be sufficient to accommodate the extra width along the -Y-_ lines necessary for future loops at these interchanges.

- The Design-Build Team shall design and construct all lane drops from the outside edge of pavement.

- Functional classifications that have a defined usable shoulder width shall have the appropriately wider overall shoulder width.

- Western Wake Freeway is a full control of access facility. The Design-Build Team shall bring to the NCTA's attention any deviations from the proposed control of access shown on the February 8, 2007 Citizens Informational Workshop Map or the Right-of-Way Plans for the R-2635C segment. The Design-Build Team shall delineate the control of access on their Right of Way Plans for the NCTA and Department's review and acceptance. The Design-Build Team shall be responsible for coordinating with, and obtaining approval from, the NCTA and NCDOT for the woven wire control of access fence placement. The Design-Build Team shall be responsible for installation of the woven wire control of access fence.

- The NCTA will conduct service road studies for the project and convey to the Design-Build Teams a functional design for any necessary service roads. If service roads are required, the Design-Build Team shall design and construct the service roads. The NCTA will be responsible for right of way costs due to these service roads.

- The Design-Build Team shall secure and maintain the construction site in proximity to the Kelly Glen, Scotts Mill, and Ashley Downs neighborhoods, as well as the Olive Chapel School, with orange safety fencing or another securing device approved by the NCTA prior to installation.

- The Design-Build Team may shift the alignment to avoid impacts to the American Tower's telecommunication's tower located at approximately Station 89+00 –L-, RT.

Otherwise, the Design-Build Team shall be responsible for all cost and time impacts associated with adjusting or relocating the tower.

- Concurrence Point 4A, Avoidance and Minimization, has been reached with the Environmental Agencies for the R-2635A and the R-2635B sections. Concurrence Point 4C, Permit Drawing Review, has been reached with the Environmental Agencies for the R-2635C section. Any variations in the proposed design and / or construction methods that nullify these Concurrence Points and / or require additional coordination with, or approvals from, the Environmental Agencies shall be the sole responsibility of the Design-Build Team (Reference the Environmental Permits Scope of Work). The NCTA shall not allow any contract time extensions or additional compensation associated with any coordination or approval process resulting from design and / or construction modifications.

- The Design-Build Team shall not impact, or increase impacts of, any cultural, historical, or otherwise protected landmark or topographic feature not delineated on the February 8, 2007 Citizens Informational Workshop Map. The Design-Build Team's design or construction shall not require right of way or easements from the aforementioned features unless shown on the February 8, 2007 Citizens Informational Workshop Map.

- The Design-Build Team shall not impact the Feltonsville Community Park's six-foot chain link fence that parallels Old Smithfield Road. The fence shall not be impacted and all construction shall occur outside the aforementioned fence.

- The Design-Build Team shall incorporate greenway ties and details into the roadway plans. (Reference the Greenway Scope of Work.)

- The Design-Build Team shall be responsible for the design and construction of the noise walls recommended for construction in the Final Design Noise Report entitled "Traffic Noise Report (June 2007)," including any geotechnical investigations necessary to design the foundations. (Reference the Structures Scope of Work.) The Design-Build Team shall be responsible for the wall envelope details. If the Design-Build Team revises the horizontal and / or vertical alignments such that greater noise impacts are possible on surrounding receptors, the Design-Build Team shall re-analyze and complete a revised noise report, if necessary, for NCTA and FHWA review and acceptance. The original Final Design Noise Report will be provided to the Design-Build Team to assist in their determination of anticipated additional noise impacts on current receptors due to a design change. If adjustments to, or addition of, noise walls are required as a result of design deviations, the Design-Build Team shall be responsible for all costs associated with the adjustments and / or additions, including, but not limited to, public involvement, geotechnical investigations, shaft and wall designs and construction.

- The Final Design Noise Report was prepared assuming 2:1 slopes. If the noise walls are re-located, the Design-Build Team shall revise the Final Design Noise Report accordingly. If needed to achieve 3:1 slopes, expressway gutter may be used along noise walls to avoid additional taking of right-of way.

- The Design-Build Team shall design and construct resurfacing grades for all roadways impacted by construction, excluding haul roads. At a minimum, the Design-Build Team shall resurface all lanes within the outermost construction limits of all proposed widening and construction, including any gaps along the facility where construction activities are not required. Additionally, resurfacing of existing facilities shall extend to the limits of any pavement markings which were obliterated during construction. This resurfacing shall be the full lane width and shall not be segmented, such as patching operations. The Design-Build Team shall design and construct grades that adhere to the design criteria and standards, providing all required pavement wedging. Reference the Pavement Management Scope of Work for resurfacing requirements.

- Unless noted otherwise elsewhere in this RFP, the maximum allowable cut and fill slopes shall be 3:1 (H:V) and 2:1 (H:V), respectively. The slopes in the interchange area shall follow the requirements set forth in *the Roadway Design Guidelines for Design-Build Projects* located on the NCDOT Design-Build website.

- The Design-Build Team shall note in the Technical Proposal any proposed deviations to the February 8, 2007 Citizens Informational Workshop Map or the R-2635C Right of Way Plans. The Design-Build Team shall be responsible for any activities, as deemed necessary by the NCTA, or the FHWA, resulting from any such deviations, including but not limited to, public involvement and NEPA re-evaluation. The NCTA shall not honor any requests for additional contract time or compensation for completion of the required activities resulting from any such deviations.

- The Design-Build Team shall inform the NCTA, in writing, of any proposed changes to the provided Right of Way Plans, or the Design-Build Team's Technical Proposal, preliminary design or previously reviewed submittals and obtain approval prior to incorporation.

- No design exceptions shall be allowed for the -L- line, including all ramps, loops, and collector-distributors. NCTA prefers not to have design exceptions for the -Y- Lines and service roads. If the Design-Build Team anticipates any design exceptions for the -Y- lines or service roads, they shall be clearly noted in the Technical Proposal. Prior to requesting / incorporating a design exception into the Final Plans, the Design-Build Team must obtain prior conceptual approval from NCTA and FHWA. If conceptual approval is obtained, the Design-Build Team shall be responsible for the development and approval of all design exceptions.

- The Design-Build Team shall submit Structure Recommendations and Design Criteria for NCTA and FHWA review and acceptance prior to submittal of the Preliminary Plans developed by the Design-Build Team. The Design-Build Team shall develop Structure Recommendations that adhere to the format noted in the March 25, 2003 and September 1, 2004 memos from Mr. Jay Bennett, PE, NCDOT State Roadway Design Engineer. The design speed for all roadways shall be the greater of the minimum design speed for the facility type or the anticipated / actual posted speed plus five-mph.

- All guardrail and cable guiderail placement shall be in accordance with the July 2006 NCDOT *Roadway Standard Drawings* and / or approved details in lieu of standards. The guardrail / guiderail design shall be submitted for review with the Preliminary Plans submittal. Continuous median guiderail is not required along the -L- line.

- Unless otherwise noted in this RFP, the Design-Build Team shall design and construct bridge rail offsets that are the greatest of (1) as indicated in the NCDOT *Roadway Design Manual*, (2) equal to the entire width of the approach roadway paved shoulders, or (3) equal to the width to accommodate the future sidewalk as required in the Structure Scope of Work. For long bridges that do not require future sidewalk accommodations, bridge rail offsets may be reduced from the aforementioned requirements (1) and (2) in accordance with the NCDOT *Roadway Design Manual*.

- The Design-Build Team shall be responsible for the evaluation of the algebraic difference in rates of cross slope (roll-over) between existing shoulders and roadways and the associated suitability for carrying traffic during construction, if necessary. In the event that the roll-over is found to be unacceptable for the proposed temporary traffic patterns, the Design-Build Team shall be responsible for providing cross slopes that meet design standards and eliminate roll-over concerns.

- Within the vehicle recovery area, the Design-Build Team shall design and construct single face concrete barrier in front of all retaining walls, all elements acting as a retaining wall and all noise walls that are subject to vehicular impact.

- The Design-Build Team shall coordinate and obtain written approval from NCTA and NCDOT prior to relocating any cemeteries.

General

- The design shall be in accordance with the 2004 AASHTO *A Policy on Geometric Design of Highways and Streets*, July 2006 *NCDOT Roadway Standard Drawings*, NCDOT 2002 *Roadway Design Manual, Roadway Design Policy and Procedure Manual, Roadway Design Guidelines for Design-Build Projects*, 2006 *North Carolina Standard Specifications for Roads and Structures*, the AASHTO *Roadside Design Guide 2002* and other pertinent NCTA guidelines references in this RFP.

- If the NCDOT *Roadway Design Manual*, the 2004 AASHTO *A Policy on Geometric Design of Highways and Streets*, the 2006 *Roadway Standard Drawings* and / or any other guidelines, standards or policies have desirable and / or minimum values, the Design-Build Team shall use the desirable values unless otherwise noted elsewhere in this RFP. Similarly, in case of conflicting design parameters in the various resources, the proposed design shall adhere to the most conservative values.

- A sag vertical curve low point shall not be located on any bridge or approach slab.

- The project shall follow the NCDOT-FHWA Oversight Agreement. This agreement will be provided.

- The Design-Build Team shall identify the need for any special roadway design details (i.e. any special drainage structures, rock embankment, rock plating, special guardrail, retaining walls, concrete barrier designs, etc.) and shall provide special design drawings. The NCTA or NCDOT may have special details available that can be provided to the Design-Build Team upon request. The Design-Build Team shall refer to and adhere to the list of details to be used in lieu of standards located at **www.ncdot.org/business/**

NCTA Information Supplied

- The NCTA will provide copies of the DEIS (Draft Environmental Impact Statement), FEIS (Final Environmental Impact Statement), Reevaluation of the EIS, ROD (Record of Decision), and the latest list of environmental commitments, municipal agreements and all pertinent approvals and correspondence. Unless noted otherwise elsewhere in this RFP, the Design-Build Team shall adhere to all commitments stated in the environmental documents.

- The NCTA will provide electronic surveys to the Design-Build Team. Any supplemental surveys, including but not limited to additional topography, existing and proposed roadway, structure sites, underground and overhead utilities, existing and proposed drainage and wetland delineation shall be the responsibility of the Design-Build Team to acquire and process. Known existing utilities have been located and will be included with the survey data. The Design-Build Team shall be responsible for confirming the location of the utilities and the type / size of the facilities. All supplemental SUE work shall be the responsibility of the Design-Build Team.

- The February 8, 2007 R-2635 Citizens Informational Workshop Map, Right-of-Way Plans for the R-2635C segment of the project, and preliminary plans for the R-2635A and B segments of the project will be provided. The Design-Build Team is cautioned that these plans and designs are provided solely to assist the Design-Build Team in the development of the project design. The Design-Build Team shall be fully and totally responsible for the accuracy and completeness of the project design, including, but not limited to, the use of the NCDOT design, the use of portions of the NCDOT design or modifications to the NCDOT design.

- The NCTA will provide the as-built plans for Project R-2000AA. The Design-Build Team shall tie the proposed horizontal and vertical alignments with the constructed NCDOT Project R-2000AA.

- The NCTA will provide final pavement designs for R-2635A, B, and C. The Design-Build Team shall be responsible for all temporary pavement designs. (Reference the Pavement Management Scope of Work)

- The NCTA will provide a Geotechnical Subsurface Investigation for R-2635A, B, and C. The Design-Build Team shall be responsible for any additional geotechnical information, all geotechnical recommendations, as well as supplemental structural and roadway investigations. (Reference the Geotechnical Engineering Scope of Work).

STRUCTURE SCOPE OF WORK (4-15-08)

Project Details

The Design-Build Team shall be responsible for the design and construction of all structures necessary to complete the project.

The Design-Build Team shall design and construct all bridges at the following locations:

- **Westbound Western Wake Freeway and NC 55 Bypass** – mainline and auxiliary lane along -L- and existing laneage and one outside lane in each direction along NC 55 Bypass for proposed Loop C and future Loop A.
- **Western Wake Freeway and Old Holly Springs-Apex Road (SR 1153)** – future four-lane divided facility along SR1153 with 23 ft. median and ten foot berms for future 5 ft. sidewalk.
- **Flyover AC and Western Wake Freeway at US 1** – dual lanes for Flyover AC and mainline and auxiliary lanes for Western Wake Freeway.
- **Western Wake Freeway and Flyover BD at US 1** – dual lanes for flyover and mainline and auxiliary lanes for Western Wake Freeway.
- **Flyover AC and US1** – dual lanes for flyover and existing lanes and collector-distributor along US1.
- **Western Wake Freeway and US 1** – mainline and auxiliary lanes along Western Wake Freeway and existing laneage, collector-distributor, and Loops A and D along US1.
- **Flyover BD at US 1** – dual lanes along flyover and existing laneage, collector-distributor, and Ramp C.
- **CSX Railroad and Western Wake Freeway** – mainline and Loops A and D along Western Wake Freeway.
- **Old US 1 and Western Wake Freeway** – mainline and Loops A and D along Western Wake Freeway and three lanes, monolithic island, 4 ft. paved shoulder approaches, and accommodate future 5 ft. sidewalk (on north side) along Old US1.
- **Apex-Barbecue Road (SR 1162) and Western Wake Freeway** – mainline lanes along Western Wake Freeway and three lanes and accommodate future 5 ft. sidewalk on both sides along SR 1162.
- **Dual Bridges over Beaver Creek** - Reference Greenway and Hydraulics Scopes of Work.
- **Olive Chapel Road (SR 1160) and Western Wake Freeway** – mainline lanes along Western Wake Freeway and three lanes with 5 ft. sidewalk on south side along SR 1160.
- **Western Wake Freeway and Beaver Creek Commons** – mainline lanes, collector-distributors, and Ramps B and C along Western Wake Freeway and three lanes with curb and gutter approaches, 5 ft. sidewalk on north side, and 10 ft. multi-use path on south side along Beaver Creek Commons.

- **US 64 and Western Wake Freeway** – three lanes in each direction along US64 and mainline laneage, loops, and collector-distributors along Western Wake Freeway.
- **Kelly Road (SR 1163) and US 64** – three lanes and accommodate future 5 ft. sidewalk on east side along SR1163 and existing/proposed laneage and auxiliary lanes along US 64.
- **Jenks Road (SR 1601) and Western Wake Freeway** – mainline laneage and Ramps A and D along Western Wake Freeway and three lane curb and gutter section with 5 ft. sidewalk on both sides along SR 1601.
- **Roberts Road (SR 1608) and Western Wake Freeway** – mainline laneage along Western Wake Freeway and two lanes and accommodate future 5 ft. sidewalk on north side along SR 1608.
- **Dual bridges over Jack Branch** - Reference Hydraulics Scope of Work.
- **Dual bridges over White Oak Creek** – Reference Greenway and Hydraulics Scopes of Work.
- **Green Level Road (SR 1615) and Western Wake Freeway** – mainline laneage along Western Wake Freeway and five-lanes and accommodate future 5 ft. sidewalk on north side and 6 ft. paved shoulder approaches along SR 1615.
- **Green Hope School Road (SR 1621) and Western Wake Freeway** – mainline laneage along Western Wake Freeway and two lanes and accommodate future 5 ft. sidewalk on south side along SR 1621.
- **Morrisville Parkway and Western Wake Freeway** – two lanes and accommodations for future 5 ft. sidewalk on both sides along Morrisville Parkway and mainline laneage along Western Wake Freeway.
- **Dual bridges on Western Wake Freeway over Panther Creek** – Reference Greenway and Hydraulics Scopes of Work.
- **Carpenter Fire Station Road (SR 1624) and Western Wake Freeway** – four lane divided facility with 5 ft. sidewalks on both sides along SR 1624 and mainline laneage along Western Wake Freeway.
- **McCrimmon Parkway and Western Wake Freeway** – four lane divided facility with 10 ft. multi-use path on south side and 5 ft. sidewalk on north side along McCrimmon Parkway and mainline laneage along Western Wake Freeway. Reference Greenway Scope of Work.
- **Dual bridges on Western Wake Freeway over Nancy Branch and Future East-West Collector** – mainline laneage and ramps along Western Wake Freeway and accommodate the future two lane curb and gutter section with a future 10 ft. berm on north side and a future 15 ft. berm on south side along future East-West Collector. Reference Greenway and Hydraulics Scopes of Work.

For bridges crossing over Western Wake Freeway, any interior bents in the median shall be located at the center of the median or placed to account for future lane widening.

An LRFR load rating chart will be required on the plans.

The Design-Build Team is responsible for wall envelopes, design, and construction of all retaining walls necessary to construct the project.

The Design-Build Team is responsible for all culverts and culvert extensions necessary to complete the project. The Design-Build Team shall adhere to all permit, FEMA, and hydraulic design criteria when designing culverts and culvert extensions.

The Design-Build Team shall be responsible for removal and disposal of all structures.

All bridge rails shall satisfy the appropriate NCHRP test level for that facility, Mandatory Aesthetic Treatments, and bicycle and pedestrian protection as appropriate for the route.

The Design-Build Team shall be responsible for the design and construction of all noise wall required by the Final Design Noise Report entitled Traffic Noise Report (June 2007), including any geotechnical investigations necessary to design the foundations. The Design-Build Team shall be responsible for the wall envelope details. Reference Roadway Scope of Work.

The noise wall locations are as follows:

- Scott Mills Subdivision
- Kelly Glen Subdivision
- Ashley Downs Subdivision
- Olive Chapel Elementary School

Railroad Bridge Design

Design-Build Team shall design and construct the railroad bridge in accordance with the criteria and guidelines listed in the Railroad Coordination Scope of Work.

The structure shall have a minimum clear width of 48 feet for CSX Transportation operations if the tracks are located on a tangent alignment at the bridge location. The minimum clear width dimension shall be increased in accordance with CSX Transportation and AREMA requirements if the proposed relocated track is on a curved alignment.

The centerline of the proposed underpass shall be located along the centerline of the proposed relocated track such that a future track may be placed on either side of the proposed relocated track at a distance of 15 feet center to center and an access road may be placed across the new underpass on the other side of the proposed relocated track. The requirement for future track and access road applies to the bridge only.

The average daily number of trains at this location, Milepost S-173.75, is ten (10). The maximum time table speed is 60 mph.

No exceptions will be made to the CSX guidelines or the AREMA requirements unless granted by CSX Transportation. Reference Railroad Coordination Scope of Work.

Aesthetics Design

Bridges, retaining walls, sound barrier walls and signs/gantries shall have Mandatory Aesthetic Treatments as required by the Aesthetics Design Scope of Work found elsewhere in this RFP.

Open Road Tolling Infrastructure

The Design-Build Team shall be responsible for the design and construction of the infrastructure required to support the toll collection system. Reference the Open Road Tolling (ORT) Infrastructure Scope of Work found elsewhere in this RFP.

General

Design shall be in accordance with the latest edition of AASHTO *LRFD Bridge Design Specifications*, NCDOT Structure Design Manual (including policy memos), and NCDOT Bridge Policy Manual. Construction and materials shall be in accordance with the current NCDOT *2006 Standard Specifications for Roads and Structures*, NCDOT Structure Design Unit Project Special Provisions, and NCDOT Structure Design Unit Standard Drawings.

Bridge geometry (width, length, skew, span arrangement, typical section, grade, alignment, etc.) shall match approved Bridge Survey Reports, Roadway Plans and Structure Recommendations. Bridges shall meet all hydraulic design requirements for drainage.

The Design-Build Team's primary bridge design firm shall be on the NCDOT Highway Design Branch's list of firms qualified for structure design and maintain an office in North Carolina.

Alternate designs, details, or construction practices (such as those employed by other States, but not standard practice in North Carolina) are subject to NCTA and NCDOT review and shall be evaluated on a case by case basis.

The following will not be allowed on the project:

- Cored slab or precast box beams
- Monotube sign support structures
- Casting of conduit in the bridge decks
- Casting of conduit in outside railing unless otherwise required by the Lighting Scope of Work
- Attachment of sign structures to bridges
- Empirical deck design method.
- Prefabricated arch culverts and aluminum box culverts
- Fracture critical structures

Additional Falsework Requirements

Capacity of overhang falsework hangers placed at the edge of the thin top flange concrete girders (such as bulb tee girders) is limited to 75% of the manufacturer's safe working load. Use of Meadow Burke HF-42 and HF-43 hangers is not allowed.

When using bridge deck slab overhang falsework systems that transmit torsion to the exterior girders bracing will be required. Bracing shall limit the magnitude of torsional stresses (concrete girders) or lateral flange bending (steel girders) in the exterior girders caused by falsework system loads and limit the magnitude of stresses in the component elements, welds, or connections.

The sizing spacing and details of the bracing elements shall be sufficient to meet the design requirements stated below. Design calculations and working drawings submitted for review should consider the horizontal force effects of the falsework on the girder and on the bracing elements themselves.

For concrete girders, torsional stresses in girders resulting from falsework and other dead loads shall not exceed one quarter of the cracking torque. Torsional stresses due to all dead loads and live loads shall not exceed one half of the cracking torque. Cracking torque of prestressed concrete girders shall be computed in accordance with ACI 318-02, Section 11.6.1. For steel girders, lateral flange bending stresses shall not exceed 2000 psi.

Bracing shall be installed prior to any application of loads from screed equipment or work platform bridges. Bracing shall be removed after the deck is cured.

PAVEMENT MANAGEMENT SCOPE OF WORK (04-15-08)

The pavement design for the mainline shall consist of the following:

13.5" doweled jointed concrete with 15' uniform joint spacing
3.0" B25.0B
1.25" SF9.5A
Subgrade Stabilization

The pavement design for TOLLCD1 and TOLLCD2 shall consist of the following:

10" doweled jointed concrete with 15' uniform joint spacing
3.0" B25.0B
1.25" SF9.5A
Subgrade Stabilization

The mainline outside lane shall be constructed 14 ft. in width, 2 ft. of which will be outside shoulder with dowel bars and shall have the same superelevation as the outside travel lane. The 14 ft. outside lane pour is not required for acceleration, deceleration, and auxiliary lanes. The 14 ft. pour is also not required within the gore, except where the taper width is 2 ft. or less.

Three options are provided for the mainline shoulders as shown below. The option chosen by the Design-Build Team for the shoulders shall be consistent throughout the project and shall be noted in the Technical Proposal. Both outside and inside shoulders shall use the same option.

Option 1: 3" SF9.5A, S9.5B or S9.5C
4" I19.0C
6.5" B25.0C

Option 2: A minimum thickness of 11" jointed concrete, without dowels, with a joint spacing matching the adjacent mainline pavement. This option shall be anchored to the mainline pavement with tie bars.

Option 3: 8" roller-compacted concrete (RCC) and a minimum thickness of 7.25" of ABC. The 8" roller-compacted concrete shall have a joint matching every second joint of the adjacent travel lane pavement.

If the Design-Build Team elects Option 3 for the shoulders, then utilize personnel or a subcontractor that has a minimum 5 years experience in placing RCC and has performed a minimum of 12 lane miles of RCC shoulder construction on an interstate highway project(s) with quality results and smooth texture appearance. The DBT shall clearly detail the qualifications of the personnel or subcontractor proposed for RCC in their Technical Proposal, along with examples and quality results of the interstate RCC shoulder construction previously performed by such personnel or subcontractor. In addition, a RCC industry representative, with

specific expertise in RCC highway shoulder application, shall be on site during placement operations and shall attest to the quality of the product and smoothness.

Subgrade stabilization shall be to a minimum depth of 8 inches for lime and 7 inches for cement. The type of subgrade stabilization and amount of stabilizing agent shall be determined in accordance with the Cement and Lime Stabilization of Subgrade Soils Scope of Work.

Other pavement designs for this project are listed in the table below:

LINE	Surface	Intermediate	Base	ABC	Stab.
EY2 (NC 55 Bypass)	3.0” S9.5C	3.0” I19.0C	8.0” B25.0C	-----	No
Y2LPC @ EY2	3.0” S9.5B	4.0” I19.0B	-----	10.0”	Yes
Y2RPA @ EY2					
Y2RPD @ EY2					
Y5 (Old Smithfield Road)	3.0” S9.5B	4.0” I19.0B	4.0” B25.0B	-----	No
Y4 (US 1)	3.0” S9.5C	3.0” I19.0C	9.0” B25.0C	10.0”	No
CDR	3.0” S9.5C	3.0” I19.0C	5.5” B25.0C	10.0”	No
Y4RPA	3.0” S9.5C	3.0” I19.0C	3.0” B25.0C	10.0”	Yes
FLYOVERAC @ Y4					
FLYOVERBD @ Y4					
Y4RPB	3.0” S9.5B	3.0” I19.0B	-----	10.0”	Yes
Y4RPC					
Y4RPD					
Y4LPA					
Y4LPD					
Y5 (SR 1101, Old US 1)	3.0” S9.5B	3.0” I19.0B	-----	10.0”	No
Y5RPA	3.0” S9.5B	4.0” I19.0B	-----	8.0”	Yes
Y5LPA					
Y5RPD					
Y5LPD					
Y17 (SR 1163)	3.0” S9.5B	2.5” I19.0B	-----	8.0”	No
Y6 (SR 1162)					
Y7 (SR 1160)	3.0” S9.5B	4.0” I19.0B	-----	10.0”	No
Y8 (US 64)	3.0” S9.5C	4.0” I19.0C	8.5” B25.0C	10.0”	No
RP1A @ Y8	3.0” S9.5C	4.0” I19.0C	4.0” B25.0C	10.0”	Yes
LP1A @ Y8					
RP1B @ Y8					
LP1B @ Y8					
RP1C @ Y8					
LP1C @ Y8					
RP1D @ Y8					
LP1D @ Y8					

LINE	Surface	Intermediate	Base	ABC	Stab.
Y18 (SR 1163, Kelly Rd.)	3.0” S9.5B	4.0” I19.0B	3.0” B25.0B	8.0”	No
RPY18A					
RPY18B					
Y11 (SR 1611)	3.0” S9.5B	4.0” I19.0B	-----	8.0”	No
Y9 (SR 1600)					
Y13 (SR 1608)					
Y14 (SR 1615)	3.0” S9.5B	3.0” I19.0B	3.0” B25.0B	8.0”	No
RP2A @ Y14	3.0” S9.5B	4.0” I19.0B	-----	8.0”	Yes
RP2B @ Y14					
RP2C @ Y14					
RP2D @ Y14					
Y15 (SR 1621)	3.0” S9.5B	2.5” I19.0B	-----	8.0”	No
Y16 (SR 1624)	3.0” S9.5B	4.0” I19.0B	-----	10.0”	No
RP3B @ NC 55	3.0” S9.5B	3.0” I19.0B	4.0” B25.0B	10.0”	No
RP3C @ NC 55					
DR1	-----	-----	-----	8.0”	No

For the roadways listed in the above table, the Design-Build Team shall have the option of utilizing B25.0 in lieu of ABC or vice versa. The B25.0 mix level shall be consistent with the other mix layers. The replacement ratio is ½” of B25.0 per 1” of ABC. If this option is chosen, the Design-Build Team shall provide consistency in the design for the entire -Y- line, ramp, or loop constructed, exclusive of narrow widening and irregular areas. The maximum and minimum HMA lift thicknesses detailed in the NCDOT HMA QMS Manual and a maximum ABC thickness of 10 inches shall apply.

The Design-Build Team shall resurface the existing Y-lines pavement with a minimum pavement depth that equals the full thickness of surface course as provided in the table above (Reference Roadway Scope of Work).

Where guardrail is installed less than 6 feet from the edge of the paved shoulder, the Design-Build Team shall pave from the edge of the proposed paved shoulder to the face of guardrail with 6” of ABC and at least one lift of SF9.5A, S9.5B, or S9.5C surface course. The ABC pavement design shall require prime coat at the normal application rate.

The mainline pavement design shall extend to the back of the gore (12-foot width) at all ramps and loops.

In areas where the existing paved shoulder is proposed to be incorporated into a permanent travel lane, the Design-Build Team shall be responsible for evaluating the existing paved shoulder regarding its suitability for carrying the projected traffic volumes. In the event that the existing paved shoulder is found to be inadequate, the Design-Build Team shall be responsible for removing the existing paved shoulder. The Design-Build Team shall submit their evaluation and

proposed use of existing paved shoulders to the NCTA Chief Engineer for review and acceptance or rejection.

The Design-Build Team shall be responsible for design of continuous shoulder drains and outlets for the mainline. The shoulder drain design and outlet locations are to be submitted to the NCTA Chief Engineer for review and acceptance. The shoulder drain design shall be in accordance with Standard Drawing 816.02 of the Roadway Standard Drawings, NCDOT. Shoulder drains shall not be located under concrete.

All driveways, up to the radius point, shall be constructed with the full-depth pavement design of the intersecting roadway. The entire impacted length of all non-concrete driveways with a 10% or steeper grade shall be constructed with 1.5" S9.5B and 8" incidental stone. Unless otherwise noted above, the Design-Build Team shall adhere to the following for all driveway construction:

- For existing gravel and soil driveways, use 8" Incidental Stone
- For existing asphalt driveways, use 1.5" S9.5B and 8" Incidental Stone
- For existing concrete driveways, use 6" jointed concrete reinforced with woven wire mesh

The Design-Build Team shall be responsible for the design of all temporary pavements and for the evaluation of existing shoulders and roadways regarding their suitability for carrying traffic during construction, if necessary. In the event that the existing shoulders and roadways are found to be inadequate for the proposed temporary traffic volumes and durations, the Design-Build Team shall be responsible for upgrading the pavement to an acceptable level. Temporary pavements shall be designed in accordance with the most recent version of the North Carolina DOT Pavement Design Procedure. Temporary pavement designs are to be submitted for review and comment using the contract submittal process. The expected duration for traffic on temporary pavement must be included as part of the submittal. (Reference the Roadway Scope of Work)

The rate of application and the maximum and minimum thickness per application and layer shall be in accordance with the NCDOT Roadway Design Manual.

When resurfacing grades ties to existing curb, bridges and pavement, perform incidental milling such that the new pavement ties flush with the existing features while retaining the proposed resurfacing pavement thickness. Do not reduce the design surface layer pavement thickness when tying to such features. Perform incidental milling for a minimum distance of 25 feet at bridges and existing pavement ties, and 6 feet at curb sections. Milling shall not be performed prior to 72 hours before placement of the asphalt surface layer.

Reference the Open Road Tolling (ORT) Infrastructure SOW for the pavement requirements under the ETC gantries at the mainline and other locations.

HYDRAULICS SCOPE OF WORK (04-09-08)

Project Details

The Design-Build Team shall:

- Hold a pre-design meeting with the NCTA upon acceptance of the Preliminary Roadway Plans.
- Design and install all Storm Drainage systems within the project limits.
- Provide Stormwater Management Plan using NCDOT Best Management Practices.
- Unless otherwise stated herein, provide Culvert and Bridge Survey Reports for structures in accordance with the guidelines in the General section below.
- NCTA will provide the sealed Culvert and Bridge Survey Reports on R-2635C as listed below. In the event that the Design-Build Team elects not to adhere to the design depicted in the provided reports, submit revised reports for review and acceptance. The Design-Build Team shall be responsible for verifying and finalizing all culvert and bridge survey reports.
- Provide bridge drainage features that prevent direct discharge into surface water. Direct discharge into wetlands will be determined through the Merger 01 4B meeting.
- Conduct the Merger 01 4B and 4C meetings and prepare all documents necessary for the NCTA to submit permit applications for R-2635A and B. Reference the Environmental Permits Scope of Work. Provide any necessary permit modification drawings and calculations for R2635C. (Reference the Permit Modifications Project Special Provision).
- Analyze existing culverts and cross pipes impacted or affected by the project and within existing right of way. Replace any deficient (structurally and / or hydraulically) pipes and / or culverts.
- Prepare Pre- and Post-Construction Analysis for increases in discharge and take appropriate action in accordance with the guidelines in the General section below to make sure additional drainage is adequately handled.
- Allow no work in areas in FEMA floodplains until an approved CLOMR or No Impact Certification is obtained for that area. The NCTA will provide the CLOMR or No-Impact documentation for those floodplains listed below. If the Design-Build Team elects to revise the design at these locations, then the Design-Build Team shall be responsible for the revised FEMA compliance documents. Prepare CLOMR package for all other regulated stream crossing not provided for NCTA submittal. Prepare CLOMR packages for all crossings that deviate in any way from those provided for R-2635C for NCTA submittal.
- Prepare LOMR packages for all regulated streams impacted by the design for NCTA's submittal to FEMA after project is completed or after area is built out.
- The Design-Build Team shall be responsible for the cost of all fees associated with FEMA compliance work.

- The Design-Build Team shall be responsible for the design and construction of the natural stream design on the R-2635C segment of the project. The Design-Build Team is not responsible for the monitoring of this stream.
- Install all proposed pipes with a minimum 15" diameter throughout the project. If existing pipes are structurally or hydraulically inadequate, the Design-Build Team shall replace these pipes with a minimum 15" diameter or larger pipe, according the Design-Build Team's design and analysis.
- Provide rock toe protection with filter fabric keyed into the toe of any fill slopes in contact with wetland areas.

General

At minimum, all design shall be in accordance with criteria provided in the North Carolina Division of Highways "Guidelines for Drainage Studies and Hydraulics Design-1999", the addendum "Handbook of Design for Highway Drainage Studies-1973", North Carolina Department of Transportation "Best Management Practices for Construction and Maintenance Activities–2003" and the North Carolina Division of Highways Hydraulics Unit web-site:

http://www.ncdot.org/doh/preconstruct/highway/hydro/

For pipes up to 48" in diameter and not located under travelways or curb and gutter, Type S or Type D, HDPE pipe meeting the requirements of AASHTO M294 or Aluminized Corrugated Steel Pipe, Type IR meeting the requirements of Article 1032-3(A)-7 of the NCDOT Standard Specifications may be used instead of Reinforced Concrete Pipe, Class III. Installation of both alternate pipe materials shall conform to the requirements of Section 300 of the Standard Specifications for Method A, except that the minimum cover shall be at least 12 inches.

Information Supplied:

- Individual 404 Permit and Section 401 Certificate for R-2635C.
- Bridge Survey Reports for Jack Branch at Station 438+00 -L-, White Oak Creek at Station 456+12.5 -L-, Panther Creek at Station 595+00 -L-, and Nancy Branch at Sta. 672+59.5 -L-.
- Culvert Survey Reports for Trib. to Reedy Creek at Station 316+85 -L-, Trib. to Bachelor Branch at Station 489+81 -L-, Bachelor Branch at Station 515+62 -L-, Trib. to Bachelor Branch at Station 520+93 -L -, Morris Branch at Station 635+22 -L-, and Reedy Branch at Station 42+05.10 -Y8-.
- CLOMRs for Bridge at Jack Branch at Station 438+00 -L-, Culvert at Bachelor Branch at Station 515+62 -L-, Bridge at Panther Creek at Station 595+00 -L-, and Culvert at Morris Branch at Station 635+22 -L-.
- No Rise documentation for Bridge at White Oak Creek at Sta. 456+12.5 -L-.
- Natural Channel Design package on R-2635C titled Mitigation Plan and dated May 2007. In the event that the Design-Build Team elects not to adhere to the design depicted in the provided package, submit revised reports for review and acceptance by NCTA and NCDOT.

GEOTECHNICAL ENGINEERING SCOPE OF WORK (04-15-08)

I. GENERAL:

Obtain the services of a firm prequalified for geotechnical work by the NCDOT. The prequalified geotechnical firm shall prepare foundation design recommendation reports for use in designing structure foundations, roadway foundations, building foundations, retaining walls, sound barrier foundations, overhead sign structure foundations, overhead sign structures, overhead gantries and temporary structures.

Prior to any geotechnical design submittal, the foundation design recommendation reports shall be sealed by a Professional Engineer registered in the State of North Carolina who has completed a minimum of three geotechnical design projects of scope and complexity similar to that anticipated for this project using the load and resistance factor design (LRFD) method and in accordance with the latest edition of the AASHTO LRFD Bridge Design Specifications. If the Engineer of Record cannot demonstrate the aforementioned LRFD experience, then the design must undergo a peer review by an individual with such experience. In such case, the reviewer must be a registered Professional Engineer, but not necessarily in the State of North Carolina. Prior to the first geotechnical design submittal, the Design-Build Team shall provide a letter to the NCTA that documents the reviewer's LRFD experience for review and acceptance. Furthermore, with each geotechnical design submittal, the reviewer shall provide a sealed letter stating that he / she has carefully reviewed and approved the specific submittal details.

The prequalified geotechnical firm shall also determine if additional subsurface information, other than that required and noted elsewhere in the Contract Documents, is required based upon the subsurface information provided by NCTA and / or NCDOT and the final roadway and structure designs. If a determination is made that additional subsurface information is required; the Design-Build Team shall perform all additional subsurface investigation and laboratory testing in accordance with the current NCDOT *Geotechnical Unit Guidelines and Procedure Manual*.

The Design-Build Team shall be responsible for obtaining the borings noted herein for all bents where subsurface information is not sufficient or is warranted by variability in the geology. A minimum of 2 standard penetration test (SPT) / rock core borings shall be required within 50 feet of each bent for all bridges unless the prequalified geotechnical firm submits documented justification that the subsurface investigation provided by the NCTA and / or NCDOT is adequate for design purposes and the justification is acceptable to the NCTA. All borings shall be deep enough to show a complete soil and rock profile to the depth of the foundation-supporting layer.

The maximum spacing between borings for retaining walls shall be 200 feet, with a minimum of two borings; one at each end of the wall. Drill borings for retaining walls to twice the maximum height of the wall. Boring depths for sound barriers shall be equal to the maximum height of the wall or to SPT refusal.

The Design-Build Team is permitted to design bridges on this project using software that accounts for the structural effects of soil / pier interaction.

Diabase dikes may exist on the Triangle Expressway project corridor. Based on NCTA geotechnical investigations, diabase dikes were encountered at the following boring locations:

Western Wake Freeway	R-2635B	Station 248+81 -L- (22 ft. Left)
Triangle Parkway	U-4763B	Station 219+35 -L- (36 ft. Left)
Triangle Parkway	U-4763B	Station 220+17 -L- (34 ft. Left)
Triangle Parkway	U-4763B	Station 243+21 -L- (7 ft. Right)

The Design-Build Team may need to conduct further subsurface explorations to determine the limits of the diabase dikes for their design recommendations and construction procedures.

II. TRIASSIC ROCK:

This project is located within the Triassic Basin consisting of sandstone, siltstone, and mudstone. These sedimentary rocks were formed during the Triassic Age and consist of irregularly bedded sandstone, siltstone, and mudstone; partly micaceous and feldspathic in composition. Triassic soils have high slaking potential and degrade when exposed to air and / or water. Therefore, the Design-Build Team and the prequalified geotechnical firm, shall take the nature of this material into account and incorporate that into any design and construction recommendations. The Design-Build Team shall be aware that the slopes consisting of Triassic material, particular those facing the south/southeast direction have had an increased potential for slope failure. The Design-Build Team shall take this into account when designing and constructing slopes

End bents supported on spread footings are not allowed in Triassic material. If the Design-Build Team elects to use spread footings for interior bents, gantries, or sign supports then the Design-Build Team shall submit an excavation plan to the NCTA that outlines the construction sequence, extent of excavation, methods of protecting the Triassic rock from degradation, and that minimizes the duration of any exposure of Triassic rock. The Design-Build Team shall remove all degraded material prior to the spread footing construction.

Attention shall be directed to placement and compaction adjacent to and over pipe crossings. The Design-Build Team shall be responsible for any damage to such pipes.

Embankment Construction Using Degradable Rock

Degradable rock is defined as hard rock material which exhibits high slaking characteristics when exposed to air and water. This type material is anticipated on this project and is comprised of Triassic mudstone and siltstone. Place all excavated

degradable rock and all mixtures of degradable rock and soil in accordance with these provisions, unless otherwise approved.

Place embankments constructed of degradable rock in 12 inch maximum lifts. Place each lift by blading and dozing in a manner to minimize voids, pockets and bridging. Use a dozer to spread the material that is equivalent to or larger in size than a Caterpillar D-8. Provide each lift with a minimum of three (3) coverages with a static pad foot roller (minimum weight of 45,000 lbs and two (2) coverages with a vibratory pad foot roller (minimum centrifugal force per drum of 50,000 lbs). Otherwise, submit and demonstrate placement and compactive efforts that minimize voids, pockets and bridge to equivalent level as above.

If the material is dry, add water to facilitate breakage of the rocks and compaction. Uniformly mix the added water for the entire depth of the lift by blading, disking, or other approved methods. Make sure that the amount of water added is sufficient to achieve optimum moisture of the particle size material.

The Engineer may modify the sequence or the number of coverages with either roller as deemed necessary to insure satisfactory breakage and compaction of the material.

Degradable rock or degradable rock and soil mixture shall be capped with a minimum 24 inches of suitable material meeting the requirements of NCDOT *2006 Standard Specifications* Article 1018-2A and material outside the pavement limits shall be capable of sustaining vegetative growth.

Wasting of degradable rock within the right of way, and not in areas of future landscaping, may be permitted provided that the placement and compactive efforts detailed herein and conditions of Article 225-3 of the NCDOT *2006 Standard Specifications* are met.

III. DESCRIPTION OF WORK:

The Design-Build Team shall design foundations, embankments, slopes, retaining walls, sound barrier foundations and temporary structures in accordance with the most recent edition of the AASHTO LRFD Bridge Design Specifications, NCDOT Structure Design Manual, NCDOT *Roadway Design Manual* and the NCDOT Geotechnical Engineering Unit *Roadway and Structure Foundation Guidelines*, unless otherwise noted in this scope of work.

A. Structure Foundations

Key in spread footings of structures crossing streams a minimum of full depth below the 100-year design scour elevation and provide scour protection in accordance with scour protection detail in the NCDOT *Structure Design Manual*.

Obtain acceptance from the NCTA for any longitudinally battered piles for pile bents of structures crossing streams or wetlands. Permanent steel casings shall be required for drilled piers that are constructed in six inches or more of water. Permanent casings shall be required where drilled piers are constructed on stream banks that are subject to flooding.

When the weathered rock or rock elevation is below the 100-year hydraulic scour elevation, the 100-year and 500-year design scour elevations are equal to the 100-year and 500-year hydraulic scour elevations from the structure survey report accepted by the NCTA. When the weathered rock or rock elevation is above the 100-year hydraulic scour elevation, the 100-year design scour elevation may be considered equal to the top of the weathered rock or rock elevation, whichever is higher, and the 500-year design scour elevation may be set two feet below the 100-year design scour elevation.

End bent fill slopes up to 35 feet in height (defined as the difference between grade point elevation and finished grade at toe of slope) shall be 1.5:1 (H:V) or flatter. End bent fill slopes with heights greater than 35 feet or end bent cut slopes shall be 2:1 or flatter. Extend end bent slope protection from the toe of the slope to the top of berm and to 1.75:1 (H:V) slope for 1.5:1 fill slopes or to the limits of the superstructure for cut slopes and for 2:1 or flatter fill slopes.

Analyze drilled pier and pile bent foundations using either LPile or FB-Pier. Design drilled piers and vertical piles with a sufficient embedment in soil and/or rock to achieve “fixity”.

B. Roadway Foundations

Design all unreinforced fill slopes for a slope of 2:1 (H:V) or flatter except bridge end bent slopes (see Section A). In order to eliminate “sliver fills” that are difficult to tie into existing fill slopes, the Design-Build Team can use a slightly steeper slope at the top of fill, provided the design meets the minimum stability requirement for the new and overall slope. Permanent soil stabilization measures may be required.

All cut slopes shall be 3:1 (H:V) or flatter, unless the slopes are designed with adequate reinforcement to provide the required stability. Submit detailed design calculations and slope stability analysis for any reinforced cut slopes steeper than 3:1 (H:V) and fill slopes steeper than 2:1 (H:V) to the NCTA for review and acceptance prior to construction.

Design sound barrier foundations in accordance with current allowable stress design AASHTO *Guide Specifications for Structural Design of Sound Barriers*. A minimum factor of safety of 1.5 shall be required for shaft embedment depths.

Design and construct bridge approach embankments such that no more than 2" of settlement shall occur after the waiting periods end. Soil improvement techniques

to mitigate long term settlement problems or to transfer the embankment load to a deeper bearing stratum are allowed. Soil improvement techniques shall follow the current industry standard practices and the guidelines of *Ground Improvement Methods FHWA publication NHI-04-001 or Geosynthetic Design and Construction Guidelines FHWA-HI-95-038.*

Embankment settlement monitoring shall be required when a waiting period of more than one month is recommended in the foundation design recommendation reports. Use an appropriate method to monitor settlement across the length of the embankment (from toe to toe) such as settlement gauges, surveyed stakes on finished subgrade or other methods but submit documentation describing the method and procedures to the NCTA for review and acceptance prior to use.

Reinforced bridge approach fills in accordance with the NCDOT standard shall be required for end bents on all bridges.

C. Permanent Retaining Wall Structures

Extensible reinforcement may be allowed for any permanent retaining walls in non-critical wall structures. Modular block walls shall not be allowed for critical wall structures. Critical wall structures include walls supporting or adjacent to interstate highways, bridge abutments, wing walls and walls over 25 feet in height.

Design and construct permanent retaining walls, with the exception of gravity walls, in accordance with the applicable NCDOT *Project Special Provisions,* which can be provided upon request by the Design-Build Team. For each retaining wall, with the exception of gravity walls, submit a wall layout and design. The wall layout submittal shall include the following:

- Wall envelope with top of wall, bottom of wall, existing ground and finished grade elevations at incremental stations.
- Wall alignment with stations and offsets.
- Typical sections showing top and bottom of wall, drainage, embedment, slopes, barriers, fences, etc.
- Calculations for bearing capacity, global stability and settlement.
- Details of conflicts with utilities and drainage structures.
- Roadway plan sheets showing the wall (half size).
- Roadway cross sections showing the wall (half size).
- Traffic control plans showing the wall (half size).

Gravity walls shall be designed and constructed in accordance with the NCDOT Structure Standard Drawings and the NCDOT *2006 Standard Specifications*. Gravity walls do not require any submittals and shall be identified in the roadway foundation design recommendation report. Cast-in-place cantilever walls shall be designed and constructed in accordance with the NCDOT *2006 Standard Specifications.*

Locate retaining walls at toe of slopes unless restricted by right of way limits. The Design-Build Team shall submit global stability calculations for slopes at retaining walls and obtain acceptance from the NCTA prior to construction. Any slopes behind walls shall be 2:1 (H:V) or flatter.

Drainage over the top of retaining walls shall not be allowed. Sags in the top of walls are not permissible. Direct runoff above and below walls away from walls, if possible, or collect runoff at the walls and transmit it away. Curb and gutter or cast-in-place single faced barrier with paving up to the wall shall be required when runoff can not be directed away from the back or front of the wall. A paved concrete ditch with a minimum depth of six inches shall be required at the top of walls when slopes steeper than 6:1 (H:V) intersect the back of walls.

Precast or cast-in-place coping shall be required for walls without a cast-in-place face with the exception of when a barrier is integrated into the top of the wall. Extend coping or cast-in-place face a minimum of six inches above where the finished or existing grade intersects the back of the wall. A fence shall be required on top of the facing, coping or barrier or immediately behind the wall, if there is no slope behind the wall. Submit fence type and details for NCTA review and acceptance. (Reference Aesthetic Design Scope of Work)

When using abutment retaining walls, design and construct the end bent and the wall independent of each other. When using abutment retaining walls, the end bent foundation shall be designed and constructed with one of the following deep foundations: (1) a single row of plumb piles with brace piles battered toward the wall, (2) a single row of plumb piles with MSE reinforcement strapped to the back of the cap, (3) a double row of plumb piles or (4) drilled piers. If fill is required around piles or drilled piers, install foundations before placing any fill. Wing walls independent of abutment retaining walls shall be required unless accepted otherwise by the NCTA. Do not consider lateral support from any fill placed around drilled piers behind abutment retaining walls when analyzing end bent stability. All pile foundations for end bents with abutment retaining walls shall penetrate 10 feet into natural ground. For bearing piles behind such retaining walls, the penetration can be reduced to 5 feet below the bottom of the wall provided the Design-Build Team analyzes and determines that the vertical piles are “fixed” in natural ground such that the decrease in pile length shall not significantly increase the top deflection under lateral loading. This analysis(es) shall be submitted to the NCTA for review and acceptance prior to construction.

D. Temporary Structures

Design temporary retaining structures, which include earth retaining structures and cofferdams, in accordance with current allowable stress design AASHTO *Guide Design Specifications for Bridge Temporary Works* and the NCDOT *Temporary Shoring* Special Provision. The only submittal required to use the standard sheeting design is the “Standard Shoring Selection Form”.

Design and construct temporary retaining walls in accordance with the applicable NCDOT *Project Special Provision* available upon request by the Design-Build Team. Traffic Control barrier on top of walls shall be in accordance with the NCDOT Work Zone Traffic Control Unit details available upon request by the Design-Build Team. If anchored barrier is required, then anchor the barrier in accordance with NCDOT *2006 Roadway Standard Drawing* Detail No. 1170.01.

IV. CONSTRUCTION REQUIREMENTS:

All construction and materials shall be in accordance with the NCDOT *2006 Standard Specifications* and current NCDOT *Project Special Provisions* unless otherwise stated in this scope of work. The Design-Build Team shall be responsible for investigating, proposing and incorporating remedial measures for any construction problems related to foundations, retaining walls, subgrades, settlement, slopes, and construction vibrations. The NCTA shall review and accept these proposals.

The Design-Build Team shall be responsible for any damage or claim caused by construction, including damage caused by vibration (see Article 107-15 NCDOT *2006 Standard Specifications for Roads and Structures*). The Design-Build Team shall reference the Rock Blasting Project Special Provision found elsewhere in this RFP.

Wet cuts may require additional design and construction procedures other than the use of underdrains.

The prequalified geotechnical firm that prepared the foundation designs shall review the embankment settlement monitoring data a minimum of once a month and issue a letter prior to releasing the embankment from the waiting period. Waiting periods may not be ended until less than 0.10 inches of settlement is measured over a period of four weeks. Submit the settlement monitoring data to the NCTA prior to issuing the release letter.

The prequalified geotechnical firm that prepared the foundation designs shall review and approve all pile driving hammers and drilled pier construction sequences. The NCTA shall review these approvals prior to beginning construction.

Perform hammer approvals with GRLWEAP Version 2002 or later and in accordance with the NCDOT *2006 Standard Specifications*. Provide pile driving inspection charts or tables for all approved pile hammers.

Perform Pile Driving Analyzer (PDA) testing to develop pile driving inspection charts or tables. Provide PDA testing, and pile driving inspection charts or tables by a NCDOT pre-approved company. Meet the guidelines for NCDOT PDA reports from the Geotechnical Engineering Testing Contract for PDA test reports. To obtain a list of pre-approved Geotechnical Engineering Testing Contract companies to perform PDA testing and guidelines for PDA test report, contact NCTA. PDA testing may be performed by a technician, but PDA testing must be overseen and the reports sealed by a Professional Engineer registered in the State of North Carolina. Submit a complete PDA report sealed

by the professional engineer who performed the test to the foundation design firm. The foundation design firm shall develop pile driving inspection charts or tables for acceptance by the NCTA prior to pile installation.

For each permanent bridge that includes driven pile bents or driven pile footings, perform a minimum of one (1) PDA test (dual bridges are counted as one structure) for each pile size, pile type (material or shape) and pile driving hammer combination. If the bridge length with driven pile foundation is longer than 400 feet, perform additional PDA test at every 400 feet interval. Provide additional PDA testing for any revisions to pile type, size or hammer previously approved. The locations of specific piles to be tested must be accepted by the NCTA prior to any PDA test. Perform PDA tests in accordance with ASTM D 4945-89, Standard Test Method for High Strain Dynamic Testing of Piles and this scope of work.

Use current NCDOT inspection forms for drilled piers available on the NCDOT Geotechnical Engineering Unit's webpage. Construct and inspect drilled piers in accordance with the NCDOT Drilled Piers Special Provision. The Design-Build Team shall inspect drilled piers using the Shaft Inspection Device (SID) for any pours using the wet method of concrete placement and for any drilled pier excavations that have remained open greater than 24 hours. Install Crosshole Sonic Logging (CSL) tubes in all drilled piers. CSL testing shall be required for all the drilled piers for each bridge. Submit CSL test information and results to NCTA to determine if the results are acceptable.

Provide field quality control for all bridge foundations, retaining wall and sound barrier foundations including verifying subsurface conditions for drilled piers and bearing for shallow foundations.

The Design-Build Team shall evaluate and document the condition of ponds adjacent to and within the project corridor along with surrounding geology. The Design-Build Team shall conduct and document pre-construction site surveys of the ponds including but not limited to photographs, pond floor elevations, water elevations, and water quality. The Design-Build Team shall conduct and document pre-construction sedimentation studies. Submit documentation of the surveys and the studies to the NCTA. Where construction of the project requires draining of any ponds, the Design-Build Team shall develop and submit to the NCTA for approval a Pond Drainage Plan. (Reference the Environmental Permits Scope of Work).

The prequalified geotechnical firm that prepared the original design shall perform any changes to the foundation designs. All changes shall be based upon additional information, subsurface investigation and / or testing. Drilled pier tip elevations shall not be changed during construction unless the prequalified geotechnical firm that prepared the bridge foundation design redesigns the drilled pier from either an SPT / rock core boring, performed in accordance with ASTM standards at the subject pier location, or observations of the drilled pier excavation. If a drilled pier is designed based on a boring, do not drill a boring inside an open drilled pier excavation. Locate the boring within three pier diameters of the center of the subject pier and drill to a depth of two pier

diameters below the revised tip elevation. If a drilled pier is redesigned based upon observations of the drilled pier excavation, the geotechnical engineer of record shall be present during the excavation to determine the actual subsurface conditions. Send copies of revised designs including additional subsurface information, calculations and any other supporting documentation sealed by a professional engineer registered in the State of North Carolina to the NCTA for review.

Also, send copies of any inspection forms related to foundations, settlement or retaining walls to the NCTA for review.

V. ROADWAY AND STRUCTURE FOUNDATION GUIDELINES:

The Design-Build Team shall be responsible for, but not limited to, addressing, and incorporating if necessary, the following items for the roadway and structure foundation design of the project.

1. Analyze the stability of embankments and utilize recognized geotechnical engineering designs and construction methods accepted by the NCTA and the NCDOT to ensure embankment stability.
2. Analyze embankment settlement and if necessary, recommend and incorporate mitigation through the use of undercut or soil improvement methods such as surcharges, waiting periods, wick drains, column supported embankments, etc.
3. Address, and incorporate if needed, the following regarding embankment problems:
    a. The feasibility of using geo-textiles to achieve stability, reduce excavation of soft soils and reduce the effect of settlement on the roadway.
    b. The need for settlement gauges, slope inclinometers and other embankment monitoring devices and their placement and location.
4. Determine the feasibility, recommend and incorporate types of retaining walls and / or shoring for permanent and / or temporary situations. Design all retaining walls in accordance with the most recent edition of the *AASHTO LRFD Bridge Design Specifications* and applicable FHWA manuals. If the *AASHTO LRFD Bridge Design Specifications* do not provide applicable load and/or resistance factors for certain retaining wall types, then design these walls in accordance with the latest *AASHTO Standard Specification for Highway Bridges* allowable strength design methods.
5. Determine amount of, recommend and incorporate methods to mitigate any differential settlement problems at locations of culverts and utilities.
6. Analyze the stability of cut sections. Utilize recognized geotechnical engineering designs and construction methods to ensure cut slope stability.
7. Analyze the stability of roadway approaches (to the distance from the bridge that affects the stability and design of the bridge foundations) and particularly the end slopes under the bridge, utilizing recognized geotechnical engineering designs and construction methods to ensure stability.

8. Recommend pile, drilled pier or spread footing foundations for structures with regard to bearing capacity, lateral stability, buckling analysis for piles, scour, settlement and constructability.
9. Recommend maximum bearing pressure for spread footings considering both strength limit and service limit states, and effects of adjacent foundations, water table, scour, etc. The scour critical elevation for a spread footing shall be at the bottom of footing elevation.
10. Address the following regarding pile and / or drilled pier foundations:

    a. Method of support – skin friction, tip bearing or combination of both.
    b. Tip elevations and estimated pile lengths.
    c. Ultimate axial load.
    d. Settlement.
    e. Number and location of test piles or piers and dynamic and / or static load testing.
    f. Wave equation analysis using an appropriately chosen pile hammer and cushion material.
    g. Necessity of using steel pile tips for concrete piles or pile points for steel piles.
    h. Effects of vibration on adjacent construction or existing structures.
    i. Corrosion effects of various soils and water (See NCDOT *Structure Design Unit's Policy Manual*).
    j. Downdrag on piles or piers.
    k. Lateral stability and horizontal deflections.
    l. Design scour and scour critical elevations. The scour critical elevation for drilled piers and pile foundations shall be the 500-year design scour elevation.
    m. Point of fixity.
    n. Lateral squeeze for piles.

11. Include in the geotechnical recommendations report a summary table of the bridge foundation recommendations including the following:

    a. WBS project number, TIP number, county, description and bridge station.
    b. Bent (work point) stations, types of foundations, allowable loads, bottom of cap or footing elevations, estimated pile lengths and tip elevations.

12. Address the following items, when applicable, as notes on plans or comments and attach to the summary table:

    a. All appropriate notes on plans (See NCDOT Structure Design Unit's Standard Foundation Notes on Plans).
    b. End slope and extent of slope protection.
    c. Waiting periods for approach slab construction or end bent construction.
    d. Battered piles.
    e. Point of fixity elevations.
    f. Design and scour critical elevations.
    g. Tip elevations.

h. Steel pile points for steel piles or steel pile tips for concrete piles.
i. Number and location of test piles or piers, load tests, dynamic and/or static testing.
j. Required rock socket for drilled piers.
k. Need for permanent steel casing including casing tip elevations, SPT, SID Inspection, CSL and slurry use in accordance with the NCDOT Drilled Piers Special Provision.
l. Range of estimated hammer energies for concrete and pipe piles.

Address any other items affecting the foundation design on the summary sheets and include all final recommendations on the summary sheets.

TRAFFIC CONTROL AND PAVEMENT MARKINGS SCOPE OF WORK (4-15-08)

I. Traffic Control Plans

A. Design Parameters

The Design-Build Team shall prepare the Traffic Control and Pavement Marking Plans for this project following the parameters listed below:

1. Maintain a minimum of three 11-foot lanes in each direction on I-540/NC 540/Western Wake Freeway, unless otherwise noted below.
2. Maintain a minimum of two 11-foot lanes in each direction on US 1, US 64, NC 55 in Durham County (4 and 5 lane sections), and NC 55 Bypass in Wake County, unless otherwise noted below.
3. Maintain a minimum of one 11-foot lane in each direction of McCrimmon Parkway at all times, unless otherwise noted below.
4. Maintain a minimum of one 10-foot lane in each direction on all other roadways, unless otherwise noted below.
5. Traffic control devices when utilized, shall be a minimum 2-foot offset (shy distance) from the edge of travel lane to the face of the traffic control device. Maintain existing shoulder widths when traffic control devices are not required.
6. Use of an approved temporary barrier system shall be shown in the staging concept and shall follow the requirements listed below.
   a. Determine the distance the temporary barrier could deflect and provide the shoulder widths or distance behind temporary barrier to the work area equal to or greater than the possible deflection distance. Regardless of the deflection distances determined by the Design-Build Team, below are the minimal acceptable distances that shall be used:
      - When separating traffic, the minimal inside shoulder for both directions shall be 2-feet and the temporary barrier should be anchored.
      - When using approved temporary barrier system on both sides of the roadway for more than 1000-feet, the outside shoulder width shall be 8-feet minimum or 2-feet minimum if emergency pull off areas are provided every 5000-feet.
      - If the deflection distance can not be maintained to work area, anchored temporary barrier shall be used, follow the NCDOT 2006 *Standard Specifications for Roads and Structures* for when using anchored temporary barrier.
   b. The Design-Build Team is required to determine the length of need, flare rate, clear zone and possible deflection of the barrier proposed to be used.
   c. The approved temporary barrier system shall be completely located on asphalt or concrete surfaces.

7. The lowest allowable design speed for temporary alignments on secondary roads shall be the higher of 10 mph below the posted speed limit or 35 mph. Temporary design speeds for NC, US and *Interstate* routes shall be designed at the current posted speed limit. No speed reduction or speeding penalty ordinances shall be anticipated.

8. *NCDOT Roadway Standard Drawing No. 1101.11* shall be used for merge and shift tapers. All other temporary roadway designs shall follow the NCDOT Roadway Design Manual, *2004 AASHTO A Policy on Geometric Design of Highways and Streets* and the most current Highway Capacity Manual.

   Changes in super elevations should be avoided in the travel lane and shall not exceed 0.04 between edge lines of any direction of travel.

9. Maintain access to all residents, schools and businesses at all times, unless otherwise noted below.

10. No splitting of traffic in the same direction will be allowed, (i.e. separation by any type of barrier, bridge piers, existing median, etc.).

11. All road closures are subject to approval by North Carolina Turnpike Authority (NCTA). The Design-Build Team shall be responsible for investigating all detour routes, including but not limited to, analyzing the traffic capacity, investigating all impacts to emergency services, schools and determining improvements required to accommodate the detoured traffic. Possible detour needs could include, but are not limited to, road closures due to limited horizontal or vertical clearance limits, grade changes in tie in areas and oversize and / or overweight limits. Prior to utilizing a detour, the Design-Build Team shall be responsible for obtaining approval and installing improvements required to accommodate the detoured traffic. Proposed offsite detours shall not have non signalized any at-grade railroad crossings.

    Based upon road user costs, the Design-Build Team can only propose offsite detours for the roadways listed in Intermediate Contract Time #6 listed in Section II. A. below.

    a. The offsite detour for Old US 1 (SR 1101), shall include a signal at the intersection of Kelly Rd. (SR 1163) and Apex-Barbecue Rd. (SR 1162). See Traffic Signals Scope of Work for more information.

    b. Roberts Rd. (SR 1608) and Jenks Rd. (SR 1601) shall not be closed at the same time.

12. Proposed realignment of roadways shall be completed up to but not including the final surface layer prior to permanent or temporary closures of existing roadways.

13. For all roadways within the project limits and accepted detour routes, the Design-Build Team shall be provide access for wide-loads and oversized permitted vehicles. The Design-Build Team shall provide sufficient pavement width and structure, as noted below, for wide-loads and oversized permitted vehicles to safety travel through the work zone.

a. For annual permitted vehicles, a clear width of 18 feet is required for all roadways with the exception of I-540/NC 540/Western Wake Freeway, US 1, US 64, NC 55 and NC 55 Bypass.
b. For I-540/NC 540/Western Wake Freeway, US 1, US 64, NC 55 and NC 55 Bypass., a minimum clear width of 20 feet shall be maintained for single use permitted wide-loads up to 16' wide.
c. The Design-Build Team shall be responsible for verifying that vertical and horizontal clearances are sufficient for the wide-loads and oversized permitted vehicles.

14. At a minimum, one CMS board shall be required per direction when construction activities adversely impact the traveling public on the following roadways: I-540/NC 540/Western Wake Freeway, US 1, US 64, NC 55 and NC 55 Bypass. Depending on the impact to traffic the CMS board(s) may need to be in continuous operation until the construction activity impacting traffic is complete. CMS boards shall also be required to provide information for alternate routes, when lane closures are utilized and for all other construction activities that adversely impact the traveling public. All messages displayed on the CMS boards shall be approved by NCTA prior to use and include in the Traffic Control plans.

15. Proposed Western Wake Freeway shall not be open to traffic until the project is substantially complete and Toll equipment is operational. During construction, Western Wake Freeway shall not be used for temporary offsite detours.

16. The Design-Build Team shall take steps to minimize disruptions to existing roadway facilities during the life of the project and shall demonstrate how the design, traffic control phasing and construction minimizes inconvenience to the motorist on these facilities.

17. The Design-Build Team shall investigate pedestrian facilities and maintain facilities during the life of the project. The school on Olive Chapel Rd. (SR 1160) has walk to school days, the Design-Build Team shall investigate the schools needs and all other facilities effected by this project and possible offsite detours.

B. Traffic Control and Final Pavement Marking Plan requirements:

The Design-Build Team shall develop Traffic Control and Pavement Marking Plans that maintain all types of traffic as defined by *the Manual for Uniform Traffic Control Devices* including but not limited to pedestrians, bicycles, motor vehicles, commercial trucking, wide loads and oversized loads. . The Traffic Control and Pavement Marking Plans developed by the Design-build Team shall be ADA compliant.

The Staging Concept and Preliminary Pavement Marking Plans shall meet the Contract requirements before the first phase submittal can be submitted. Construction shall not begin until the first phase submittal meets the requirements of the contract. Construction shall not begin on subsequent phase submittals until they meet the requirements of the Contract. Any changes to the staging concept after reviewed, will require a submittal for

review prior to any future phasing submittals can be submitted. All submittals shall follow the *2006 NCDOT Roadway Standard Drawings*, *2006 Standard Specifications for Roads and Structures*, the "*Guidelines for Preparation of Traffic Control and Pavement Marking Plans for Design-Build Projects*", *Manual for Uniform Traffic Control Devices*, and the "*Design-Build Submittal Guidelines*".

The Design-Build Team shall select a Private Engineering Firm (PEF) that has a minimum of five years of designing and sealing Traffic Control and Pavement Marking Plans for the North Carolina Department of Transportation (NCDOT) on comparable projects. The Technical Proposal shall list projects, including description and similarity to the subject project.

The Work Zone Traffic Control web site contains useful information that may be needed for the design of the traffic control and pavement marking plans.

http://www.ncdot.org/doh/preconstruct/wztc/

The Final Pavement Marking Plans shall address any required modifications to existing markings located outside the project limits as a result of the proposed construction of this project. The Design-Build Team shall be responsible for installing such markings and markers.

II. Project Operations Requirements

The following are Time Restrictions and notes that shall be included with the Traffic Control Plans General Notes unless otherwise noted:

A. Time Restrictions

1. Intermediate Contract Time #1 and 2 for Lane Narrowing, Closure, Holiday and Special Event Restrictions.

As a minimum, the Design-Build Team shall maintain existing traffic patterns and shall not close or narrow a lane during the times below. When traffic is placed into the final pattern for any roadway, that will become the minimal traffic pattern and the following time restrictions will still apply.

Road name	Day and Time Restrictions
I-540, NC 540, Western Wake Freeway and multi lane ramps. See II., A., 2. For time restrictions for one lane ramps.	• Monday thru Friday, between 9:01pm 12:00am (midnight) maintain 2 lanes in each direction at a minimum. • Monday thru Friday, between 12:01am and 5:59am, maintain 1 lane in each direction at a minimum. • Saturday and Sunday between 10:00am to 6:00pm, maintain at least 1 lane per direction.
NC 55 in Durham County and US 64	Monday thru Friday 6:00am to 8:00pm Saturday and Sunday 10:00am to 6:00pm

Carpenter Fire Station Rd. (SR 1624) and US 1	Monday thru Friday	6:00am to 7:00pm
NC 55 Bypass in Wake County, Green Level Church Rd. (SR 1600), and Olive Chapel Rd. (SR 1160)	Monday thru Friday	6:00am to 9:00am and 4:00pm to 7:00pm

The Design-Build Team shall not install or remove any traffic control device required for narrowing or closing a lane during the times listed above.

In addition to the lane narrowing and closure restrictions stated above, during holidays, holiday weekends, special events, or any other time when traffic is unusually heavy on the roadways listed here within, the Design-Build Team shall not close or narrow a lane of traffic, detain the traffic flow or alter the traffic flow. As a minimum, these requirements / restrictions apply to the following schedules:

(a) For New Year's between the hours of 6:00 a.m. December 31st to 8:00 p.m. January 3rd. If New Year's Day is on a Friday, Saturday or a Sunday, then from 6:00 a.m. the Friday before New Year's Day to 8:00 p.m. the following Tuesday.

(b) For Easter, between the hours of 6:00 a.m. the Friday before Easter and 8:00 p.m. the Tuesday after Easter.

(c) For Memorial Day, between the hours of 6:00 a.m. the Friday before Memorial Day to 8:00 p.m. the Wednesday after Memorial Day.

(d) For Independence Day, between the hours of 6:00 a.m. July 3rd and 8:00 p.m. July 6th. If Independence Day is on a Friday, Saturday or Sunday, between the hours of 6:00 a.m. the Thursday before Independence Day and 8:00 p.m. the Tuesday after Independence Day.

(e) For Labor Day, between the hours of 6:00 a.m. the Friday before Labor Day to 8:00 p.m. the Wednesday after Labor Day.

(f) For Thanksgiving, between the hours of 6:00 a.m. the Tuesday before Thanksgiving to 8:00 p.m. the Tuesday of the following week.

(g) For Christmas, between the hours of 6:00 a.m. the Friday before the week of Christmas Day and 8:00 p.m. the following Tuesday after the week of Christmas Day.

(h) For special events at area universities, including football games, basketball games, and graduations, and other area events, including Carolina Hurricanes' playoff games and the State Fair, six hours prior to the event in the prominent travel direction and six hours after the event in the prominent travel direction Confirm the prominent travel directions with North Carolina Turnpike Authority a minimum of 72 hours prior to the event.

Liquidated Damages for Intermediate Contract Time #1 for the above lane narrowing, lane closure, holiday and special event time restrictions for Current I-540, NC 540, Western Wake Freeway, NC 55 in Durham County and US 64 are $5,000.00 per 30 minutes or any portion thereof..

Liquidated Damages for Intermediate Contract Time #2 for the above lane narrowing, lane closure, holiday and special event time restrictions for Carpenter Fire Station Rd. (SR 1624), US 1, NC 55 Bypass in Wake County, Green Level Church Rd. (SR 1600) and Olive Chapel Rd. (SR 1160), are $1,000.00 per hour or any portion thereof.

2. **Intermediate Contract Time #3, 4 and 5 for Road Closure Restrictions for Construction Operations.**

As a minimum, the Design-Build Team shall maintain the existing traffic pattern for all roadways and follow the road closure restrictions listed below. When a road closure is used, the Design-Build Team shall reopen the travel lanes by the end of the road closure duration to allow the traffic queue to deplete before re-closing the roadway.

a. The Design-Build Team shall not close I-540, NC 540, Western Wake Freeway or any ramps and US 64 or any ramps during the times listed below. Road Closures shall only be allowed for the operations listed in this intermediate time restriction.

Sunday through Saturday - 5:00 a.m. to 12:01 a.m.

b. The Design-Build Team shall not close McCrimmon Parkway, Carpenter Fire Station Rd. (SR 1624), Green Hope School Rd. (SR 1621), Green Level West Rd. (SR 1615), Green Level Church Rd. (SR 1600), Kelly Rd. (SR 1163), Olive Chapel Rd. (SR 1160), Apex Barbecue Rd. (SR 1162), US 1 or any ramps, Old Holly Springs-Apex Rd. (SR 1153) and NC 55 Bypass during the times listed below. Road Closures shall only be allowed for the operations listed in this intermediate time restriction.

Sunday through Saturday - 6:00 a.m. to 10:00 p.m.

Maximum road closure duration of **30 minutes** shall be allowed for the roadways listed in this ICT for the following operations:

- Traffic shifts, to complete tie-in work and placement of pavement markings.
- Tie-in work for –L- and / or –Y- lines, unless an approved detour route is operational.
- Signal Pole installation and cable installation required across travel lanes.

Maximum road closure duration of **60 minutes** shall be allowed for the roadways listed in this ICT for the following operations:

- Girder Installation or removal of existing girders.
- Installation of Overhead Sign structures.

- ITS Components and Toll Gantries.

Proposed road closures for any road within the project limits shall be approved by the Engineer prior to incorporation in the Traffic Control Plans.

Liquidated Damages for Intermediate Contract Time #3 for the above road closure time restrictions for certain construction operations for I-540, NC540, Western Wake Freeway and US 64 are $2,500.00 per 15 minute period or any portion thereof.

Liquidated Damages for Intermediate Contract Time #4 for the above road closure time restrictions for certain construction operations for McCrimmon Parkway, Carpenter Fire Station Rd. (SR 1624), Green Level Church Rd. (SR 1600), Olive Chapel Rd. (SR 1160), US 1, and NC 55 Bypass are $500.00 per 15 minute period or any portion thereof.

Liquidated Damages for Intermediate Contract Time #5 for the above road closure time restrictions for certain construction operations for Green Hope School Rd. (SR 1621), Green Level West Rd. (SR 1615), Kelly Rd. (SR 1163), Apex Barbecue Rd. (SR 1162), Old Holly Springs-Apex Rd. (SR 1153) are $200.00 per 15 minute period or any portion thereof.

3. **Intermediate Contract Time #6 for the closure of the roadways to construct portions of the proposed Western Wake Freeway.**

This Intermediate contract time will allow the Design-Build Team the option to complete some work using approved offsite detours limited to **one (1) closure for each roadway listed below. For the -Y- lines listed below, the duration shall be a maximum of 7 consecutive calendar days** for proposed tie-in work and/or –L- line structures construction over a –Y- line and **a maximum of 300 consecutive calendar days** for proposed –Y- line structures over the –L- line:

- Roberts Rd. (SR 1608)
- Jenks Rd. (SR 1601)
- Old US 1 (SR 1101)

Closure limits of a roadway shall be minimized to include the proposed construction area and must maintain traffic to all local property owners within the closure limits.

The Design-Build team may propose a shorter closure duration than those noted above. The Design-Build Team shall note all proposed closures and durations in the Technical proposal.

Proposed road closures for any road within the project limits shall be approved by the Engineer prior to incorporation in the Traffic Control Plans.

Liquidated Damages for Intermediate Contract Time #6 for the above road closure time restrictions for Roberts Rd. (SR 1608), Jenks Rd. (SR 1601) and Old US 1 (SR 1101) are $500.00 per calendar day.

4. Hauling Restrictions

The Design-Build Team shall adhere to the hauling restrictions noted in the *2006 NCDOT Standard Specifications for Roads and* Structures and following the time restrictions for the roadways within the project limits listed below:

For Multi-Vehicle Hauling:

Road Name	Day and Time Restrictions	
NC 55, NC 55 Bypass, US 1, and US 64	6:00 AM to 9:00AM and 4:00 PM to 7:00PM	Monday – Friday

The Design-Build Team shall not conduct any hauling operations against the flow of traffic of an open travelway unless the work area is protected by an approved temporary traffic barrier or guardrail.

Except at an intersection or ramp, hauling vehicles shall not leave or enter an open travel lane of a partial or full control of access facility at less than 10 mph below the posted speed limit. At all other locations and facilities, hauling vehicles shall adhere to traffic laws and signs. All entrances and exits for hauling to the work zone shall follow the Roadway Standard Drawings.

The Design-Build Team shall include truck ingress and egress details in the Traffic Control Plans. Additional traffic control devices maybe required when hauling is conducted across roadways.

B. Lane and Shoulder Closure Requirements

The Design-Build Team shall not install more than 3.0 miles of lane closures on I-540, NC 540, Western Wake Freeway, US 1, NC 55 and US 64 within the project limits, measured from the beginning of the merge taper to the end of the lane closure.

For all other roadways the Design-Build Team shall not install more than 2.0 miles of lane closures within the project limits, measured from the beginning of the merge taper to the end of the lane closure.

Within the project limits, the Design-Build Team shall not install more than one lane closure, in any one direction, on any roadway. A lane closure may be installed in opposing directions (maximum of one in each direction) as long as a minimum distance of four miles is maintained between the lane closure limits.

The Design-Build Team shall remove lane closure devices from the lane when work is not being performed behind the lane closure or when a lane closure is no longer needed.

When personnel and / or equipment are working within 40 feet of an open travel lane, the Design-Build Team shall close the nearest open shoulder using *2006 NCDOT Roadway Standard Drawing No. 1101.04*, unless the work area is protected by an approved temporary traffic barrier or guardrail.

When personnel and / or equipment are working on the shoulder adjacent to an undivided facility and within 5 feet of an open travel lane, the Design-Build Team shall close the nearest open travel lane using *2006 NCDOT Roadway Standard Drawing No. 1101.02*, unless the work area is protected by an approved temporary traffic barrier or guardrail.

When personnel and / or equipment are working on the shoulder adjacent to a divided facility and within 10 feet of an open travel lane, the Design-Build Team shall close the nearest open travel lane using *2006 NCDOT Roadway Standard Drawing No. 1101.02*, unless the work area is protected by an approved temporary traffic barrier or guardrail.

When personnel and / or equipment are working within a lane of travel of an undivided or divided facility, the Design-Build Team shall close the lane using the appropriate *2006 NCDOT Roadway Standard Drawing.* The Design-Build Team shall conduct the work so that all personnel and / or equipment remain within the closed travel lane.

The Design-Build Team shall not perform work involving heavy equipment within 15 feet of the edge of travelway when work is being performed behind a lane closure on the opposite side of the travelway.

C. Pavement Edge Drop off Requirements

The Design-Build Team shall backfill at a 6:1 slope up to the edge and elevation of existing pavement that has a difference in elevation following the criteria listed below and compacted using an acceptable material.

Elevation differences that exceed 2 inches on roadways with posted speed limits of 45 mph or greater and where the paved shoulders are less than 4 feet wide.

Elevation differences that exceed 3 inches on roadways with posted speed limits less than 45 mph and where the paved shoulder is wider than 4 feet.

Elevation differences that exceed 6 inches on all roadways with posted speed limits of 45 mph or greater and where paved shoulders are wider than 4 feet.

Do not exceed a difference of 1.5 inches in elevation between open lanes of traffic. Install advance warning “UNEVEN LANES” signs (W8-11) 500 feet in advance.

Ensure that all areas have proper temporary drainage.

D. Traffic Pattern Alterations

The Design-Build Team shall notify NCTA in writing twenty-one (21) calendar days prior to any traffic pattern alteration. See the Public Information Scope of Work for providing information to the public.

E. Signing

The Design-Build Team shall install advance work zone warning signs when work is within 100 feet from the edge of travel lane and no more than three days prior to the beginning of construction.

When no work is being conducted for a period longer than one week, the Design-Build Team shall remove or cover all advance work zone warning signs, as directed by NCTA.

All detour signing shall be the responsibility of the Design-Build Team. The Design-Build Team shall cover or remove all detour signs within and off the project limits when a detour is not in operation.

The Design-Build Team shall ensure all necessary signing is in place prior to altering any traffic pattern.

The Design-Build Team shall maintain all Guide Signs throughout the life of the project, and remove any Guide Signs when the signs are no longer applicable.

F. Traffic Barrier

Install an approved temporary traffic barrier system a maximum of two (2) weeks prior to beginning work in any location. Once the approved temporary traffic barrier system is installed at any location, proceed in a continuous manner to complete the proposed work in that location.

Once the approved temporary traffic barrier system is installed and no work has been performed behind the approved temporary traffic barrier system for a period longer than two (2) months, remove / reset the approved temporary traffic barrier system unless barrier is protecting a hazard.

Protect the approach end of the approved temporary traffic barrier system at all times during the installation and removal of the barrier. If system requires installation of a temporary crash cushion, a truck mounted impact attenuator can be used for a maximum of 72 hours until the temporary crash cushion can be installed.

Offset the approach end of the approved temporary traffic barrier system a minimum of 40 feet from oncoming traffic or protect at all times by a temporary crash cushion if the approved temporary traffic barrier system requires a temporary crash cushion.

Install approved temporary traffic barrier system with the traffic flow, beginning with the upstream side of traffic. Remove the approved temporary traffic barrier system against the traffic flow, beginning with the downstream side of traffic.

To close or keep closed the section of the roadway until the approved temporary traffic barrier system can be placed or after the approved temporary barrier system is removed, drums should not exceed a spacing in feet equal to 2.0 times the posted speed limit for tangent sections.

Approved temporary traffic barrier system if utilized along the right side of an acceleration ramp/loop shall have a minimum of 200-feet from the end of the pavement marking taper to the beginning of the barrier taper.

The Design-Build Team shall be responsible for providing a safe area (lateral offset behind barrier to work area) behind the approved temporary barrier system in accordance

with the NCHRP-350 deflections from crash testing. If the safe area can not be maintained, an anchored barrier system shall be required.

G. Traffic Control Devices

Use traffic control devices that conform to all NCDOT requirements and are listed on the NCDOT's Approved Products List as shown on NCDOT's Work Zone Traffic Control website. Use of devices not shown on the Approved Product List shall require approval from the State Alternative Delivery Engineer and NCTA prior to use.

Space channelizing devices should not exceed a spacing in feet equal to 2.0 times the posted speed limit for tangent sections. Place channelizing devices 10-feet on-center in radii for intersection and driveways, and 3-feet off the edge of an open travelway, when lane closures are not in effect.

Place Type III barricades, with "ROAD CLOSED" Sign R11-2 attached, of sufficient length to close entire roadway. Stagger or overlap barricades to allow for ingress or egress.

Place sets of three drums perpendicular to the edge of the travelway on 500-foot centers when unopened lanes are closed to traffic. These drums shall be in addition to channelizing devices.

H. Pavement Markings, Markers and Delineation

Placement of final pavement markings and markers shall proceed only if the Final Pavement Marking Plans meet the requirements of the contract, the "*Guidelines for Preparation of Traffic Control and Pavement Marking Plans for Design-Build Projects*", and the "*Design-Build Submittal Guidelines*".

The Design-Build Team shall use pavement marking and marker products that conform to all NCDOT's requirements and specifications, as listed on the NCDOT's Approved Products List located on the NCDOT's Work Zone Traffic Control website. (Note not required in General Notes for the Traffic Control Plan)

The Design-Build Team shall install pavement markings and markers in accordance with NCDOT's 2006 *Standard Specifications for Roads and Structures*, and in accordance with the manufacturer's procedures and specifications. (Note not required in General Notes for the Traffic Control Plan)

The Design-Build Team shall install pavement markings and pavement markers on the final surface as follows:

Road	Marking
Asphalt surfaces	Thermoplastic or Polyurea with standard beads
Concrete surfaces	Polyurea with Standard Beads

Snowplowable Markers are required for the Western Wake Freeway. For all other roadways, provide the type of marker that matches what is currently installed. Permanent Raised markers are required on all bridge decks.

Snowplowable markers shall be installed a minimum of 3" from longitudinal concrete joints and 1' from transverse concrete joints.

All US routes and I-540/NC 540/Western Wake Freeway require 50% wider markings, i.e., lane lines, edge lines and skips shall be 6 Inches wide.

If 100% diamond grinding is required on concrete surfaces, cold applied plastic, Type 2, permanent high performance tape with black contrast border shall be used for all skips.

The Design-Build Team shall install temporary pavement markings and temporary pavement markers on the interim surface or temporary pattern as follows:

Road	Marking	Marker
All Roads and Existing Structures.	Minimum of Paint	Temporary Raised
Proposed Structures	Cold Applied Plastic (Type IV)	Temporary Raised

When using Cold Applied Plastic (Type IV) pavement markings, place temporary raised markers half on and half off edgelines and centerlines to help secure the tape to the roadway. Markers shall be spaced the appropriate distance apart as described by *2006 NCDOT Roadway Standard Drawing No. 1250.01, Sheet 1 of 3*.

If a roadway is open to traffic prior to installation of proposed monolithic islands, install markings with the proper color pavement marking to outline the location of the proposed monolithic island.

Place at least two applications of paint on the final wearing surface on new pavement. Place additional applications of paint upon sufficient drying time, as determined by NCTA.

Place at least two applications of paint for temporary traffic patterns that will remain in place over three (3) months. Place additional applications of paint upon sufficient drying time, as determined by NCTA.

Tie proposed pavement marking lines to existing pavement marking lines.

Replace any pavement markings that have been damaged by the end of each day's operation.

Remove any conflicting markings or markers before shifting traffic to a new pattern.

Removal of the temporary pavement markings shall be accomplished by using water blasting, sand blasting, shot blasting systems or other approved systems to minimize damage to the road surface. All systems shall be required to remove 100% of the pavement marking without removing more than 1/32 inch of the pavement surface.

I. Temporary / Final Signals

Notify NCTA two months before a traffic signal installation is required.

Shift and revise all signal heads as required by the approved Signal Plans developed by the Design-Build Team.

J. Miscellaneous

Provide portable temporary lighting to conduct night work in accordance with the *2006 NCDOT Standard Specifications for Roads and Structures*.

Police may be used to maintain traffic through intersections. The Design-Build Team shall be responsible for coordinating with the law enforcement agency if they will be used. The Traffic Control Staging Concept shall address when police will be used, where they will be used, duration and why. Utilize Officers who are outfitted with law enforcement uniforms and marked vehicles, which are equipped with proper lights mounted on top of the vehicle, and agency emblems.

Coordinate with the NCTA and the Engineer in charge of any project in the vicinity of this project for any work that may effect the construction and the Traffic Control of this project.

The Design-Build Team shall not anticipate a speed reduction or $250 speeding penalty ordinance for this project, including for US1. Guidelines for speed reduction and $250 speeding penalty ordinances are located on the Traffic Control web site. If the guidelines justify the need for either ordinance, an engineering study will need to be preformed by an NCDOT Regional Traffic Engineer and the Ordinance signed by the NCDOT State Traffic Engineer. Submit request for the engineering study to be performed for the speed reduction and/or the $250 speeding penalty ordinance to the NCDOT State Alternate Delivery Engineer and allow 6 weeks to complete study and provide ordinance(s) if approved.

Temporary Shoring for the Maintenance of Traffic may be required, and estimated locations where temporary shoring will be anticipated shall be identified in the Staging Concept. The NCDOT Work Zone Traffic Control Unit has a detail providing design information on where temporary NCDOT barrier shall be located in relation to the shoring and traffic location. The Geotechnical Engineering Unit web site has more information on temporary shoring. (Notes pertaining to Temporary Shoring are not required in General Notes for the Traffic Control Plan)

http://www.ncdot.org/doh/preconstruct/highway/geotech/formdet/standards.html

The Design-Build Team shall identify on the appropriate Traffic Control detail where temporary shoring will be used by providing station limits, offsets, the type of shoring and where temporary traffic barrier will be located if needed.

SIGNING SCOPE OF WORK (04-08-08)

General

The signing shall be designed, fabricated, and constructed by the Design-Build Team in accordance with the latest edition of the *Manual on Uniform Traffic Control Devices (MUTCD)*, the *NC Supplement to the MUTCD*, *NCDOT Standard Specifications for Roads and Structures (July 2006)*, the *NCDOT Roadway Standard Drawings (July 2006*, the latest *Standard Specifications for Structural Supports for Highway Signs, Luminaires, and Traffic Signals* published by AASHTO, "Guidelines for Preparation of Signing Plans for Design-Build Projects", "Design-Build Submittal Guidelines", NCTA's Triangle Expressway Signing Schematic dated April 1, 2008, and NCTA's Toll Facility Signing Requirements.

Signing Plan Requirement

The Design-Build Team shall select a Private Engineering Firm (PEF) that has experience in designing Signing Plans for NCDOT on projects comparable to this project. NCTA shall provide the Design-Build Team with the Triangle Expressway Signing Schematic dated April 1, 2008 and the Toll Facility Signing Requirements for the Triangle Expressway corridor for the Design-Build Team's use in developing its signing plan. The Design-Build Team shall not reduce any signing shown in the Triangle Expressway Signing Schematic dated April 1, 2008.

Signing Project Limits

The Design-Build Team shall be responsible for the design, fabrication and installation of all toll road and standard signs required on Western Wake Freeway, Green Level West Rd, US 64, Old US 1, US 1, NC 55 and NC 55 Bypass, all ramps, loops, and -Y- Lines. The signing limits at the north end of the project shall extend to the railroad near NC 55. All signs on NC 55 for Triangle Expressway northbound shall be provided by others.

The Design-Build Team shall also be responsible for the design, fabrication and installation of all signs required beyond the construction limits of the mainline, all -Y- Lines and all cul-de-sacs to ensure adequate advance signage and spacing is provided. The Design-Build Team shall coordinate the posted speed limits for this facility with the NCDOT Traffic Engineering and Safety Systems Branch's Capital Region Traffic Engineer.

The Design-Build Team shall be responsible for installing overlays for messages, shields, and cardinal directions within the U-4763B project limits at such time that the Western Wake Freeway project is nearing substantial completion. The Design-Build Team for the Triangle Parkway (U-4763B) project will design and fabricate these overlays for messages, cardinal directions and shields and provide to the Design-Build Team for storage and installation. The Design-Build Team and NCTA shall inspect all signs from the Triangle Parkway (U-4763B) project prior to accepting the signs. The Design-Build Team shall store signs in accordance with Division 9 of the NCDOT *Standard Specifications*. All cost associated with storage of signs and replacing signs damaged during storage shall be the responsibility of the Design-Build Team.

Sign Design

The Design-Build Team shall be responsible for all Type A, B, and D sign designs, fabrication and installation for ground mounted signs including temporary "All Traffic Exit" signing. The Design-Build Team shall be responsible for sizing, fabricating, locating and installing all Type E (warning and regulatory signs) and Type F signs (route marker assemblies), and milemarkers.

NCTA Trailblazer shields for guidesigns and F-assemblies shall be consistent with the sizes required for standard U.S. and Interstate shields within the *MUTCD*.

The Design-Build Team shall design, fabricate and install milemarkers every half mile on the project. Each milemarker location shall have two milemarkers mounted back to back on one U-post on the outside shoulder for each direction of travel on the mainline. The milemarker signs shall include the NCTA logo on the sign. NCTA will provide the Design-Build Team the logo design for the milemarker. The milemarker designs shall be in accordance with the Intermediate Enhanced Reference Location Signs (D10-5) referenced in the *Standard Highway Signs (2004 Edition)*. The Design-Build Team shall remove and dispose of NC 540 milemarkers and design, fabricate and install NCTA milemarkers on sections that will become Triangle Expressway.

The Design-Build Team shall design, fabricate and install Thru Bolts for Type A Signs in accordance with the NCDOT Roadway Standard Drawing No. 901.10 dated January 2008.

All sign designs shall be included in the Signing Plans. All sign designs shall be prepared using the latest version of GuidSign software. The latest GuidSign updates are located at the following website:

http://www.ncdot.org/doh/preconstruct/traffic/congestion/SIGN/default.html

Electronic Toll Collection Signing

The Design-Build Team shall be responsible for the design, fabrication, and installation of all toll road signs in accordance with the Toll Facility Signing Requirements (TS-1 and TS-2) provided by the NCTA. The background for toll guide signs shall be green. An Electronic Toll Collections Signing (ETC) logo pictograph, provided by NCTA, shall be used on the ETC signs. Design of signs containing logos shall be in accordance with the recommendations found in the October 12, 2006 Federal Highway Administration (FHWA) policy memorandum on Traffic Control Strategies for Toll Plazas.

Historic Green Level Signing

The Design-Build Team shall design, fabricate and install four cast aluminum signs that delineate the Green Level Historic District boundary in accordance with the Memorandum of Agreement between the FHWA and the State Historic Preservation Office. The Design-Build Team shall coordinate the design, type of supports and locations of the signs with the Town of Cary, Wake County Historic Preservation Commission, the North Carolina State Historic Preservation Office, NCDOT and NCTA.

Sign Maintenance

The Design-Build Team shall maintain all existing ground mounted and overhead signs that are affected by construction, including temporary installations of Guide Signs on supports, overhead assemblies, foundations, lighting systems and any other element of the sign system in accordance with Section 908-3(C) of *2006 Standard Specifications for Roads and Structures* to ensure signs are properly maintained and visible during project construction.

Temporary Signs

See Signing Section of the Traffic Control Scope of Work for temporary signing.

Sign Locations

The Design-Build Team shall be responsible for determining the station locations for all signs. To avoid sign placement in locations where their usefulness will be short-lived, the Design-Build Team shall coordinate the proposed sign designs and locations with existing and future projects through NCTA and NCDOT.

Ground Mounted Support Designs

NCDOT will provide the software for ground mounted sign support designs. The Design-Build Team is responsible for all design, fabrication, and installation of ground mounted supports and signs. Instructions for loading support design software will be made available upon request**.**

Exit Gore signs shall be erected on omni-directional breakaway supports.

Overhead Sign Assemblies

The Design-Build Team shall be responsible for the design, fabrication, and installation of new overhead sign assemblies for the project including those for the future DMS identified on the Triangle Expressway Signing Schematic dated April 1, 2008.

The Design-Build Team may modify existing overhead sign assemblies to accommodate proposed signs if the following conditions are met:

- In the event that the total area of all sign panels on the structure exceeds the original design wind load area for that structure, then a structural analysis shall be performed that satisfies the NCTA that the existing structure can accommodate the proposed sign panels in accordance with the latest version of the latest AASHTO *Standard Specifications for Structural Supports for Highway Signs, Luminaires, and Traffic Signals.*
- Otherwise, the Design-Build Team shall demonstrate that the total area of all sign panels on the structure does not exceed the original design wind load area for that structure.

The Design-Build Team shall prepare shop drawings for NCTA and the NCDOT Alternative Delivery Unit's review of all modified overhead sign structures.

The windspeed for the overhead sign assembly designs is 90 MPH. The Design-Build Team is responsible for calculating the windload area for the overhead sign assemblies. The windload area will be equal with the proposed sign panel height and width on the overhead sign assemblies. Include exit panels as part of the sign height when calculating the windload area. The coordination with future projects and sign messages shall be considered when designing and fabricating overhead sign assemblies.

Overhead Sign Assemblies denoted in color on the Triangle Expressway Signing Schematic dated April 1, 2008 shall be designed, fabricated and installed in accordance with the Aesthetics Design Scope of Work.

The Design-Build Team shall use the minimum specifications below for the design of overhead and pedestal sign supports for DMS boards:

> Mainline Gantry Locations: Color DMS with 3 lines of text (18" characters) with front access. DMS size of 25-10" width, 7'-11" height, and 1'-2" depth. DMS weight of 2400 lbs. Note that specifications equate to a Daktronics model VF-2420-27x110-66-RGB, an unspecified Ledstar model and Adaptive Micro Solutions Model AlphaEclipse Excite 35mm.
>
> Ramp Gantry Locations: Color DMS with 3 lines of text (12" characters) with front access. DMS size of 15'-0" width, 5'-1" height, and 1'-2" depth. DMS weight of 2200 lbs. Note that specifications equate to a Daktronics model VF-24X0-27x90-46-A and Adaptive Micro Solutions Model AlphaEclipse Excite 35mm.
>
> Mainline Non-Gantry Locations: Color DMS with 3 lines of text (18" characters) with walk-in access. DMS size of 25-9" width, 7'-11" height, and 4'-0" depth. DMS weight of 3530 lbs. Note that specifications equate to a Daktronics model VF-2000-27x110-66-RGB.

The Design-Build Team shall design, fabricate, and install overhead and pedestal sign supports and foundations in accordance with the Standard Special Provisions for Overhead Sign Supports and Overhead Sign Foundations.

The Design-Build Team shall be responsible for designing, fabricating and installing median barrier footing and median transitional barrier in accordance with the *2006 Roadway Standard Drawing No 854.05* for any new overhead sign assembly that will replace an existing assembly mounted on median barrier.

The Design-Build Team shall justify the bottom edge of all signs on each assembly in a horizontal plane.

Monotube sign support structures shall not be allowed.

Pedestal Overhead Sign Assemblies Option

The Design-Build Team has the option to design pedestal overhead sign assemblies for advance guide signs on multi lane facilities as an alternative to cantilever overhead sign assemblies. Signs with "EXIT ONLY" designation shall not utilize pedestal assemblies. The Design-Build Team may use pedestal overhead assemblies for DMS signs. The Design-Build Team shall clearly indicate in their Technical Proposal if they choose this option. Pedestal DMS sign assemblies shall include aesthetic considerations consistent with the overhead sign structures. Pedestal overhead sign assemblies shall have a 20 feet offset from the edge of pavement to the centerline of the support. The Design-Build Team shall install guardrail or any other approved protection for the overhead sign support. Exit directional signing shall be mounted on cantilever overhead sign assemblies over the appropriate lane(s).

Overhead Sign Supports

Median sign supports shall be located in the center of the median. For the mainline, sign supports shall be a minimum of 20 feet from the edge of the outside travel lane and be protected by guardrail. For –Y- Lines, it is preferred that sign supports be located 32 feet from the outside travel lane. If 32 feet can not be attained, the overhead sign supports shall be located 20 feet minimum from the edge of the travel lane and protected by guardrail.

Overhead Sign Sheeting

The Design-Build Team shall use either Type VIII or IX reflective sheeting for the legends (text) and background on overhead signs; however, the type sheeting used shall be consistent throughout the project. For proposed signs to be erected on existing overhead sign assemblies with sign lighting, the Design-Build Team shall use Type III sheeting.

No overhead sign lighting is required for advance guide or exit directional overhead signs.

Guardrail or Other Protection for Signs and Overhead Assemblies

The Design-Build Team shall be responsible for determining, designing and installing any protection for proposed and existing sign supports.

Signing Roadway Standards, Typical Sheets and Specifications

Signing roadway standards and typical sheets to be used in summarizing quantities, standard specifications, and compiling Type E and F signs can be located at the following website:

http://www.ncdot.org/doh/preconstruct/traffic/congestion/SIGN/default.html

The Design-Build Team shall incorporate the appropriate information onto these sheets and submit them to NCTA and the NCDOT State Alternative Delivery Engineer for review and acceptance.

Removal and Disposal of Existing Signs

The Design-Build Team shall be responsible for determining existing signs that will no longer be needed upon completion of the project, on -Y- lines and project tie-ins. The Design-Build Team shall be responsible for removal and disposal of these signs and supports. The Design-Build Team shall show and note these signs on the signing plan view sheets.

Signing Construction Revisions

Any construction revision must be submitted to NCTA and the NCDOT Alternative Delivery Unit for review prior to incorporation.

Toll Road and DMS Assemblies

The DMS locations are shown in the Triangle Expressway Signing Schematic dated April 1, 2008. The NCTA and the NCDOT Alternative Delivery Unit shall review all final DMS locations.

The Design-Build Team shall determine exact station locations for Toll Road and DMS assemblies, design structure line drawings including dead load, DMS notes and details, design windspeed, complete field verification, provide conduit and all other requirements for overhead sign assemblies to be approved by NCTA.

The Dynamic Message Signs will be installed under a separate contract. The Design-Build Team shall coordinate all requirements of this scope of work with the Contractor that will install the Dynamic Message Signs.

TRAFFIC SIGNALS SCOPE OF WORK (4-11-08)

I. TRAFFIC SIGNALS

The Design-Build Team shall design and prepare plans for the traffic signal installations. This work shall include, but not be limited to, the preparation of Traffic Signal Plans, Metal Pole Loading Diagrams, Electrical and Programming Details, Utility Make-Ready Plans, Communications Cable & Conduit Routing Plans and Project Special Provisions. These plans shall be prepared in accordance with the "*Design-Build Submittal Guidelines*" and the "*Guidelines for Preparation of Traffic Signal & Intelligent Transportation System Plans on Design-Build Projects*" available on NCTA's website.

The Design-Build Team shall select a Private Engineering Firm (PEF) that has experience designing signal plans for NCDOT on comparable projects. The Technical Proposal shall list projects, including description and similarity to the subject project.

A pre-design meeting shall take place between the NCTA, NCDOT ITS & Signals Unit, the Design-Build Team, and any other pertinent NCDOT personnel before signal designs begin. Signal plan submittals shall only be reviewed and approved by NCTA and NCDOT ITS & Signals Unit after this pre-design meeting.

This work consists of installing SIX (6) new traffic signals and revising FOUR (4) existing traffic signals at the intersections listed below and connecting them into three separate Fiber Optic Closed Loop Signal Systems. Also, ONE (1) temporary signal will be installed and TWO (2) existing traffic signals will be removed. One additional future signal will require accommodation as outlined below. Revision of existing traffic signals may include, but not be limited to, new local controller signal timing, cables, poles, controllers, and/or signal heads. The extent of the revision(s) shall be proposed by the Design-Build Team based on construction phasing and the final geometry of the completed project.

The signal locations are:

CLOSED LOOP SIGNAL SYSTEM #1 – NC 55 Bypass			
Signal Inventory Number	**Intersection Description**	**Signal Status**	**Work Requirements**
05-2314	NC 55 Bypass at Western Wake Freeway Eastbound Ramps	New	Install a new, fully actuated Traffic Signal using custom designed metal poles with straight mastarms as the signal supports, and a 2070L controller in a 170 cabinet. Include this signal in the new Fiber Optic CLS #1.
FUTURE	NC 55 Bypass at Western Wake Freeway Westbound Ramps	FUTURE	To easily facilitate the installation of a proposed future signal into the Closed Loop System, coil up a minimum of 200 feet of spare cable in the vicinity of the proposed ramps.

05-1999	NC 55 Bypass at SR 1119 (Technology Drive)	Existing (Revise)	Revise the existing Traffic Signal at this intersection by installing closed loop system detectors & system interconnection equipment, to incorporate this traffic signal to the new Fiber Optic CLS #1. Provide a phone-drop at this master location.
05-1709	NC 55 at SR 1301 (Sunset Lake Road) / Old Smithfield Road	Existing (Revise)	Revise the existing Traffic Signal at this intersection, to accommodate the new 3-lane section of pavement on Old Smithfield Road. This includes installing a 2070L controller in a 170 cabinet, wood poles, closed loop system detectors & system interconnection equipment, to incorporate this traffic signal to the new Fiber Optic CLS #1.

CLOSED LOOP SIGNAL SYSTEM #2 – Old US 1			
Signal Inventory Number	**Intersection Description**	**Signal Status**	**Work Requirements**
05-2315	SR 1011 (Old US 1) at Western Wake Freeway Northbound Ramp	Proposed	Install a new, fully actuated Traffic Signal using custom designed metal poles with straight mastarms as the signal supports, and a 2070L controller in a 170 cabinet. Include this signal in the new “Old US 1 Closed Loop Signal System”.
05-2316	SR 1011 (Old US 1) at Western Wake Freeway Southbound Ramp	Proposed	Install a new, fully actuated Traffic Signal using custom designed metal poles with straight mastarms as the signal supports, and a 2070L controller in a 170 cabinet. Include this signal in the new “Old US 1 Closed Loop Signal System”. Provide a phone-drop at this master location.

TEMPORARY SIGNAL TO BE INSTALLED			
Signal Inventory Number	**Intersection Description**	**Signal Status**	**Work Requirements**
05-2326	SR 1163 (Kelly Road) at SR 1162 (Apex-Barbecue Road)	Temporary	Install a fully actuated Traffic Signal using wood poles as the signal supports, and a 2070L controller in a **pole-mounted** 170E cabinet. Signal shall be installed to accommodate detour traffic if Old US 1 is closed. After the Old US 1 work is completed, and the detour has been removed, , the intersection will be evaluated for 60 days by the NCDOT RTE and NCTA for the need to retain the temporary signal permanently. Based on the results of this evaluation, revise the temporary signal based on the new traffic needs and final geometry or remove the signal, as directed. Wood poles may remain.

SIGNAL TO BE ISOLATED			
Signal Inventory Number	**Intersection Description**	**Signal Status**	**Work Requirements**
05-2318	SR 1163 (Kelly Road) at US 64 EB Ramp	New	Install a new, fully actuated Traffic Signal using custom designed metal poles with straight mastarms as the signal supports, and a 2070L controller in a 170 cabinet.

SIGNALS TO BE REMOVED			
Signal Inventory Number	**Intersection Description**	**Signal Status**	**Work Requirements**
05-1886	US 64 at SR 1600 (Green Level Church Road)	Existing (Remove)	Remove the existing Traffic Signal at this intersection as determined by the Engineer. The Traffic Signal shall remain operational until the Kelly Road (SR1163) loops/ramps at US 64 are constructed and are operational.
05-1406	US 64 at SR 1163 (Kelly Road)	Existing (Remove)	Remove the existing Traffic Signal at this intersection as determined by the Engineer.

CLOSED LOOP SIGNAL SYSTEM #3 - Green Level Road			
Signal Inventory Number	**Intersection Description**	**Signal Status**	**Work Requirements**
05-2319	SR 1615 (Green Level Road) at Western Wake Freeway Northbound Ramps	New	Install a new, fully actuated Traffic Signal using custom designed metal poles with straight mastarms as the signal supports, and a 2070L controller in a 170 cabinet. Include this signal in the new "Green Level Road" Fiber Optic CLS. Provide a phone-drop at this master location.
05-2320	SR 1615 (Green Level Road) at Western Wake Freeway Southbound Ramps	New	Install a new, fully actuated Traffic Signal using custom designed metal poles with straight mastarms as the signal supports, and a 2070L controller in a 170 cabinet. Include this signal in the new "Green Level Road" Fiber Optic CLS.

SIGNALS TO BE INCLUDED IN THE CARY SIGNAL SYSTEM			
Signal Inventory Number	**Intersection Description**	**Signal Status**	**Work Requirements**
05-2200	NC 55 at Western Wake Freeway Northbound Ramps	Existing (Revise)	Revise the existing Traffic Signal at this intersection by installing custom designed metal poles with straight mastarms to accommodate final traffic pattern. Maintain this signal as part of the Cary Signal System.
05-2201	NC 55 at Western Wake Freeway Southbound Ramps	Existing (Revise)	Revise the existing Traffic Signal at this intersection by installing custom designed metal poles with straight mastarms to accommodate final traffic pattern. Maintain this signal as part of the Cary Signal System.

The Design-Build Team shall coordinate and implement the signal designs at the appropriate time as directed by the Engineer. The Town of Cary will install system timing plans for signals on the Town of Cary system. The Design-Build Team shall coordinate with the Town of Cary to obtain information regarding the Cary signal system. The Design-Build Team shall maintain, monitor, and adjust the signals, both traffic and pedestrian, as needed throughout the project The Design-Build Team shall also be responsible for the design and implementation of all **temporary signal designs** needed to maintain traffic during construction. **The Design-Build Team shall maintain full actuation of the traffic signals on this project during the life of the project.**

Traffic signal designs shall incorporate the use of 2070L equipment including base adapters, and custom designed metal poles with straight mastarms as the signal supports (unless otherwise noted). All final signal designs shall utilize inductive loop detection.

The Design-Build Team shall be responsible for providing the safest and most economical design for the public. The Design-Build Team shall be responsible for ensuring that all plans and designs conform to the current design standards of the Intelligent Transportation Systems & Signals Unit. All plans and associated design material and specifications must be reviewed and approved by NCDOT and NCTA before installation.

II. COMMUNICATIONS CABLE AND CONDUIT ROUTING PLANS

Overview

The Design-Build Team shall be responsible for routing Fiber Optic Communications Cable (24-fiber) to interconnect the traffic signals as described above.

The Design-Build Team shall be responsible for developing plans and installing the fiber optic communications cable. The Design-Build Team shall coordinate and implement the installation of the communications cable at the appropriate time as directed by the Engineer. As a minimum the communications cable shall be installed and made operational when the traffic signal controller cabinets are installed in their final location, and at a time when it is determined that the physical construction of the roadway will not cause damage to the communications cable.

100 feet of spare cable shall be stored on each side of the intersection, in the up stream and down stream run of the communications cable. Spare cable can be stored overhead on snow-shoes or underground in oversized heavy duty junction boxes.

The Design-Build Team shall be responsible for pursuing any necessary agreements with any railroad facility that the communications cable would traverse.

The Design-Build Team shall be responsible for providing the appropriate size and type of conduits for installation on bridge structures for routing the fiber optics communications cable. Conduit attached beneath bridge decks shall consist of a 4-inch steel outer-duct with 4 inner-ducts. Conduit ends must terminate in a junction box allowing for easy access.

Utility Make-Ready Plans

In conjunction with the development of the Communications Cable and Conduit Routing Plans and Traffic Signal Plans, the Design-Build Team shall also develop a set of **Utility Make-Ready Plans.** Utility Make Ready Plans shall adhere to the National Electrical Safety Code and be approved by all affected utility pole owners.

Communications Cable & Conduit Routing Plans, and Project Special Provisions

Prior to construction, the Design-Build Team shall provide a detailed set of Communications Cable & Conduit Routing Plans, and Project Special Provisions for NCTA and NCDOT's review and approval. No construction related to the installation of the communications system shall begin until NCTA and NCDOT has approved the plans and specifications.

The Communications Cable & Conduit Routing Plans, and Project Special Provisions shall consist of three major items listed below:

- Communications Cable & Conduit Routing Plans (with Cable Termination Plans)
- Project Special Provisions
- Catalog Cut Sheets

ENVIRONMENTAL PERMITS SCOPE OF WORK (3-17-08)

The NCTA has obtained the US Army Corps of Engineers Section 404 Permit and the NC Department of Natural Resources (DENR), Division of Water Quality (DWQ) Section 401 Water Quality Certification for the R-2635C portion of this project. This permit also includes a phased preliminary permit for the remainder of the project. This scope of work outlines the Design-Build Team's responsibilities related to the final permitting of the remainder of the project (R-2635A and R-2635B and any other areas not included in the permit obtained for R-2635C).

For the Design-Build Team's responsibilities regarding permit modifications to the existing permits for R-2635C, reference the Project Special Provision entitled "Permit Modifications" found elsewhere in this RFP.

General

The NCTA will not allow direct contact between the Design-Build Team and representatives of the environmental agencies either by phone, e-mail or in person, without representatives of the NCTA or the NCDOT Alternative Delivery Unit present. A representative from NCTA and the NCDOT Alternative Delivery Unit shall be included on all correspondence.

The Design-Build Team shall be responsible for preparing all documents necessary for the NCTA to obtain the final environmental permits for the construction requirements of the remainder of this project. Permit applications shall be required for the US Army Corps of Engineers Section 404 Permit, and the NC Department of Natural Resources (DENR), Division of Water Quality (DWQ) Section 401 Water Quality Certification. The Design-Build Team shall not begin ground-disturbing activities, including utility relocation, until all environmental permits have been issued for the remainder of the project. This constraint does not preclude construction already permitted under the R-2635C permit or investigative borings covered under a Nationwide Permit #6.

It is not anticipated that the Jordan Reservoir Buffer Rules will apply to this project. In the unlikely event that these buffer rules are imposed on the project, any additional work due to these buffer rules will be handled in accordance with Article 104-7 of the Standard Special Provisions, Division One, contained elsewhere in this RFP.

Concurrence Point 4A in the Merger 01 Process has been reached for R-2635A, B, and C. The Merger 01 Process is a coordination process used by NCDOT and the environmental agencies leading up to environmental permit application and acquisition for highway projects. Concurrence Point 4B has been reached for R-2635B and C. However, Concurrence Point 4B will be repeated for R-2635B based on the Design-Build Team's design. The Design-Build Team shall be responsible for conducting the Concurrence Point 4B and 4C meetings for R-2635A and B. Any variations in the NCTA's and/or NCDOT's proposed design and/or construction methods that nullify Concurrence Point 4A and/or require additional coordination with the environmental agencies shall be the sole responsibility of the Design-Build Team. The NCTA shall not allow any contract time extensions associated with this additional coordination.

The Design-Build Team shall follow the appropriate details in the document titled "Merger 01 Implementation Team – Merger 01 Process Information" which will be provided to the teams on the Reduced Candidates List.

Unless the Design-Build Team proposes earlier dates in their Technical Proposal, the NCTA will schedule the 4B and 4C meetings for December 2008 and March 2009, respectively. The Design-Build Team shall clearly identify in their Technical Proposal what months they would like the NCTA to schedule these meetings. Failure on the part of the Design-Build Team to meet the dates above, or earlier dates as identified in their Technical Proposal, places all responsibility for associated delays solely on the Design-Build Team.

The Design-Build Team shall be bound by the terms of all signed planning documents and approved minutes and commitments of all concurrence meetings and shall be held accountable for meeting all permit conditions. The Design-Build Team shall be required to staff any personnel the Design-Build Team deems necessary to provide permit compliance.

Major Permit Application Process

It shall be the Design-Build Team's responsibility to acquire information and prepare permit drawings that reflect the impacts and minimization efforts resulting from the Merger 01 Process and as designed by the Design-Build Team. Further it shall be the Design-Build Team's responsibility to provide these permit impact sheets (drawings) depicting the design and construction details to the NCTA as part of the permit application. The Design-Build Team shall be responsible for developing the permit application for all jurisdictional impacts. The permit application shall include all utility relocations. The permit application shall consist of, at a minimum, the following:

- Cover Letter
- Minutes from the 4B and 4C meetings
- Permit drawings
- Half-size plans
- Completed forms (Section 404, etc.) appropriate for impacts

In addition to the above, the Design-Build Team shall provide an electronic package of the 401 Certification application and drawings to DWQ concurrent with the paper copies. Guidance for preparing these electronic documents will be provided by the NCTA.

Direct coordination between the Design-Build Team, the NCDOT's State Alternative Delivery Engineer, NCTA and the NCDOT Office of Natural Environment (PDEA-NEU) shall be necessary to ensure proper permit application development. Upon completion of the permit application package, the Design-Build Team shall concurrently forward the package to the NCTA and the State Alternative Delivery Engineer for review and approval. The NCTA will subsequently forward the package to the appropriate agencies to have the permit application placed on public notice.

The Design-Build Team shall submit one permit application for the remainder of the project. The Design-Build Team shall not submit multiple applications to develop a "staged permitting" process to expedite construction activities in a phased fashion.

Any temporary construction measures, including de-watering, construction access, etc. shall be addressed in the permit application. Impacts that result from so-called temporary measures may not be judged to be temporary impacts by the agencies. These issues must be addressed and reviewed by NCTA prior to the 4B and 4C meetings and resolved with the agencies during the 4B and 4C meetings.

The Design-Build Team shall clearly indicate the location of and impacts of haul roads and utility relocations on jurisdictional areas. The Design-Build Team shall identify all proposed borrow and waste sites. These details shall be included in the permit application data. Further, the Design-Build Team shall describe the methods of construction of all structures. The description of the temporary impacts (haul roads, utility relocations, work bridges, etc.) shall include restoration plans, schedules, and disposal plans. This information shall be included in the permit application. This information shall also be part of the data presented at the 4B and 4C meetings.

The NCTA hereby commits to ensuring, to the greatest extent possible, that the footprint of the impacts in areas under the jurisdiction of the federal Clean Water Act shall not be increased during the Design-Build effort. All fill material shall be immediately stabilized and maintained to prevent sediment from entering adjacent waters or wetlands. The Design-Build Team shall be responsible for ensuring that the design and construction of the project will not impair the movement of aquatic life.

Requests made for modifications to the permits obtained by the Design-Build Team shall only be allowed if the Engineer determines it to be in the best interest of the NCTA and shall be strongly discouraged. The Design-Build Team shall not take an iterative approach to hydraulic design issues. The design shall be complete prior to permit application.

Major Permit Timeframe

The Design-Build Team should expect it to take up to 11 months to accurately and adequately complete all designs necessary for permit application, submit the permit application request and obtain approval for the permits from the environmental agencies. Agency review time will be approximately 90 days from receipt of a "complete" package. No requests for additional contract time or compensation shall be allowed if the permits are obtained within this 11-month period. With the exception of location and survey work, no mobilization of men, materials, or equipment for site investigation or construction of the R-2635A and R-2635B portions of the project shall occur prior to obtaining the permits, either within the 11-month period or beyond the 11-month period. This limitation does not preclude the off-site fabrication of bridge members or equipment. The NCTA will not honor any requests for additional contract time or compensation, including idle equipment or mobilization or demobilization costs, for the Design-Build Team mobilizing men, materials (or ordering materials), or equipment prior to obtaining all permits. The NCTA will consider requests for contract time extensions for obtaining the

permits only if the Design-Build Team has pursued the work with due diligence, the delay is beyond the Team's control, and the 11-month period has been exceeded. If time were granted, it would be only for that time exceeding the 11-month period. This 11-month period is considered to begin on the date of Notice to Proceed.

The Design-Build Team needs to be aware that the timeframes listed above to review any permit applications and/or modifications begin only after a fully complete and 100% accurate submittal.

Mitigation Responsibilities of the Design-Build Team

The NCTA will be responsible for compensatory mitigation for unavoidable impacts to wetlands and surface waters due to project construction from the North Carolina Ecosystem Enhancement Program to the extent denoted in the EEP acceptance letter dated July 18, 2007.

Any changes proposed by the Design-Build Team to any design or construction details provided by the NCTA or NCDOT shall be approved by the NCTA prior to being submitted to the environmental regulatory and resource agencies for their approval. Should additional jurisdictional impacts result from revised design/construction details, suitable compensatory mitigation for wetlands and/or streams shall be the sole responsibility of the Design-Build Team. Therefore, it is important to note that additional mitigation shall be approved by the agencies and such approval shall require, at a minimum, the preparation and approval of a mitigation plan before permits are approved <u>and</u> before construction shall commence.

The Design-Build Team shall analyze all new areas to be impacted that have not been analyzed during the NEPA process and preparation of permit applications. This analysis shall include performing all environmental assessments. These assessments shall require the Design-Build Team to engage the services of a competent environmental consultant to conduct a full environmental investigation to include, but not be limited to, Federally Listed Threatened and Endangered Species, wetlands, streams, avoidance and minimization in jurisdictional areas, Rapanos forms, compensatory mitigation, FEMA compliance, and historical, archaeological, and cultural resources surveys in these areas. The environmental consultant shall obtain concurrence through NCDOT from the United States Fish and Wildlife Service to document compliance with Section 7 of the *Endangered Species Act* for those species requiring such concurrence. In addition, the Design-Build Team shall identify additional mitigation required; identify the amount of time the modification will take beyond the 11-month period; and fulfill any other regulatory agencies' requirements to obtain the permit. Any contract extensions resulting from additional environmental assessments required by the Design-Build Team's design and/or construction details impacting areas outside those previously analyzed through the NEPA Process shall be solely at the NCTA's discretion.

If any staging areas are located outside the project right-of-way, the Design-Build Team shall engage the services of a competent environmental consultant to conduct a full environmental investigation to include, but not be limited to, Federally Listed Threatened and Endangered Species, wetlands, streams, avoidance and minimization in jurisdictional areas, compensatory mitigation, FEMA compliance, and historical, archaeological, and cultural resources surveys in these areas.

Commitments

The NCTA is committed to incorporating all reasonable and practicable design features to avoid and minimize wetland impacts and to provide full compensatory mitigation of all wetland impacts denoted in the EEP acceptance letter dated July 18, 2007. Avoidance measures were taken during the planning and NEPA Process and minimization measures were incorporated as part of the project's preliminary design. The Design-Build Team shall incorporate these avoidance and minimization features, plus any minimization identified during the interagency meeting, into the design.

All work by the Design-Build Team shall be accomplished in strict compliance with the plans submitted with the Section 404 and 401 permit applications and in compliance with all conditions of all permits and certifications issued by the agencies. The Design-Build Team shall provide each of its contractors and/or agents associated with the construction or maintenance of this project with a copy of the permits.

As a condition of the 401 permit, where construction of the project requires draining of any ponds, the Design-Build Team shall develop a Pond Drainage Plan and submit to the NCTA and the environmental regulatory agencies for approval to include but not limited to size, past use, and control structure of the pond; classification and flow of the receiving waters; procedures and rate of water drawdown; water quality monitoring procedures; and any plant or wildlife species concerns or considerations.

Unless noted otherwise elsewhere in this RFP, the Design-Build Team shall strictly adhere to these commitments, as well as others, including but not limited to, those included in the planning documents, all permits and interagency meetings.

Archeological Sites

If the Design-Build Team discovers any previously unknown historic or archeological remains while accomplishing the authorized work, they shall immediately notify the NCTA and NCDOT Staff Archaeologist who will initiate the required State/Federal coordination. A representative from the NCOT Alternative Delivery Unit shall also be notified. All questions regarding these sites shall be addressed to Mr. Matthew Wilkerson, NCDOT PDEA Human Environment Unit, Archaeology Section.

RAILROAD COORDINATION SCOPE OF WORK (04-15-08)

Unless a distinction is made, it is the NCTA's intention that whenever this scope of work references "Railroad" this would be synonymous with CSX Transportation. The Design-Build Team shall be responsible for coordinating all Railroad design and construction details on Railroad right of way, including protection and adjustments to existing and proposed railroad crossing surface and roadbeds, as needed. Coordination shall include any necessary agreements required by the NCTA, NCDOT and / or Railroad. The Design-Build Team shall be responsible for all Railroad costs associated with this project to include, but not be limited to, design review, crossing surfaces, track materials, insurance, flagging, and impacts to existing at-grade crossings, signals, gates, and other appurtenances. CSXT will be responsible for tying the new trackwork to the existing track, including all materials for said work. The requirements herein govern over the second paragraph of Article 107-9 of the Standard Special Provision, Division One contained elsewhere in this RFP.

Coordinate with any utility owners within the Railroad right of way and accommodate such utilities during the bridge design and track work detailed herein.

The Design-Build Team shall be responsible for making application, securing, obtaining and associated fees for any permits for the conduit installation within the railroad right of way. The permits shall be obtained in the NCTA's name. NCTA shall be responsible for any reoccurring annual fees that may be associated with such conduit installation.

Preparation for Construction within the Existing Railroad Right of Way

I. The Design-Build Team shall be required to use the following guidelines and any other guidelines as required by the Railroad.

(A) *AREMA Manual for Railroad Engineering*
(B) *CSX Public Project Information dated 5/4/2007 with updated CSXT Criteria for Overhead Bridges dated 9/14/07*
(C) *Federal Aid Policy Guide 23 CFR 140I*
(D) *Federal Aid Policy Guide 23 CFR 646*
(E) *NCDOT Construction Manual*
(F) Article 107-9 of the Standard Special Provision, Division One, contained elsewhere in this RFP (excluding the second paragraph)
(G) *North Carolina Administrative Code* Section T19A: 02B, 0153 through 0159
(H) *CSX Transportation Special Provisions for Protection of Railway Interest*
(I) *CSX Design and Construction Standard Specifications*

II. The Design-Build Team shall be responsible for verifying the number of trains per day and maximum speed allowed.

Arrangements for Protection and Adjustments to Existing and Proposed Railroad Crossing Surface and Roadbeds:

I. The Design-Build Team shall make the necessary arrangements with the Railroad for the installation of new grade crossing surfaces, (permanent and temporary construction crossing), removal of temporary construction crossing after completion of project, shoring plans, encroachment agreements, and railroad force account estimates and agreements. All permanent crossing surfaces shall be concrete, both field and gauge. The Design-Build Team shall not commence any work on the Railroad right of way until all agreements have been executed, insurance acquired and approved, and all construction plans have been approved by the Railroad. The Design-Build Team shall make the necessary arrangements with the Railroad that are required to protect against property damage that may result in loss of service, expense, or life. The Design-Build Team shall be responsible for all damage to the Railroad resulting from their operations and the Railroad may issue a stop order until all dangerous situations are remedied. The Design-Build Team shall be responsible for providing Railroad Protective Liability Insurance for Bodily Injury Liability, Property Damage Liability, and Physical Damage to Property in the amount of **$5,000,000** Per Occurrence for freight rail and / or **$10,000,000** for passenger rail. The Design-Build Team shall obtain **$5,000,000** in Aggregate coverage for freight and / or **$10,000,000** for passenger Per Annual. The Design-Build Team shall be responsible for verifying and obtaining the appropriate insurance and / or coverage with the Railroad. Other insurance requirements, including those for all subcontractors, is detailed in the standard CSX Transportation Railroad Agreement provided to the short-listed teams.

II. The NCDOT and NCTA have a preliminary engineering agreement with CSXT. After award of the Contract, the Design-Build Team will be responsible for coordinating and obtaining a new preliminary engineering agreement prior to any review of project documents. The Design-Build Team will also be responsible for obtaining the construction agreement with CSXT. The Design-Build Team shall be required to use the Standard NCDOT Cost Agreement and Insurance Special Provision forms that will be supplied by the NCDOT Utility Unit Railroad Section upon request.

III. After negotiations between the Design-Build Team and the Railroad have been finalized, the Design-Build Team shall submit agreements executed by CSX and final plans approved by CSX to NCTA's Chief Engineer for plan approval and final agreement execution by NCTA and/or NCDOT, prior to authorizing railroad work. After approval by NCTA and/or NCDOT, one copy of the executed agreement will be returned to the Design-Build Team and one copy forwarded to the Engineer, prior to any construction work by the Design-Build Team or Railroad.

Coordination with CSX Transportation:

The Design-Build Team shall coordinate with Shelby L. Stevenson, Principal Engineer - Public Projects, CSX Transportation, 500 Water Street (J-301), Jacksonville, Florida 32202, (904) 359-1177. Contact with the railroad shall be made through CSX Transportation's General Engineering Consultant (GEC), DMJM HARRIS. The contact for DMJM HARRIS is Jeffery A. Konrad, PE, The Atlantic Building, 260 South Broad Street, Suite 1500, Philadelphia, PA 19102, (215) 735-0832. Mr. Konrad will be the contact for obtaining plan approval and a partially executed legal agreement with CSX Transportation, the NCTA, and the NCDOT Department of Transportation as the parties in the agreement for overhead bridges crossing CSX Transportation in the vicinity of US 1. The NCTA and NCDOT will review the agreement prior to submittal to the Railroad. The NCTA and NCDOT will execute and distribute the Agreement within 14 calendar days of receipt. The agreement shall include necessary Force Account items such as preliminary engineering, construction engineering, flagging, and signal and communication lines. The NCTA will be responsible for payment of the Railroad Force Account work; however, the Design-Build Team shall reimburse the NCTA for these costs including any Force Account estimate overruns. This reimbursement shall be incidental to the lump sum price bid for the project. Upon request, the NCTA will provide copies of the railroad's invoices to the Design-Build Team for review. The Design-Build Team shall have ten (10) days to provide comments to the NCTA, after which the NCTA will pay the invoice. The Design-Build Team shall be responsible for maintaining records to verify the invoice items.

The preliminary plan submittal to the Railroad shall include bridge plans, preliminary trackwork plans, the Railroad's "Overhead Bridge Crossing Data," appropriate roadway plan sheets showing impacts to the Railroad's right of way, erosion control plans, temporay shoring and drainage calculations for any drainage on or across the Railroad's right of way. A minimum of five **(5)** half-size sets of preliminary plans and data shall be submitted to DMJM HARRIS on behalf of CSX Transportation through the NCTA. If the Railroad requires RFC's and / or final plans, then **five (5)** half size sets shall be provided to the Railroad. If any re-submittals of plans or any additional information is required, **five (5)** half size sets shall be submitted to the Railroad. Working Drawings affecting the Railroad's operations and / or right of way shall follow submittal process as outlined in the *Standard Specifications for Roads and Structures* or Special Provisions.

Upon completion of the CSX Transportation structure, the Design-Build Team shall submit coordinately correct as-built drawings and details to NCTA and CSX Transportation. Additionally, five (5) half size hard copies of the as-built plans shall be submitted to the Railroad.

EROSION AND SEDIMENTATION CONTROL SCOPE OF WORK (04-16-08)

Authority

The NCTA is currently operating under the NCDOT's delegated authority with the North Carolina Sedimentation Control Commission. Under this arrangement, the NCDOT Roadside Environmental Unit (REU) has the authority to (1) identify special needs for this project, including the acquisition of additional right-of-way; (2) mandate special details to be included in the design plans or special provisions; (3) conduct on site plan reviews for compliance and require design changes to accommodate field changes; (4) inspect all construction sites including waste and borrow pits and haul roads; and (5) issue violation notifications or cease and desist orders. The NCDOT REU will also retain authority in plan, detail, and special provision review and acceptance.

General

The NCTA and NCDOT REU shall review and accept all Erosion and Sedimentation Control Plans. Clearing & Grubbing and Final Grade Release for Construction (RFC) Erosion Control Plans shall be submitted to all NCTA and NCDOT Personnel listed in the Design-Build Submittal Guidelines before **any** land disturbing activities, including clearing and grubbing, can commence. If the Design-Build Team chooses to perform the work in discrete sections, then a complete set of Clearing & Grubbing and Final Grade RFC Erosion Control Plans shall be submitted, accepted, and distributed as noted above prior to land disturbing activities, including clearing and grubbing, commencing in that section. No land disturbing activities, including clearing and grubbing, shall occur in any location that does not have accepted Clearing & Grubbing and Final Grade RFC Erosion Control Plans.

Erosion and Sedimentation Control Plans shall at a minimum address the following:

I. Complete Set of Plans

A. Clearing and Grubbing Phase

1. Use correct NCDOT symbology.
2. Protect existing drainage structure inlets with Rock Inlet Sediment Trap Type 'A' (RIST-A), Rock Inlet Sediment Trap Type 'C' (RIST-C), Rock Pipe Inlet Sediment Trap Type 'A' (PIST-A), etc.
3. Utilize adequate perimeter controls (temporary silt ditches [TSD], temporary silt fence [TSF], etc.)
4. Utilize skimmer basins and rock measures with sediment control stone at drainage outlets (Temporary Rock Sediment Dam Type 'B' [TRSD-B], Temporary Rock Silt Check Type 'A' [TRSC-A], etc.)
5. Take into account existing topography and show contour lines.
6. Show 50-foot Environmentally Sensitive Area (ESA) around all jurisdictional streams on Clearing & Grubbing EC Plan only.

7. Include and culvert and/or pipe construction sequence plan sheets in Clearing and Grubbing Erosion Control Plans; all pipes 48" or larger, or any combination of pipes that total 48" or more require a construction sequence. Prior to installation of pipes smaller than 48 inches in jurisdictional areas, the Design Build Team shall submit a phasing plan for managing the watercourse to the NCTA for review and acceptance. The phasing plan shall be in accordance with the NCDOT Best Management Practices for Construction and Maintenance Activities.
8. Utilize Temporary Rock Silt Checks Type 'B' (TRSC-B) to reduce velocity in existing ditches with spacing of 250 feet divided by percentage of ditch grade. Also utilize TRSC-Bs in proposed TSDs and temporary diversions (TD).
9. Protect existing streams and aquatic resources; do not place erosion control devices directly in streams.
10. Provide adequate silt storage for 3600 cubic feet per disturbed acre and sediment basins shall be sized with surface area equal to 435 square feet per cubic foot per second (cfs) of the peak inflow rate, Q25, using 25-year peak rainfall data *(NCDENR- Erosion and Sediment Control Planning and Design Manual*). A Sediment Basin Designer Spreadsheet will be provided by the NCDOT Roadside Environmental Unit (REU) upon request.
11. Design Riser Basins to the following standards:
    a. Surface Area shall be determined by Equation A (sq. feet.) = Q25 (cfs) * 435.6.
    b. Volume requirement shall be 1800 cubic feet per disturbed acre draining to the riser basin.
    c. Riser Pipe shall have a cross-sectional area 1.5 times that of the barrel pipe.
    d. Perforations in the riser pipe shall be reduced to increase dewatering time to twenty-four (24) hours.
    e. See *NCDENR- Erosion and Sediment Control Planning and Design Manual* for additional design criteria.
12. Skimmer Basins shall provide adequate silt storage for 1800 cubic feet per disturbed acre with surface area equal to 325 square feet per cubic foot per second (cfs) of the peak inflow rate, Q25, using the 25-year peak rainfall data (*NCDENR - Erosion and Sediment Control Planning and Design Manual*). A Sediment Basin Designer Spreadsheet will be provided by the NCDOT Roadside Environmental Unit (REU) upon request.
13. The minimum and maximum length to width ratio of all Sediment Basins shall be 2:1 and 6:1, respectively.
14. Coir Fiber Baffles shall be installed in all silt basins and sediment dams at drainage outlets. For silt basins with a 20-foot or longer length, three Coir Fiber Baffles shall be installed with a spacing of 1/4 the basin length. For silt basins with a length less than 20 feet, a minimum of two Coir Fiber baffles shall be installed, with a spacing of 1/3 the basin length. The exception to the baffle spacing requirement shall be the spacing provided in an erosion control device detail (i.e. Tiered Skimmer Basin). The Design-Build Team will not be required to show the individual baffles on the Erosion Control Plans, but will be required to incorporate the Coir Fiber Baffle Detail on the Erosion Control Plans.

B. Final Grade Phase

1. Use correct NCDOT symbology.
2. Protect existing and proposed drainage structure inlets with RIST-A, RIST-C, PIST-A, etc.
3. Utilize adequate perimeter controls (TSD, TSF, etc.).
4. Utilize TRSC-Bs to reduce velocity in existing and proposed ditches with spacing of 250 feet divided by percentage of ditch grade. Also utilize TRSC-Bs in proposed TSDs and TDs.
5. Utilize temporary slope drains and earth berms at top of fill slopes 8 feet or higher and a fill slope grade of 3:1 or steeper, or where there are superelevations above 0.04 and fills are greater than 5 feet. Maximum slope drain spacing shall be 200 feet.
6. Utilize rock energy dissipater and / or silt basin at outlet of slope drain.
7. Devices at all drainage turnouts shall utilize skimmers or sediment control stone (TRSD-B, TRSC-A, etc.)
8. Provide adequate silt storage for 3600 cubic feet per disturbed acre and sediment basins shall be sized with surface area equal to 435 square feet per cubic foot per second (cfs) of the peak inflow rate, Q25, using 25-year peak rainfall data *(NCDENR-Erosion and Sediment Control Planning and Design Manual*). A Sediment Basin Designer Spreadsheet will be provided by NCDOT REU upon request.
9. Provide matting for erosion control in all ditch lines where Shear Stress is greater than 0.15 psf, but less than or equal to 1.55 psf. For ditch lines with a Shear Stress above 1.55 psf, Permanent Soil Reinforcement Mat or Rip Rap shall be utilized.
10. Design Riser Basins to the following standards:
    a. Surface Area shall be determined by Equation A (sq. feet.) = Q25 (cfs) * 435.6.
    b. Volume requirement shall be 1800 cubic feet per disturbed acre draining to the riser basin
    c. Riser Pipe shall have a cross-sectional area 1.5 times that of the barrel pipe.
    d. Perforations in the riser pipe shall be reduced to increase dewatering time to twenty-four (24) hours.
    e. See *NCDENR- Erosion and Sediment Control Planning and Design Manual* for additional design criteria.
11. Skimmer Basins shall provide adequate silt storage for 1800 cubic feet per disturbed acre with surface area equal to 325 square feet per cubic foot per second (cfs) of the peak inflow rate, Q25, using the 25-year peak rainfall data (*NCDENR - Erosion and Sediment Control Planning and Design Manual*). A Sediment Basin Designer Spreadsheet will be provided by the NCDOT Roadside Environmental Unit (REU) upon request.
12. The minimum and maximum length to width ratio of all Sediment Basins shall be 2:1 and 6:1, respectively.
13. Coir Fiber Baffles shall be installed in all silt basins and sediment dams at drainage outlets. For silt basins with a 20-foot or longer length, three Coir Fiber Baffles shall be installed with a spacing of 1/4 the basin length. For silt basins with a length less than 20 feet, a minimum of two Coir Fiber baffles shall be installed, with a spacing of 1/3 the basin length. The exception to the baffle spacing requirement shall be the spacing provided in an erosion control device detail (i.e. Tiered Skimmer Basin). The

Design-Build Team will not be required to show the individual baffles on the Erosion Control Plans, but will be required to incorporate the Coir Fiber Baffle Detail on the Erosion Control Plans.

C. Intermediate Phase

Intermediate Erosion Control Plans shall only be required if design modifications and / or site conditions require additional erosion control design or design revisions to the RFC Clearing and Grubbing and / or RFC Final Grade Erosion Control Plans. Intermediate Plans shall be submitted for review and shall be accepted prior to construction of any aspect impacted by the revised erosion control design. For any intermediate phase, comply with Section B, "Final Grade Phase" above.

II. Detail Sheets and Notes

A. Provide project specific special notes and details such as temporary rock silt check type B, coir fiber baffle, skimmer basin, etc.
B. Provide matting summary sheet(s): matting for erosion control and permanent soil reinforcement mat.
C. Provide reforestation sheet(s): regular, wetland, streambank showing appropriate species.

III. Title Sheet

A. Show correct notes: HQW, ESA, clearing and grubbing, etc.
B. Show correct standards for project.
C. List of standard NCDOT symbology.

IV. Special Provisions

A. Erosion Control Special Provisions are available at the following website: **http://www.ncdot.org/doh/operations/dp_chief_eng/roadside/soil_water/special_provisions/**
B. References in Erosion Control Special Provisions from the aforementioned website to Method of Measurement, Basis of Payment, or any other statement regarding direct payment for Erosion & Sediment Control measures shall be disregarded.
C. Erosion Control / Stormwater Certification found elsewhere in this RFP.

V. Miscellaneous

A. Plan submittals shall include all pertinent design information required for review, such as design calculations, drainage areas, etc.
B. The NCDOT REU will provide a sample set of Erosion and Sedimentation Control Plans (including any special details or special provisions used by the NCDOT REU) and MicroStation Erosion Control Workspace to the Design-Build Team for reference upon request.
C. Plans shall address any environmental issues raised during the permitting process.
D. Sufficient time shall be allowed for the Design-Build Team to make any changes to the Erosion and Sedimentation Control Plans deemed necessary by the NCDOT REU.

E. Temporary access and haul roads, other than public roads, constructed or used in connection with the project shall be considered a part of the project and addressed in the Erosion and Sedimentation Control Plans.
F. Borrow or waste areas that are part of the project shall require a separate Erosion and Sedimentation Control plan, unless the borrow or waste activity is regulated under the *Mining Act of 1971*, or is a landfill regulated by the Division of Solid Waste Management (DSWM). The Design-Build Team shall submit the permit number for waste / borrow sites covered by the Mining Act or regulated by DSWM (DENR) concurrently to NCTA and the State Alternative Delivery Engineer.
G. Whenever NCTA or NCDOT determines that significant erosion and sedimentation continues despite the installation of approved protective practices, the Design-Build Team shall be required to and shall take additional protective action.
H. An accepted Erosion and Sedimentation Control Plan does not exempt the Design-Build Team from making every effort to contain sediment onsite.
I. Any Erosion Control Design revisions made during the construction of the project shall be submitted to NCDOT REU by the 15th of the month via the State Alternative Delivery Engineer. At anytime requested by NCTA, the State Alternative Delivery Engineer or the Roadside Environmental Unit, the Design-Build Team shall provide an updated version of the Erosion and Sedimentation Control Plans for distribution to all parties involved in the construction process.
J. The Design-Build Team shall comply with the *North Carolina Administrative Code Title 15 A Department of Environment and Natural Resources Chapter 4, Sediment Control*.
K. A pre-design meeting shall take place between the NCTA, NCDOT REU Soil & Water Engineering Section, the Design Build Team, and any other pertinent NCDOT personnel before Erosion and Sedimentation Control Design begins. Erosion and Sedimentation Control Plan submittals shall only be reviewed and accepted by NCTA and NCDOT REU after the Erosion Control Pre-Design Meeting.
L. All RFC Erosion and Sedimentation Control Plans, including any red line revisions, shall be kept on site at all times throughout the duration of the project.
M. Erosion Control / Stormwater Certification shall be required according to the Project Special Provision found elsewhere in this RFP.
N. Prior to installation of any erosion control devices, the Design-Build Team shall verify all jurisdictional area boundaries and delineate the boundaries with Safety Fence.

ENVIRONMENTAL INCENTIVES:

The Design-Build Team shall observe and comply with Federal and State Laws; Local Laws, Ordinances and Regulations; as well as Orders and Decrees of Bodies having any jurisdiction or authority in accordance with Section 107 of the Standard Specifications.

The Design-Build Team will be eligible for an incentive in the amount of $150,000 if construction operations have been performed in accordance with all environmental regulations and the Specifications, and no violations have been issued. Violations are defined as:

Violation	Issuing Agency
Immediate Corrective Action (ICA)	NCTA or NCDOT
Continuance of an ICA (CICA)	NCTA or NCDOT
Notice of Violation (NOV)	Regulatory Agencies
Cease and Desist (C&D)	Corps of Engineers

The entire incentive payment shall be paid at the completion of the project as long as the Design-Build Team does not receive any violations at any time during project construction.

EROSION CONTROL LIQUIDATED DAMAGES:

If the Design-Build Team receives an NOV or C&D, the entire incentive will be forfeited by the Design-Build Team. For each ICA or CICA received, the incentive will be reduced by $50,000. In the event that any combination of violations results in the forfeiture of the entire $150,000 incentive, and the Design-Build Team receives subsequent violations, then the Design-Build Team will be assessed liquidated damages for each violation, regardless of type, in the amount of $12,500.

The Design-Build Team shall take all reasonable precautions to comply with all regulations of all authorities having jurisdiction over public and private land governing the protection of erosion and sedimentation. Any fines, remediation required or charges levied against NCTA and/or NCDOT for failing to comply with all rules and regulations concerning erosion and sediment control, due to the Design-Build Team's negligence, carelessness, or failure to implement the erosion and sediment control plan and specifications; or failure to maintain an approved Storm Water Pollution Prevention Plan (SWPPP), regardless of absence of neglect, shall be deducted from monies due the Design-Build Team. In addition to said fines, remediation required, or charges levied, any associated engineering costs or actions taken by NCTA and/or NCDOT in order for NCTA and/or NCDOT to comply with rules and regulations, as a result of the Design-Build Team's negligence, carelessness, or failure to implement the Erosion and Sediment Control Plans and Specifications; and / or the SWPPP, regardless of absence of neglect, shall be deducted from the monies due to the Design-Build Team.

OPEN ROAD TOLLING (ORT) INFRASTRUCTURE SCOPE OF WORK (04-09-08)

This ORT Infrastructure scope of work includes design, engineering, fabrication, delivery and erection of gantries, toll facility buildings, pavements, sidewalks, electrical work, heat ventilation, air conditioning (HVAC) work, plumbing work, conduit duct banks and associated vaults and equipment cabinets necessary for the infrastructure of the open road tolling system. The design, fabrication and installation of DMS message boards, toll equipment brackets and toll system integration will be by others in coordination with this contract.

The Design-Build Team shall coordinate with the Toll System Integrator in the final design and construction of the ORT Infrastructure to readily accommodate the NCTA selected Toll System Integrator components without the need for modifications and to achieve the NCTA tolling performance requirements. Some information contained within this ORT Infrastructure scope is typical and may not be applicable for the specific tolling system provided by the Toll System Integrator selected by NCTA. Therefore, reduction, deletion or addition of items indicated within this scope, if allowed and necessary, shall result in compensation adjustments in accordance with the 2006 NCDOT Standard Specifications for Roads and Structures.

References

Design and construct ORT Facilities, included herein, in accordance with the following:

- Aesthetic Design Guidelines, dated September 28, 2007
- Aesthetic Design Scope of Work
- Signing Scope of Work
- Typical Open Road Tolling (ORT) Facility Guidelines

General

Design, drawings, details, and specifications detailed within this scope are the responsibility of the Design-Build Team, unless noted otherwise. Provide all details and plans consistent with industry standards and professional requirements.

ORT Site Location

Locate each tolling site in accordance with the ORT Site Geometry Design Criteria below and generally at the locations indicated on the ORT Collection Facility Layout Drawing. Accommodate the lane configurations and shoulder widths detailed in the ORT Collection Facility Layout Drawings provided by the NCTA. Place tolling locations to allow optimum performance of the tolling system and for ease of maintenance access under operating conditions.

ORT Site Pavement Design

Install pavement at the ORT sites consistent with the adjacent pavement and shoulders, except as noted herein. The ORT site limits are defined as the pavement beginning 60 feet prior to the first ORT gantry span and extending through and a length of 90 feet beyond the second ORT gantry span.

Concrete pavement may be installed within the ORT tolling site subject to the following:

- Do not install steel reinforcement, steel dowel bars, steel tie-bars, steel mesh reinforcement or steel embedment in the pavement.
- Do not install electro-magnetic field emitting wiring/cabling within the pavement.
- Do not install top conduit duct banks within 12 inches of top of subgrade.

Adjust concrete pavement transverse and longitudinal joint layout to accommodate toll system integrator loop layout; however, do not exceed 22 feet between any two transverse joints.

ORT Site Geometry Design Criteria

To optimize the performance and operation of the electronic tolling and video enforcement equipment, the following roadway design criteria is required at each ORT site:

<u>Mainline ORT Sites:</u>

- Tangent roadway section minimum of 200 feet in length.
- Pavement cross slope 4% maximum
- 2% is preferred
- Consult with NCTA for any slopes greater than 4%.
- At grade roadway section preferred; avoid structures.
- Section in which uniform vehicle speeds above 45 mph are expected
- Constant roadway lane widths, (i.e. not merge or diverge roadway sections)
- Support horizontal and vertical alignment for unobstructed driver vision of the tolling point

<u>Ramp ORT Tolling Sites:</u>

- Tangent roadway section minimum of 200 feet in length where possible. Note that loop ramps should be designed with maximum radius possible, taking into consideration right of way constraints and interchange geometry.
- Mid-point of ORT Site not less than 350 feet from pavement gore point at exit and entry ramps. Pavement gore point is the intersection of the right outside edge of mainline shoulder and the left outside edge of ramp shoulder.
- Gantries shall be located between one-third and one-half of the ramp length as measured from the mainline end of ramp. Do not locate sites near the side road intersections.
- Pavement cross slope or super-elevation shall not exceed maximum design for curves; 2% is preferred in tangent sections.
- At grade roadway section preferred; avoid locating over or under structures.
- Location where uniform vehicle speeds above 45 mph are expected, but not less than 30 mph.
- Constant roadway lane widths, (i.e. not merge or diverge roadway sections)
- Support horizontal and vertical alignment for unobstructed driver vision of the roadway.

Locate ORT sites free from electromagnetic conditions such as proximity to large power sources or communication towers. Notify NCTA when such conditions may be a concern. A

RF Spectrum analysis for the site may be required by the Design-Build Team prior to approval of sites with electromagnetic field interference.

ORT Gantry

Design, engineer, fabricate, transport and erect watertight gantry structures to which the NCTA selected Toll System Integrator will attach the monitors, antennae, sensors and other tolling equipment. Design Gantries in compliance with the *Standard Specifications for Structural Supports for Highway Signs, Luminaires and Traffic Signals*, as published by AASHTO using a minimum wind speed of 90 miles per hour. Reference the Signing Scope of Work for applicable sizes and loads for DMS boards.

The Typical Open Road Tolling (ORT) Facility Guidelines drawings depict typical equipment anticipated on the gantry structures, as follows:

Each Travel Lane	**Each Shoulder**
4 transponder antennae	2 transponder antennae
2 violation enforcement systems (lights and cameras)	1 violation enforcement system (lights and camera)
1 laser profiler	

Additional equipment, controllers or control boxes may be required to be supported on the gantries to operate the toll integration system. Coordinate with the NCTA selected Toll System Integrator for final toll gantry loading and design. Additionally, design each gantry primary member for 50 lb/ft. uniform static vertical loading. Include effect of proposed future widening in load analysis. Add 25% additional loading to the total toll equipment loading requirements for future expansion of tolling system. Provide structure analysis and loading requirements with design submittal.

Provide two structural gantries at each ORT site, to be similar in appearance and scale. Design each gantry to span the facility width as indicated on the ORT Collection Facility Layout. The linear distance along the roadway between the two gantry structures is approximately 50 feet. However, this distance is dependent upon final toll system integration design. Design gantry cross members to ensure that the line of sight for cameras, camera lights, and overhead profilers/separators are not obstructed by the structure.

Design and construct gantry structure including scale, materials, color and finish aesthetically consistent with the Aesthetic Design Guidelines, dated September 28, 2007. The front façade or paneling of the gantry shall conceal all ORT tolling equipment and cabling from on-coming traffic and should present a straight and clean visual appearance, which is not detracted from by tolling equipment. Install gantry façade consisting of Zinc Cladding, VM Zinc or approved equal. Design metal wall panel assembly, including comprehensive engineering analysis by a qualified professional engineer and account for the vibration caused during operation. Provide factory-formed metal wall panels designed to be field assembled by lapping and interconnecting side edges of adjacent panels and mechanically attaching through panel to supports using concealed fasteners in side laps. Provide all required

miscellaneous framing, sub-girts, z-clips and hat channels. All framing material shall be galvanized. All fasteners shall be 316L stainless steel. Panels shall be a minimum of 18 gauge and Zinc color #1 – Grey, Zinc color #2 – Black. Metalize all remaining exposed components of the gantry structures to match the color of the traffic façade treatment.

Design each gantry column to internally contain a minimum of eight-two inch watertight conduits. Terminate conduits in the bottom primary structural span member and in an at-grade control/ junction box at the base of the gantry. Locate control/ junction box on the non-traffic side of the gantry. Provide adequate mounting hardware in these conduits to facilitate the hanging of communication and electrical cables within. In lieu of locating the conduits internally within the gantry structure, watertight cable trays may be utilized provided they are concealed from view within or by the proposed aesthetic treatment.

Design the front (mainline and entrance ramp) gantries to support a DMS board, center span, on-coming traffic side. Provide three 2-inch threaded water tight connectors in the gantry for future electrical and communication service to the DMS boards. The DMS Boards are furnished and installed by others.

Locate hand-holes, stub-outs, junction boxes, or control boxes, for access to equipment cabling and electrical wiring, on the non-traffic side of the gantry structural members. Design watertight hand-holes appropriately spaced within the primary structural members to facilitate the installation of the cabling and connections of the toll equipment.

Design and install a 6 feet by 6 feet gantry substructure grid, as shown in the Aesthetic Guidelines, below the main support members and span from edge of shoulder to edge of shoulder (including future widening) to accommodate the toll monitors, sensors, controllers and other tolling equipment. Metalize substructure grid and connections to match the color of the traffic façade treatment. Design substructure grid consistent with aesthetic guidelines.

Vertical Clearance

Design gantries with a minimum of 20 feet of vertical clearance above highest point of roadway. Clearance between pavement and the toll system integration equipment shall be between 18’-18.5’ over every lane.

Rigidity

Design gantry structure and associated substructure grid sufficiently rigid and stiff to prevent excessive movement of toll system integration equipment. Design structure to resist movement of the structure from wind forces, vibration or up drafts of wind from vehicles passing within the vicinity of the sign.

Lightning Protection

Design and install a Lightning Protection System in conformance with and certified by the Lightning Protection Institute (L.P.I.) Installation Code LPI-175. Provide products meeting Underwriters Laboratories, Inc. Master Label Code 96A. Submit a UL Master Label and L.P.I. system certification upon completion of the Work.

Electrical Service

Coordinate with the NCTA selected Toll System Integrator to establish electrical power and communication/data service requirements for each toll gantry. Coordinate with the local utility company(ies), make application(s) in NCTA's name, and pay all deposit fees to provide necessary electrical and communication services for the toll gantries. The Design-Build Team shall be responsible for any application and connection fees. The Design Build Team shall be responsible for any utility service installation from the toll gantries to the service taps. NCTA will pay the monthly power bills.

ORT Facility Conduit

Design and construct gantry members to provide a water tight environment and to internally accommodate electrical and communication conduit and cabling. Provide cable trays in each of the primary horizontal structural members full length of gantries to accommodate toll system integration equipment with 15% extra capacity. Provide separation between power and data wiring per NEC requirements.

Design and construct required conduits and cabling infrastructure necessary to establish the communications path between NCTA mainline fiber optic conduit, ORT Gantries and each ORT Facility Building. Coordinate with NCTA Toll System Integrator and install the appropriate size and number of electrical and communication conduits. At a minimum, install the number and size of conduits specified in the Typical Open Road Tolling (ORT) Facility Guidelines drawings. Coordinate with the NCTA selected Toll System Integrator to confirm amount and size of conduit is acceptable with a 25% spare capacity provided. Incorporate all other conduit including, lightning protection, mechanical, power, etc.

Furnish conduits and special sized junction boxes for lateral connections between the ORT Facility Building and ORT devices as defined in this document. Conceal from view, all conduits and cables. Provide underground conduit duct bank to convey the wiring to/from base of gantries, and loop curb boxes to ORT Facility Building.

Cabling required internally for the equipment building shall enter through the building floor slab in specifically located and sized conduit stub-outs. Terminate conduit within floor slab of ORT Facility Building above finished floor elevation. Furnish conduits entering the building with plastic bushings (or comparable material) to prevent cables from being damaged when being pulled through conduits or shifting during use.

Install duct bank under roadway and shoulders at each gantry as detailed within the Typical Open Road Tolling (ORT) Facility Guidelines.

Coordinate with the NCTA selected Toll System Integrator in the conduit installation. The maximum cable distance between toll system integration equipment and the ORT Facility has critical distance limits which cannot be exceeded and still maintain proper performance parameters. The Toll System Integrator will provide these critical distance limits as these limits are specific to the technology implemented.

Above-Grade Electrical Conduits
Provide rigid metallic conduit in above ground installations.

Underground Conduit

Install conduit in accordance with the Communication/ ITS Network Conduit System Scope of Work.

Include Conduit Plugs, Pull Line in each conduit and Tracer Wire per Article 1098-4 of the 2006 NCDOT Standard Specifications for Roads and Structures.

Encase conduits and conduit duct banks in concrete when crossing under roadways.

Splice Boxes

Furnish and install special-sized splice boxes in accordance with Communication/ ITS Network Conduit System Scope of Work.

If the facility is to communicate to NCTA via a third party lease circuit, a second fiber optic pull box and conduit infrastructure is to be installed to house the leased circuit fiber optic cable.

ORT Facility Buildings

House roadside computer equipment for the toll system integration (provided by others) in an ORT Facility Building located at or near the base of each gantry as shown in the Typical Open Road Tolling (ORT) Facility Guidelines. One building may be used for both directions of the mainline toll gantries provided there is no detriment to the functionality of the tolling equipment. Design, engineer, fabricate, and erect an ORT Facility Building at each ORT Site per the ORT Collection Facility Layout. Provide an environmentally controllable ORT Facility Building with optimal toll equipment operating conditions to be fully accessible by maintenance personnel. Coordinate with NCTA selected Toll System Integrator to ensure the ORT Facility Building requirements are suitable for the proposed tolling equipment.

Design ORT Facility Buildings to be typical throughout the project limits.

Architectural Plans

Prepare an architectural plans package for the ORT Facility Buildings, to include the Architectural, Structural, Electrical, HVAC, and Mechanical/Plumbing Plans, and other documents necessary for a complete turnkey construction of the ORT Facility Buildings. Submit Design calculations including structural, foundations, HVAC and electrical calculations for all components of the ORT Facility Building with plans submitted. A professional engineer registered in the state of North Carolina shall seal all designs, plans and calculations. Design facility to meet all zoning and building code requirements.

Prepare building plans and designs in accordance with the North Carolina Building Code, latest edition, including the applicable requirements of North Carolina's Accessibility Code for Building Construction and Americans with Disabilities Act (ADA). Provide facility plans that are accurate, legible, complete in design, drawn to appropriate scales and furnished in reproducible form. Obtain all required permits to construct and occupy ORT Facility Buildings.

Site

Design each ORT Facility Building Site to provide safe ingress and egress access to the buildings for maintenance of the toll equipment. Safety of the motorist and toll technicians is paramount in the configuration and design of the ORT Facility Building Site. Provide parking space for 3 maintenance vehicles to access the ORT Facility Building from a common parking area adjacent to the ORT Facility Buildings. Access the parking area from a common access drive from the shoulder. Accommodate propane re-fueling truck in the design of the drive and parking facilities. Protect access drive with guardrail.

Do not locate the ORT Facility Buildings adjacent to areas that may be subject to the infiltration of water, steam, humidity, heat or other adverse atmospheric or environmental conditions. Avoid site locations that are below water level or near ponding water as a result of rainfall events. Grade the ORT site such that water flows away from the buildings.

Locate ORT Facility Buildings away from sources of Electro Magnetic Interference (EMI) including electrical power supply transformers, motors, Magnetic Resonance Imaging (MRI) and X- ray equipment, radio transmitters, radar transmitters, and induction heating devices in order to minimize interference with future communications cabling.

Do not locate ORT Facility Buildings adjacent to sources of constant, excessive, low or high frequency noise, such as air-handling equipment, pumps, and the like.

Do not install equipment and utilities not specifically required for the equipment building, including utility pipes, wiring, cabling, duct work or other electrical equipment within, through, or under the ORT Facility Building.

In most cases, the distance from the equipment in the equipment building to all sensor and equipment terminations at the ORT Gantry should not exceed two-hundred-fifty (250) feet. Coordinate final positioning of the ORT Facility Building at each site with NCTA selected Toll System Integrator.

General Configuration

Reference the layout of the ORT Facility Building in Typical Open Road Tolling (ORT) Facility Guidelines drawings. The ORT Facility Buildings are 12 feet by 18 feet. Design finish ceiling height to be not less than 9 feet as measured from the finished floor elevation.

Provide a storage closet measuring approximately 3 feet by 5 feet and containing shelving for supplies.

Provide one unisex restroom at two ORT Facility Buildings and strategically locate to minimize travel to such restroom facilities from within the project limits.

Provide a standby, propane fueled, generator at each ORT Facility Building with an underground storage tank to hold a seventy-two hour supply of fuel. See Section 8.0 Standby Generator for additional information.

Foundation

Construct ORT Facility Building foundation of reinforced concrete, produced, tested and placed in accordance with the 2006 NCDOT Standard Specifications for Roads and Structures.

Buildings

Provide ORT Facility Buildings of steel, concrete, or masonry construction. Provide prefabricated, pre-cast or conventional masonry brick/block on-site construction. Do not provide timber structures. Provide durable, watertight, secure, facility requiring minimal maintenance. Provide a roofing system with a minimal 20 year warranty, which does not utilize housing shingles.

Construct building exterior of materials to provide consistent appearance with the aesthetical guidelines and not requiring painting and/or routine maintenance.

Design ORT Facility Buildings for a 2 hour fire rating, unless superseded by the North Carolina Fire Code standards. Install smoke detectors and carbon monoxide detectors in the ORT Facility Building and connect to the open, interoperable unified building automation system (see Monitoring below) with appropriate alarms.

Sidewalk/ Concrete Maintenance Pad

Provide an eight-foot wide, 6 inch thick, concrete maintenance pad full length of the building on the access door side. If not directly adjacent, extend standard sidewalk from the maintenance-parking area to the concrete maintenance pad.

HVAC

Provide a 10 year life-cycle cost analysis comparing possible mechanical systems using electric, natural gas and propane alternatives for final selection of HVAC System. Provide the most cost effective system, to include the cost of obtaining the initial services.

Furnish ORT Facility Buildings with two (2), heating-ventilation-air-conditioning (HVAC) units equipped with lead/lag control unit to periodically switch between the primary and secondary unit. Size each HVAC unit as required for the equipment building size and tolling equipment normal operating temperature requirements. Submit HVAC load calculations as part of the design submittal.

Thermostatically control for optimum toll equipment operation. Install heating and cooling ducts to minimize interference with wall surface area and conflicts with electrical and communication conduits, cable trays, and cabling.

Provide open, interoperable monitoring and controlling communication system within each room of the ORT Facility Building and implement web-based control system with graphical interface that incorporates HVAC system controls within the main NCTA facility (see Monitoring below).

Water and Sewer

Provide and connect to municipal water and sewer utilities at ORT Facilities Buildings requiring restroom facilities. Design-Build Team shall be responsible for making application for connection to such utilities in NCTA name and for associated fees.

Provide an outdoor inground concealed water hydrant, accessible from the maintenance parking area, at ORT Facility Buildings which contain a restroom

Exterior Doors

Provide exterior access doors which swing outward. Provide exterior doors constructed of 316L stainless steel with stainless steel frames. Provide each door with door locks, security keypad with proximity card reader for access and monitored by CCTV camera(s). Provide door construction to suitably protect, and seal, and prevent the ingress of water, moisture, dust, gases and wind driven rain into facility.

Doors, frames and hardware shall be extra heavy duty, full flush as defined in SDI A250.8 and shall have a minimum 2 hour fire rating in accordance with ANSI/UL 10C, “Positive Pressure Fire Tests of Door Assemblies”, unless superceded by the North Carolina Fire Code Standards.

Additionally, the doors to the equipment building shall be unobstructed such that a vehicle or portable lift could access these locations.

Provide security entry and alarms reporting using open, interoperable monitoring and controlling communication system. Provide digital video security system with recording capability connected through building communication system. (Reference Monitoring below)

Interior Finishes

Fully insulate ceiling/roof, exterior walls and any interior partitions.

Provide exterior walls and ceiling fully finished with moisture resistant, paper-less, high impact gypsum board.

Provide industrial non-slip tile flooring material.

Paint the ORT Facility Building interior with a durable paint material. Submit color scheme to NCTA for approval.

Lighting

Interior

Provide interior lighting consisting of T8 industrial fluorescent lighting fixtures with wall mounted occupancy sensor and manual on/off. Provide a minimum 50 footcandles of illumination at a 30 inch work plane. Provide battery operated backup emergency packs with integral halogen heads at entrance/ exit**.** Provide lighting point by point calculations for interior lighting as part of Architectural Plan submittal.

Exterior

Provide motion sensor control, with manual on/off, exterior lighting to fully illuminate the access to the ORT Facility Building and the maintenance parking area. Provide full cut-off exterior lighting fixtures as defined by IESNA and shall be International Dark-Sky Association (IDA) compliant. Provide lighting point by point calculations for exterior lighting as part of Architectural Plan submittal.

Electrical

Provide electrical power panel, in a conventional NEMA 1 panel board enclosure, which supplies power to the future electronic toll equipment. Coordinate with the NCTA selected Toll System Integrator in the design of the electrical loading, ampere capacity rating, circuit poles, etc. for the final power panel design. Toll System Integrator is responsible for powering their equipment (including cable tray and/or conduits) from the power panel provided by the Design-Build Team.

Provide a separate power panel for the facility building lighting, power and other electrical requirements. Provide building electrical power to lights, switches, receptacles, HVAC system and other items for operating and managing ORT Facility Building.

Provide electrical service to the ORT Facility Buildings. Electrical service to the ramp ORT Facilities should consist of single phase service with an operating voltage of 120/240V and service to the mainline ORT Facilities should be 120/240V three-phase with operating voltage of 120/480V. The amperage rating of utility power service depends on the demand loads associated with toll integration system and the power loading of the ORT Facility Building and Gantry. Submit electrical Service Sizing Calculations with the Architectural design submittals.

Provide the ORT Facility Building with 125 volt rated duplex receptacles 10 foot centers at 18 inches above finished floor.

Coordinate with the local utility company(ies), make application(s) in NCTA’s name, and pay all deposit fees to provide necessary electrical and communication services for the ORT Facility(ies). The Design-Build Team shall be responsible for any application and

connection fees. The Design Build Team shall be responsible for any utility service installation from the ORT Facility(ies) to the service taps. . NCTA will pay the monthly power bills.

Telephone/ Communications

Provide one telephone voice line service and 4 data jacks within the ORT Facility Buildings. Provide required service equipment. Communication service shall be in the name of the NCTA. The Design-Build Team shall be responsible for any application and connection fees.

Security

Furnish and install a security management system for the ORT Facility Building. Provide modular system that will permit expansion in both capacity and functionality through the addition of controllers, card readers, workstations, or by increasing the number of cards and sensors.

Provide a system that incorporates the necessary hardware, software, and firmware to collect, transmit, and process alarms, notify of commercial power loss, tamper and trouble conditions, access requests, and advisories in accordance with the security procedures of the facility. The system shall control the flow of authorized personnel traffic through the secured areas of the facility. Provide a system that is fully integrated with an open, interoperable unified building automation system (see Monitoring below).

Provide a Digital Video Security System with recording capability at each ORT Facility Building with digital feed integrated into the central NCTA facility communication/ management system. Design the security system to encompass a coverage area of 25 feet minimum on all sides of the ORT Facility Building, maintenance parking area and standby generator pad.

Monitoring

Provide an open, interoperable, unified building automation system to monitor and control lighting, security, HVAC, standby generator operating status, generator fuel level and other functions onsite and at a remote location, 24 hours a day through a single Web-enabled interface with graphical interface. Provide a monitoring system to detect and disseminate alarms for heat, smoke, fire, carbon monoxide and other detrimental environmental hazards.

Design system to monitor at minimum the temperature and relative humidity. Provide system capable of reporting historical trends to analyze seasonal changes and other outside influences. Design system with sensors to obtain temperature and humidity information from all areas of the ORT Facility Building. Provide monitoring system with alarm capable to notify NCTA when conditions move outside the set parameters.

Provide ORT Facility Building with carbon monoxide detectors sufficient to monitor and detect elevated carbon monoxide levels within the building.

Lightning Protection

Design and install Lightning Protection System in conformance with and certified by the Lightning Protection Institute (L.P.I.) Installation Code LPI-175. Products to comply with Underwriters Laboratories, Inc. Master Label Code 96A. The lightning protection system installer shall submit a UL Master Label and L.P.I. system certification upon completion of the Work.

Standby Generator

Furnish and install a permanent mounted standby generator for uninterrupted electrical service in the case of electrical service failures. The table below shows sizes of generator anticipated for the ORT facilities. Coordinate with NCTA selected Toll System Integrator and ITS Contractor in confirming the size of the standby generators.

Anticipated Standby Generator to Power ORT Facility	
Mainline Plaza	**45 Kw**
Ramp Plaza	**110 Kw**

Size the propane standby generator to provide 100 percent ORT Facility backup power plus 25% additional capacity for a minimum of 72 hours. Provide standby generator to power each complete ORT Facility to include toll equipment, VES lights, sensors, DMS on gantries, lighting, electrical system, security system, monitoring and HVAC services. Provide standby generator with an automatic transfer switch designed to run after 5 seconds of power outage. Connect and monitor the standby generator operational status with the open, interoperable unified building automation system (see Monitoring above). Evaluate and include a method for reducing the noise impact caused by the power generators to residences near proposed ORT Facility Building locations. Provide fuel tank with a level sensing device which interfaces with the open, interoperable unified building automation system (see Monitoring above). Install a transfer switch to interact and directly communicate with building automation system for critical status indications. Design underground propane fuel tank system compliant with all local, State, and Federal requirements. Comply with NFPA 54, National Fuel Gas Code.

Shelter generator from the elements by either a self-contained, tamper resistant shelter or place within a separate building. Design generator building to include automated motorized damper for air intake and muffled exhaust system from the generator.

Screen Wall

Provide decorative screening/wall around three sides (not including the access side) of the ORT Facility Building, including the maintenance parking area and generator pad/building, to visually shield the motorist from viewing such areas. Design decorative screening/wall consistent with aesthetic design of the noise wall and retaining wall designs in the Aesthetic Design Guidelines.

Monitoring and Control System Integration Requirements

A. This section defines the Basic Materials and Methods provided by the Controls Contractor and used in the installation of LonWorks Control products to provide the functions necessary for control of the mechanical systems on this project. All mechanical and electrical (HVAC, Lighting, Power Metering, Security, etc) systems will integrate into an open, interoperable LON based system. All monitoring and control will be accessed via a web based user interface which will be located at a central Network Operations Center. Ethernet access will be provided to each location and management of the Ethernet network will be the responsibility of NCTA. Please be advised that the requirements of this specification will be strictly enforced. Systems that do not meet the requirements of the specification as outlined below (section 1.1 in particular) will not be accepted.

B. Provide an Energy Management and Control System incorporating LonWorks, Direct Digital Control (DDC), equipment monitoring, and control consisting of microprocessor based plant control processors interfacing directly with sensors, actuators, and environmental delivery systems (i.e. HVAC units); electric controls and mechanical devices including dampers, valves, panels, sensing devices; a primary communications network to allow data exchange between microprocessor based devices.

C. The system will consist of a flat, open architecture that utilizes the ANSI/CEA 709.1 (LonTalk™) Protocol as the common communication protocol between all controlled and controlling devices. Where necessary or desired, LonTalk packets may be encapsulated into TCP/IP using IP-852 routing messages to take advantage of existing infrastructure or to increase network bandwidth. Hierarchal systems consisting of master or global controllers that poll and/or control less intelligent unitary controllers on a secondary bus will not be considered.

D. The entire system network shall be a Local Operating Network (LON). All nodes shall communicate with each other utilizing ANSI/CEA 709. There will be no consideration given to any network which does not use LonWorks as the primary communications network. Controllers shall be capable of sharing standard network variable data with other LON-based devices.

E. Controllers shall implement the full ANSI/CEA 709.1 “LonTalk” protocol. Controllers must meet all of the requirements of this standard and must adhere to all of the protocol definition set forth by ANSI. All controllers shall be able to co-exist and interoperate on the LonWorks network without interfering or limiting other controller’s functionality. Controllers shall be able to be installed by any standard LonWorks Network Services (LNS) based network management tool.

F. The system installed shall seamlessly connect devices other than HVAC throughout the buildings regardless of subsystem type, i.e. HVAC, lighting, and security devices should easily coexist on the same network channel without the need for gateways. Use of ANSI/CEA-852 (IP-852) layer 3 transparent routers is the only acceptable method spanning multiple channels and is the recommended method for system scalability. These

components shall share common software for network communications, configuration, time scheduling, alarm handling, history logging, and custom programming. Any routers required by the system shall be supplied and commissioned as part of this project.

G. Gateways shall not be used unless specifically authorized in writing. Use of a gateway requires submittal of the documentation as required by the owner or owner's representative. It is the intent of this specification that gateways be limited to integrating legacy systems where applicable. Acceptance of gateways is at the sole discretion of the owner.

H. System Monitoring shall be provided through the installation of Graphical User Interface (GUI) software applications that support a direct driver to the LonWorks database or through web browser based devices (see GUI requirements below). The GUI shall provide complete access to any point in the system at any time. A complete and fully commissioned LNS database must be delivered for use with the GUI as a specific deliverable. This database must include ALL node definitions, ALL channel and subnet definitions, all router and repeater definitions, and all bindings etc.

I. The control system shall be designed such that mechanical equipment will be able to operate under stand-alone control. Functional methodology such as scheduling, trending, and alarming shall be outlined fully. Methodology must follow pertinent and applicable LonMark guidelines. Controllers that require a master computer or controller to perform basic functions are not acceptable. In the event of a network communication failure, or the loss of any other controller on the LON network, the control system shall continue to independently operate under control of the resident program stored in nonvolatile memory as detailed herein.

J. The documentation contained in this section and other contract documents pertaining to HVAC Controls is schematic in nature. The contractor shall provide all required hardware and software necessary to implement the functions shown or as implied in the contract documents.

K. System configuration and monitoring will be performed via a PC-type computer. Under no circumstances shall the PC be used as a control device for the network. It can be used for storage of data, network management, and as a GUI. If the PC is taken off line, the control system shall continue to operate fully.

L. All LonWorks devices (controllers, sensors, actuators, etc) shall be integrated into one common network infrastructure utilizing a common network management tool and creating a single LNS network database.

M. All system controllers shall utilize a peer-to-peer communications scheme to communicate with each other and with the PC-type monitoring computer(s). All controllers shall utilize Standard Network Variable Types (SNVTs) as defined by LonMark International. Controllers shall implement LonMark device profiles as appropriate. All devices shall be provided with an LNS plug-in configuration utility. If a

LNS plug-in is not available for a device, all device resource files, XIF files, and points list shall be provided.

N. Controllers shall contain non-volatile memory for storage of control programs, configuration, and setpoints. All such data shall be retained in the event of a power failure. At least one controller shall have an on-board (battery or "super cap"-backed) real-time clock to ensure correct time-of-day operation following a power failure. Controllers that are not backed-up in the event of a power failure and that require time based operation (VAVs, heat pumps, etc..) shall be peers on the network and be able to obtain time synchronization from a power fail protected controller and/or controllers upon network power restore.

O. Historical data logging, alarm monitoring and management, and scheduling shall be accessible and managed via the GUI.

P. Controllers shall use a software mechanism for network addressing and identification. It shall not be required to set physical network address switches on each controller.

Q. System shall utilize LonMark defined standard network and command messaging for all system data.

R. In general, only LonMark certified devices will be accepted on this control network. Each device must be LonMark certified version [3.2] or higher. In those instances in which LonMark devices are not available, provide LonWorks devices with application source code, device resource files, and external interface definitions. Any controller that does not meet this spec must be stated and submitted with specific reason why it is not LonMark certified. LonMark compatible, LonMark compliant, LonMark "ish" controllers are not acceptable. Exceptions may be granted for programmable controllers utilizing a custom programming software tools. These programmable controllers must meet all LonMark requirements for interoperability and shall utilize standard variable and configuration properties (SNVTs, SCPTs) as defined by LonMark. Any custom software required for controller programming shall be included as a leave-behind tool with license capability built into the bid to support the installation.

S. If a dedicated configuration tool is provided it is must be launched as a plug-in from within the network management software tool. If not, any software required for controller configuration shall be included as a leave-behind tool with full license capability to support the installation.

T. The network infrastructure shall conform to the LonMark published guidelines for network wiring and system architecture. Wire type, distance, termination, and use of routers shall strictly conform to the LonMark wiring standards. The number of nodes per channel shall be no more than 80% of the defined segment (logical or physical) limit in order to provide future system enhancement with minimal infrastructure modifications.

U. Upon job completion provide all drawings, product information, complete and functional LNS databases, resource files, configuration files, etc on standard recordable media (CD, DVD).

V. The Design-Build Team shall provide 2 legal copies of all software tools, configuration tools, management tools, and utilities used during system programming, commissioning, and installation. All software shall be provided on original optical media with full usage licenses. All software licenses shall be user installable with product keys, passwords, dongles, etc. provided at project close. All tools shall be generally available in the market. No closed and/or unavailable tools will be permitted. Contractor shall convey all software tools and their legal licenses at project close out.

W. Specification Compliance Checklist:

		✓ Check
Architecture:	Flat Peer to Peer Lon w/ Layer 3 routing only	
Communication Protocol:	LonTalk (ANSI/CEA 709.1)	
Transceiver:	ANSI/CEA 709.1a FTT-10 Free Topology Transceiver	
Processor:	Implements full ANSI/CEA 709.1 protocol	
Network Operating System/Database Standard:	LonWorks Network Services(LNS)	
Message Tags:	LonMark Defined Standard Network Variable Types (SNVT) & Standard Configuration Property Types (SCPT)	
Use of Gateways:	Pre-approved Only. For converting proprietary to LON Only	
Network Management/ Commissioning Tool:	LonMaker for Windows	
Contractor Certification:	Training certification requirements LonMark Professional Certification Credential	
Product Certification:	LonMark Certified [3.2] or better	
Media Type:	FTT for devices, IP-852 for backbone connectivity	
Twisted Pair Wiring Topology:	Free Topology, Polarity Insensitive	
Other Considerations:	Must provide external interface file (XIF files) and device resource files for each device. Must provide LNS Plug-in for each device.	

Summary of Work

A. Provide LonWorks based products that communicate on multiple channels to meet the functional specifications.

B. Provide FTT-10A LonTalk routers and repeaters as required to combine different communication channels onto a central field bus or as required to segment groups of Intelligent Devices and/or Control Units.

C. Provide Intelligent Control Devices, Programmable Controllers, and Application Specific Controllers as herein specified, as needed to perform functions indicated in the input/output summaries and sequences of operation, and/or indicated in the HVAC scope of work.

D. Provide wire, raceway systems, 24 VDC and/or 24 VAC power supplies and final connections to nodes provided by this contract.

E. The contractor shall provide all controls and sequence of operations as required by these specifications and by the drawings. Provide all required devices, sensors, hardware, software, wiring, controllers, etc. Provide all required devices, sensors, hardware, software, wiring, controllers, etc. including any required and not specifically addressed in this specification but required for system functionality. It shall be the responsibility of the Design-Build Team to provide a complete and functional system.

F. The system shall allow for integration of other systems (Card Access, Lighting, Intrusion Monitoring etc.) on the network proposed in this document, and also share a common infrastructure for network communications, time scheduling, alarm handling, history logging, monitoring and system control.

Other Services

A. The work scope shall also include the furnishing of services of various engineering disciplines both in the field and in home office in order to complete the work in a satisfactory and professional manner. The Control System Contractor is responsible for providing these engineering services.

B. Provide technical direction of the installation as specified herein.

C. Provide field calibration, testing and commissioning of equipment as specified herein.

D. Incorporate Uninterruptible Power Supply surge transient protection in the installation of the system to protect electrical components in all LonWorks controllers, remote controllers, and operator's workstations.

E. Provide submittals, software, data entry facilities Portable Operator’s Terminal

(POT), programming, startup, test and validation, training of the Custodian and Maintenance Representative on maintenance and operation, as built documentation and system warranty.

F. Provide special tools, testing equipment as required for operation, installation, and maintenance of the equipment specified herein.

G. Provide data communication wiring and connections between LonWorks controllers and RC controllers and DDC controllers.

H. Provide documentation and complete Operating and Maintenance Manuals.

I. Provide start-up and system commissioning.

J. Provide accurate and current LNS Database of the control network to Architect/Engineer of Record. Any changes on made on the network shall be incorporated into the LNS database and an updated database shall be provided ensuring the Architect/Engineer of Record always has the correct and current database for the control system.

K. Provide documentation on all point naming conventions to the Architect/Engineer of Record/ for incorporation into the GUI.

L. Provide a CD backup of the LNS database upon ANY changes or updates to the database.

M. The network infrastructure shall conform to the published guidelines for wire type, length, number of nodes per channel, termination, and other relevant wiring and infrastructure criteria as published (reference: Junction Box and Wiring Guidelines for Twisted Pair LonWorks Networks).

N. Any host PC GUI interface shall use openly available software packages that are nonexclusive. No closed software will be accepted. Software must be generally available on the market from multiple sources.

O. System Contractor shall provide references of prior successful experience.

P. System Contractor must demonstrate ability and intent to design, architect, and install an open, logically flat, LonWorks system.

Q. No exclusive or non-open integration tools, devices, or host software shall be used as part of this open system.

R. If Internet or IP connectivity is specified, all devices connecting to the LAN shall use the TCP/IP protocol stack. Any LAN to LonWorks routers shall use the ANSI/CEA-852 standard layer 3 transparent routing protocol. Specific IP interconnectivity shall

follow IT standards for security, firewalls, address, etc. published in separate documents (if appropriate).

S. The control system shall be installed using the best available products from the currently available suppliers that meet the system specification. Controllers from multiple manufactures are acceptable.

T. The system integrator shall provide a protocol analyzer log summary for each channel for a minimum of 24 hours showing system performance. The statistical summary shall show that all bandwidth utilization and error limits are within acceptable ranges and that there are no network traffic problems, node communication problems, or system sizing problems.

COMMUNICATION / ITS NETWORK CONDUIT SYSTEM SCOPE OF WORK (3-14-2008)

INTRODUCTION

This project will require the installation of an underground conduit system including conduit, tracer wire, junction boxes, splice boxes, and delineator markers. Fiber optic cable, ITS devices and toll technology devices, and electrical/ communication/ data services to the ITS devices are not included in this contract and will be installed by others. The Design-Build Team shall be responsible for determining the exact location of the conduit and junction boxes, obtain Engineer's approval of the locations, install the conduit, tracer wire, junction boxes, splice boxes, and delineator markers, and develop and implement testing and coordination procedures.

Upon completion of the work, the Design-Build Team shall conduct field testing, and maintain the communication network conduit system until acceptance by the NCTA prior to the installation of the ITS and toll technology devices.

The Design-Build Team shall be responsible for submitting applications, and securing/ obtaining associated fees for any permits for the conduit installation. The permits shall be obtained in NCTA's name. NCTA shall be responsible for any reoccurring annual fees that may be associated with such conduit installation.

DESIGN REQUIREMENTS

Conduit, junction box, and splice box placement must be in compliance with the ITS/ Toll Communication Plans for the Western Wake Freeway. The Design-Build Team shall coordinate the conduit, junction box, and splice box locations with NCTA, NCDOT, contractors working on adjacent NCTA and NCDOT projects, the contractor installing the ITS components, and the contractor installing the toll integration system components. The Design-Build Team shall locate the conduit system to avoid conflicts with future widening, drainage facilities, toll gantries, toll buildings, future ITS devices, guardrail, sign structures, and DMS signs. The conduit shall be located so that it is not necessary to close a lane or shoulder in order to access the junction or splice boxes.

Design the mainline conduit to stay on one side of the Western Wake Freeway. Install a lateral conduit across the roadway at each proposed ITS device on the opposite side of the roadway and at each interchange for connecting ITS devices or for future use as shown on the aforementioned plans. The lateral conduit shall intercept the mainline conduit in a splice box.

Splice boxes for splicing and storing fiber optic cable shall be located at (1) every interchange; (2) each mainline and ramp toll facility; (3) the intersection of every lateral conduit (serving future devices as shown in the ITS/Toll Communications Pans for the Western Wake Freeway); and (4) the beginning and end of the project. At each of the above locations, two splice boxes shall be provided. One splice box shall accommodate one ITS conduit with a spare conduit, and the other splice box shall accommodate the toll device conduit with a spare conduit.

Junction boxes shall be provided approximately ¼ mile between splice boxes and at the terminus of each conduit not already having a splice box. One junction box shall accommodate one ITS conduit with a spare conduit, and another junction box shall accommodate the toll device conduit with a spare conduit.

GENERAL REQUIREMENTS

Standard Specifications

Perform all work in accordance with the *July 2006 NCDOT Specifications for Roads and Structures* and the *2006 NCDOT Roadway Standard Drawing*, referred to within this Scope of Work only as collectively "*Standard Specifications*".

Functional Requirements

Perform all work in accordance with the requirements of the following contract documents:

- *ITS/Toll Communication Plans* for the Western Wake Freeway dated April 14, 2008
- *Typical Open Road Tolling (ORT) Facility Guidelines*

Other Codes and Standards

All communication conduit system materials must conform to the latest version of the applicable standards of the National Electric Manufacturer's Association (NEMA), the Underwriters' Laboratories, Inc. (UL), the Electronic Industries Association (EIA), the International Municipal Signal Association (IMSA), and the National Electrical Safety Code (NESC). All materials and workmanship must conform to the requirements of the NESC, standards of the American Society for Testing and Materials (ASTM); American National Standards Institute (ANSI). Comply with all federal laws, state laws, and city codes in accordance with Section 17 of the *Standard Specifications*.

Materials

1. **Design-Build Team Furnished Materials:**

   Furnish new equipment, materials, and hardware that meet the requirements of the *Standard Specifications* and this Scope of Work.

   Refer to the following articles of the *Standard Specifications*:

Item	Section
Conduit	1098-4(B) 4
Conduit Plugs, Pull Line, and Tracer Wire	1098-4
Junction Boxes (Oversized Heavy-Duty)	1098-5 (C)
Delineator Markers	1098-13
Backfill	1018-2
Incidental Stone Base	545-2 & 545-3

The special-sized splice boxes described below shall be used for storing and splicing fiber optic cable. The oversized junction boxes shall be used for pulling fiber-optic cable.

The 2006 *Standard Specifications* are revised as follows:

Delineator Markers (1098-13)

Page 10-278, Revise text to be displayed on delineator marker from "North Carolina Department of Transportation" to "North Carolina Turnpike Authority". The Engineer shall furnish a phone number to be included on the marker.

The Engineer must approve all materials for use before installation. See "Submittals and Reviews" section for required catalog cut documentation.

Oversized, Heavy-Duty Junction Boxes

Comply with Article 1411-3 Electrical Junction Boxes, except as follows:

Provide junction box covers with standard "NCTA Fiber-Optic Cable" logo, pull slots and stainless steel pins.

Do not provide sealant compound between junction boxes and covers.

Provide oversized heavy-duty junction boxes and covers with minimum inside dimensions of 30"(l) x 15"(w) x 24"(d) that meet or exceed the Tier 15 requirements of ANSI/SCTE 77. Provide certification that testing methods are compliant with ANSI/SCTE 77.

Special-Sized, Heavy-Duty Splice Boxes

Comply with Article 1411-3 Electrical Junction Boxes, except as follows:

Provide splice box covers with standard "NCTA Fiber-Optic Cable" logo, pull slots and stainless steel pins.

Do not provide sealant compound between junction boxes and covers.

Provide special-sized heavy-duty splice boxes and covers with minimum inside dimensions of 36"(l) x 24"(w) x 24"(d) that meet or exceed the Tier 15 requirements of ANSI/SCTE 77. Provide certification that testing methods are compliant with ANSI/SCTE 77.

2. Qualified Products List:

The NCTA will accept materials covered in the Communication / ITS Network Conduit System Scope that are on the NCDOT Qualified Products List (QPL). The Design-Build Team shall submit a listing of items on the QPL to receive approval for use on the project. Catalog cuts will not be required for items on the QPL. The QPL web site is:

http://www.ncdot.org/doh/preconstruct/traffic/ITSS/SMS/qpl/

Submittals and Reviews

The Design-Build Team must submit 100% project plans, catalog cuts, and specifications for materials, installation and testing for acceptance by the NCTA.

Maintenance and Repair Requirements

The Design-Build Team shall maintain and repair the communication network conduit system until the final acceptance of the work covered in this Scope of Work by the NCTA. After the acceptance of the system the Design-Build Team shall be responsible for repairing any damage caused to the system by Design-Build Team or due to faulty materials or workmanship in accordance with the Project Special Provision "Three-Year Guarantee."

UNDERGROUND CONDUIT AND JUNCTION BOXES

Underground Conduit

Furnish and install underground HDPE conduit in accordance with the provisions of Sections 1098 and 1715 of the 2006 *NCDOT Standard Specifications for Roads and Structures*.

The 2006 *NCDOT Standard Specifications for Roads and Structures* are revised as follows:

Underground Conduit-Construction Methods (1715-3)

Page 17-10, Subarticle 1715-3(B) Section (1), Revise 1st paragraph, 2nd sentence to:

All underground conduit installed inside railroad right-of-way shall be rigid metallic.

Install a main fiber optic conduit trunk-line consisting of four direct buried two inch conduits (one toll, one ITS and two spare) longitudinally along the outside shoulder of one side of the facility from the Interchange at NC 55 Bypass and connect into a splice box, which will be installed under the U-4763B project, within the NC 55 interchange at the northern project terminus. Install four – two inch conduits from the main conduit line to all Open Road Tolling (ORT) Facility sites. Install two – two inch conduit at lateral conduit locations for DMS devices. Install additional conduit at ORT facilities connecting the buildings to the conduit lines detailed herein. (Reference for the Open Road Tolling Infrastructure System Scope of Work)

Coordination shall occur with the NCTA selected ITS and Toll System Integrator to minimize further conduit installation during concurrent contract work.

Do not install longitudinal runs of conduit along the median or in locations of future roadway widening. Install the conduit an adequate distance from the travel lane to avoid future damage from guardrail and sign installations.

Conduit may be supported from bridges or may be installed under Y-lines and streams. The Design-Build Team shall provide details for the conduit at road, stream and railroad crossings. Design details for supporting conduit across a bridge shall be submitted for review and approval.

Furnish conduits in black, orange, blue and white colors. Provide conduits that are factory extruded with the appropriate colors. Reserve two conduits consistently through the project for the toll technology devices, colors blue and white, and the other two conduits for ITS devices, colors black and orange. Furnish conduit organizers at all points where multiple conduits enter and exit a splice box or cabinet. Furnish conduit organizers that are appropriately sized with regards to the conduits. Provide conduit organizers that are removable.

A Pull Line is required within each conduit.

After installation of the conduits and upon completion of tamping and backfilling, perform a mandrel test on each conduit to ensure no conduit has been damaged. Furnish a non-metallic mandrel having a diameter of approximately 85% of the inside diameter of the conduit in which it is to be pulled through. If damage has occurred, replace the entire length of conduit. Ensure pull line has been re-installed.

Junction Boxes and Splice Boxes

Furnish and install junction boxes in accordance with the provisions of Section 1716 of the 2006 NCDOT Standard Specifications for Roads and Structures and this Scope of Work.

Comply with Article 1411-3 Electrical Junction Boxes of the Standard Specifications, except as follows:

Install junction and splice boxes flush with finished grade. Do not install sealant compound between junction/splice boxes and covers.

Install junction and splice boxes where underground splicing of cable is necessary and where transitioning from below ground to above ground installation or vice-versa.

Delineator Markers

Furnish and install delineator markers in accordance with the provisions of Section 1733 of the 2006 *NCDOT Standard Specifications for Roads and Structures*.

Place delineator marker at every splice and junction box location.

Documentation

Upon completion of the conduit, splice box and junction box installation, furnish the Engineer with As-Built Drawings in accordance with the CADD guidelines, which are coordinately correct, horizontal and vertical, and tied to the state coordinate system. As-Built Drawings shall be provided for all conduit, splice box and junction boxes installed as part of this Scope of Work.

COORDINATION AND TESTING

Coordination and Test Plan

Submit a detailed coordination and test plan to the Engineer for acceptance at least 10 calendar days prior to installation of any components. Identify all required testing and coordination levels for the underground conduit and junction box placement. A minimal test and coordination plan must delineate the following:

- Coordination procedures
- Test procedures
- Submittal schedule
- Submittal of the completed and signed off test report

Revisions to the testing and/or coordination plan must approved by the Engineer.

Coordination Procedures

Prepare and submit coordination procedures, for the conduit, splice box and junction box placement, for review and approval by the Engineer before the installation of any components. The coordination procedures must include the following:

- A listing of the identified contact for all groups requiring coordination. This includes but is not limited to the NCTA, NCDOT, contractors working on adjacent NCTA and NCDOT projects, the contractor installing the ITS components, and the contractor installing the toll system integration components.
- An explanation of how the coordination process will ensure that the conduit and junction boxes installed under this project will connect to the conduit systems installed on adjacent NCTA projects.
- An explanation of how the coordination process will ensure that the conduit and junction boxes installed under this project will meet the requirements of the contractor installing the ITS components and the contractor installing the toll system integration components.
- A schedule for the design, installation, and testing of the conduit system. The schedule shall be coordinated with and not obstruct the schedules developed by the contractors installing the ITS components and the toll system integration components.

Conduct meetings with the identified coordination group including the following:

- Preconstruction meeting
- Construction update meetings (during construction)
- Post-construction meeting

Test Procedures

Prepare and submit written test procedures for conduit system tests to be performed. Provide test procedures for review and approval by the Engineer before any tests are conducted. The test procedures shall follow industry standards. The testing shall demonstrate the following:

- All conduit runs are open
- Junction boxes are installed correctly with working lids and are free of debris

The conduit system must be tested in accordance with the testing plan and procedures developed by the Design-Build Team and approved by the Engineer. Notify the Engineer of the proposed date, time and location of all testing 10 calendar days in advance of the test being performed. All testing must be performed by the Design-Build Team and shall be observed by the Engineer. The Engineer or assignee may perform additional testing at any time during the project.

LIGHTING SCOPE OF WORK (04-09-08)

I. General

Provide lighting design in accordance with the NCTA Lighting Design Criteria and NCTA Lighting Design Requirements dated January 2008. Furnish and install, and connect and place into satisfactory operating condition, lighting equipment and materials in accordance with Division 14 of the *2006 NCDOT Standard Specifications for Roads and Structures*, and the *2006 NCDOT Roadway Standard Drawings* unless otherwise detailed herein. Provide electronic CADD files in MicroStation format, using Geopak Software (current version used by NCDOT), showing proposed design. There is no aviation, navigation, sign, or tunnel lighting included on this project.

II. Roadway Lighting

Lighting shall be designed, furnished and installed for the following interchanges with the Western Wake Freeway:

- NC 55 Bypass (Ramp A, Ramp D and Loop C only)
- US 1
- South Salem Street (Old US 1)
- US 64 (excluding Kelly Road)
- Green Level West Road
- NC 55 (including all ramps and loops)
- No other continuous freeway lighting is required on Western Wake Freeway.
- In addition, any existing lighting that is impacted by construction shall be replaced by the Design-Build Team in like kind.

III. Final Inspection

Contact Lighting / Electrical Engineers from NCTA or their representatives to inspect the completed lighting system and perform insulation resistance testing for all conductors prior to contract acceptance.

IV. Electrical Service

Coordinate with the local utility company(ies), make application(s) in NCTA's name and pay all deposit fees to provide necessary electrical service. Refer to Utilities Coordination Scope of Work for additional coordination requirements. NCTA will pay the monthly power bills.

V. Maintenance

Assume responsibility for maintenance of the lighting system(s) for the duration of the contract in accordance with Section 1400 of the *2006 NCDOT Standard Specifications for Roads and Structures.*

NCTA Lighting Design Criteria

GENERAL REQUIREMENTS

Introduction

This Lighting Design Criteria document shall be used in the design of lighting systems for all North Carolina Turnpike Authority (hereafter referred to as "the Authority") projects and facilities. The Design-Build Team shall be responsible for the total design, fabrication, delivery, assembly and erection of all components covered by this Lighting Design Criteria document and as described in all Contract / RFP Documents.

These lighting systems may include, but are not limited to, lighting installations for new roadways, bridges, underpasses, toll plazas, signs, parking areas, and/or modifications to various existing systems throughout the Authority's facilities.

This Section is not intended to be a design handbook, but rather a guideline covering the Authority's current standards for system design and preparation of contract documents. It is essential that the basic criteria covered in this manual be followed as closely as possible by the electrical engineering staff of each Design-Build Team in order to achieve uniform and consistent lighting systems throughout the Authority's facilities.

Satisfying all of these criteria will necessitate sound judgment and good engineering practice on the part of the Design-Build Team. Where special designs deviate from these basic criteria, the Design-Build Team shall secure written approval from the Authority (see below).

For installation of toll plaza systems, power and lighting systems installed within Authority buildings, Intelligent Transportation Systems (ITS), traffic signal systems, and installation / relocation / modification of utilities, see the other Design Criteria Documents included with this RFP.

Lists of items or descriptions included in this Section in order to illustrate various concepts shall not be interpreted as being all inclusive.

The Design-Build Team should feel free, at any time, to contact the Authority to receive consultation on extraordinary issues or interpretations of the Contract Documents prior to design or submission.

Contract Documents

The Design-Build Team shall utilize the information in the Contract Documents to prepare the required submittals outlined below and as required by the Authority and the RFP. Information provided in the Contract Documents establishes the design intent and the general size, quality and character of each component of the final system. The

functional layout, minimum clearance dimensions, details, materials, and design intent shall be maintained for the final lighting systems.

All components of the lighting systems shall be designed by the Design-Build Team. The design shall ensure uniformity by compliance with the established applicable codes and design standards, however, where unique needs apply, location specific designs may be necessary. Where any of the Contract Documents issue direction to "See Plans" or consult the NCTA Lighting Design Requirements for more information, the design element in question shall be designed by the Design-Build Team in accordance with the industry standards and all requirements of the Contract Documents.

The Contract Documents to be used for design, fabrication, and construction of lighting systems include:

1. This Lighting Design Criteria document, including all specifications in Section 3 below. The specifications included represent a level of design establishing specific requirements and criteria for the various components of the Authority interchanges, toll plazas, and other lighting systems.

2. *NCDOT July 2006 Roadway Standard Drawings* – Division 14 "Lighting" as amended below:

Standard Drawing	**Sheet**	**Modification**
1401.01	1	• Include lightning protection on all High Mount Towers in accordance with *Standard for the Installation of Lightning Protection Systems.* National Fire Protection Association (NFPA). Publication Number NFPA 780. • Allowable heights shall be 80, 100, and 120 foot. • Number of luminaires permitted shall be 4, 6, 8, or 12. • High Mount Standard design shall be signed and sealed by a Professional Engineer licensed in the state of North Carolina. • Base plate shall accommodate a minimum of 8 bolts.
1401.01	2	No modifications required.
1402.01	1	• All High Mount Foundations shall be designed by the Design-Build Team. The design shown on this sheet shall be used as reference only for the general layout, dimensions, materials, and requirements of the foundation design. • To prevent water entry into standard base, top of foundation shall be 2 feet above finished grade at a minimum. • High Mount Foundation design shall be signed and sealed by a Professional Engineer licensed in the state of North Carolina.
1403.01	1	• IES Distribution shall be Type V symmetric
1404.01	1	Delete this drawing. See Lighting Design Requirement Drawings (L5, L6, and L7) for Pole-Top Light standard.
1404.01	2	No modifications required.

Standard Drawing	Sheet	Modification
1404.01	3	Delete this drawing. See Lighting Design Requirement Drawings (L5, L6, and L7) for Pole-Top Light Standard.
1405.01	1	No modifications required.
1405.01	2	No modifications required.
1405.01	3	No modifications required.
1406.01	1	Delete this drawing. See Lighting Design Requirement Drawings (L5, L6, and L7) for Pole-Top Lighting Luminaire.
1407.01	1	• Calculations shall be performed to verify that #1/0 service lateral is adequate to maintain 3% voltage drop at all luminaires connected to the Light Control System. A larger wire and/or conduit size shall be used if required. • Height and class of pole shall be reviewed by the NCTA. The D-B Team shall coordinate the design with the utility company.
1408.01	1	• Design-Build Team shall size all breakers and internal wiring sizes for the Light Control System. • Design-Build Team shall ensure that a fit of all components within the designed enclosure is feasible.
1408.01	2	• Design-Build Team shall indicate required feeder circuit connections to the lighting components.
1408.01	3	No modifications required.
1409.01	1	No modifications required.
1410.01	1	No modifications required.
1411.01	1	No modifications required.
1412.01	1	• Design-Build Team to provide contract-specific details where underpass lighting is required.
1412.01	2	• Design-Build Team to provide contract-specific details where underpass lighting is required.

3. North Carolina Department of Transportation July 2006 *Standard Specifications for Roads and Bridges* – Division 14 "Lighting." Sections included in the Contract Documents shall be as published except for the following modifications:

Specification Section	Modification
1402	• All High Mount Foundations shall be designed by the Design-Build Team according to the listed requirements for "Site-Specific High Mount Foundations."
1404	• Replace references of "bracket arms" with "luminaire mounting assemblies." • Wind velocity used in the design shall be 110 mph.
1406	Delete this section. See below for specification of Pole Top Luminaires to be used on Authority projects.

4. Lighting Design Requirement Drawings – These Drawings are split into two groups:

    a. Drawings showing design methods for interchange and toll plaza Lighting systems:

        - Sheet L-1: Interchange Lighting Design Guidelines -1-
        - Sheet L-2: Interchange Lighting Design Guidelines -2-
        - Sheet L-3: Toll Plaza Lighting Design Guidelines -1-
        - Sheet L-4: Toll Plaza Lighting Design Guidelines -2-

    b. Drawings showing standard Authority lighting equipment where it deviates from the North Carolina Department of Transportation's Standard Drawings:

        - Sheet L-5: Light Standards – Pole-Top Single Luminaire
        - Sheet L-6: Light Standards – Pole-Top Double Luminaire
        - Sheet L-7: Light Standard Luminaires – Pole-Top Luminaire

5. AASHTO *Roadway Lighting Design Guide* and *An Informational Guide to Roadway Lighting.*

6. All plans, specifications, and other documents as described in the Request for Proposals (RFP).

Alternate Equipment and Modification of Contract Documents and Design Criteria

Design Modifications after Award of Contract

Standard designs, specifications, and drawings for lighting equipment are maintained by the Authority to ensure uniformity of lighting components and aesthetics across all Authority facilities. The Design-Build Team shall use, to the greatest extent possible, these components that meet these standards when developing system designs.

When, in the opinion of the Design-Build Team, criteria outlined in the Contract Documents cannot be achieved using standard equipment due to unique physical or geometric conditions or other limiting factors, the Design-Build Team shall solicit the opinion of the Authority. In such cases, the Design-Build Team shall submit a comprehensive analysis of design parameters, including supporting calculations and related data, for approval.

The Authority shall have final approval of all special inquiries made by Design-Build Teams in the course of seeking approval for substitute or alternative equipment proposed for use on projects.

When, in the opinion of the Design-Build Team and according to sound engineering judgment, it is not possible to meet the lighting, power, or electrical design criteria outlined in this Section with any type of equipment due to unique limiting factors, and/or the Design-Build Team believes that the procedures and criteria in this Section should be amended for a specific project, the Design-Build Team shall request a modification of design criteria. Requests for modifications to design criteria shall indicate the exact requirements to be waived and shall include a description of the underlying engineering analysis. All requests for modification shall be prepared, submitted, and approved prior to the commencement of design. If any specific design criteria are not met by a submitted design and appropriate design criteria modifications have not been approved by the Authority, the submission will be rejected without further or complete review, and resubmission will be required.

Approval of non-standard equipment or modifications to design criteria on one project or portion of a project shall not be interpreted as a mandate for similar waiver of Authority standards in other project locations without separate requests submitted in accordance with the above procedures.

Applicable Codes and Design Standards

The Design-Build Team shall abide by the Contract Documents that include *the 2006 NCDOT Standard Specifications for Roads and Structures* and *NCDOT Standard Roadway Drawings* as well as all applicable codes including, but not limited to, the following. The versions used shall be the same versions adopted by the state of North Carolina at the time of commencement of design:

1. *International Building Code*. International Code Council (ICC). Publication
2. *National Electric Code (NEC).* National Fire Protection Association (NFPA). Publication Number NFPA 70.
3. *National Electric Safety Code.* Institute of Electrical and Electronics Engineers, Inc. Publication C2.
4. *Standard Specifications for Structural Supports for Highway Signs, Luminaires, and Traffic Signals* including all interims. American Association of State Highway and Transportation Officials (AASHTO).
5. Local codes, standards and ordinances.

The following publications have been used in developing the lighting design criteria and procedures, and shall serve as a reference to system design where requirements or direction are not specifically included or amended by the Contract Documents. Unless otherwise noted, the most recent versions shall be used:

1. *An Informational Guide for Roadway Lighting.* American Association of State Highway and Transportation Officials (AASHTO).
2. *American National Standard Practice for Tunnel Lighting.* Illuminating Engineering Society of North America (IESNA). Publication Number RP-22-96.
3. *American National Standard Practice for Roadway Lighting.* Illuminating

Engineering Society of North America (IESNA). Publication Number RP-8-00.
4. *Roadway Lighting Design Guide.* American Association of State Highway and Transportation Officials (AASHTO). Publication Number GL-6.
5. *Roadway Lighting Handbook.* Federal Highway Administration (FHWA).
6. *Lighting Handbook.* Illumination Engineering Society (IES).

As mentioned above, this document is not meant to offer information on how to design Lighting and Power Distribution Systems. Freeway, Interchange, and other Lighting Systems shall be designed utilizing the procedures found in AASHTO Publication GL-6 *Roadway Lighting Design Guide* and the other reference publications listed above, and power distribution components of the lighting system(s) shall be designed in accordance with standard industry practice, codes, and sound engineering judgment.

This document lists design and plan preparation requirements that are specific to the needs of the Authority. In case of any discrepancies between any other design guide and this document, the direction given in this document shall govern. Submitted designs will be reviewed according to the requirements of this document and the other recommended practices in the reference publications.

Where Authority-sponsored projects disrupt, modify, or install lighting systems for other stakeholders, other codes and standards may apply. The Design-Build Team shall determine at the start of the project, any additional codes and/or standards, and design manuals which may apply, and shall submit a summary of the findings for review prior to any actual system design. If the various stakeholders do not dictate an alternate method for design or construction, the procedures and criteria listed herein shall apply.

LIGHTING SYSTEM DESIGN

Required Lighting Systems

This section defines the various lighting systems that are required as a part of this project, details where they are required, and what equipment shall be installed for each system.

For specific design and installation requirements, see Section 3 below.

Freeway Lighting

Continuous Freeway Lighting is a “system [that] provides relatively uniform lighting on all mainline lanes and direct connections, and complete interchange lighting of all interchanges within the section.” (AASHTO, GL-6)

Equipment used for Continuous Freeway Lighting shall be Pole-Top Light Standards, installed adjacent to the freeway mainline lanes according the requirements below and elsewhere in the Contract Documents.

Interchange Lighting

Where interchange lighting is required on Authority roadways, it shall be Complete Interchange Lighting (CIL). CIL is "a lighting system that provides relatively uniform lighting within the limits of the interchange, including mainline lanes, direct connections, ramp terminals, and frontage roads or crossroad intersections." (AASHTO GL-6)

The limits of the interchange shall be defined as shown on the Lighting Design Requirement Drawings.

All roadways within the limits of the interchange shall be lighted, including the following:

1. Acceleration Lanes
2. Deceleration Lanes
3. Mainline Lanes – continuously lighted between the limits of the interchange
4. Ramps and Direct Connections – continuously lighted from the connection to the freeway mainline through their termini at the limits of Authority jurisdiction
5. Ramp Terminals
6. Intersections at Frontage and/or Cross Roads
7. Toll Plazas within the interchange

Equipment used for Interchange Lighting Systems shall be a mix of High Mount Standards and Pole-Top Light Standards, installed according the requirements below and elsewhere in the Contract Documents.

Bridge Lighting

Lighting shall be provided on bridges only where interchange or freeway lighting is required – for example, where bridges occur in an interchange where complete interchange lighting is installed.

Lighting of bridges and overpasses shall be at the same level as the adjoining roadways.

If possible, lighting of bridges within interchanges shall be by High Mount Standards. Pole-Top Light Standards shall be used where the lighting design requires fixed lighting equipment to be mounted on bridge or wall structures.

Underpass Lighting

Underpass Lighting shall be provided only where interchange or freeway lighting is required, but proper lighting levels and uniformity cannot be achieved with ground-mounted light standards. This is often due to project-specific geometric considerations such as length of overpass, or orientation of structures relative to various roadways.

Lighting of underpasses shall be at the same level as the adjoining roadways.

Equipment used for Underpass Lighting Systems shall be either pedant-mounted or wall-mounted underpass luminaires, installed according the requirements below, and elsewhere in the Contract Documents

Site / Parking Lighting

All areas around buildings and other Authority facilities that are intended for use by pedestrian traffic (i.e. sidewalks, parking lots, crosswalks, etc.), or required for building security (as determined by the Authority) shall be illuminated.

Lighting for building entrances, sidewalks, and areas immediately around buildings shall be mounted to the building, if possible. All fixtures used on the site shall be full-cutoff and International Dark-Sky Association (IDA) compliant. Additional requirements for all lighting mounted on and in buildings/facilities shall be in accordance with the Design Criteria for that building/facility.

Lighting for parking lots and other larger areas shall be achieved as follows:

- Where these areas are adjacent to, or part of, Authority roadways where lighting is required to be installed by the Contract Documents, the equipment used shall conform to that lighting system. For example, toll plaza parking areas adjacent to Cash Lane Toll Plazas shall be included in the Pole-Top Light Standard System as designed for the Toll Plaza.

- Where these areas are not adjacent to other Authority lighting systems and cannot be adequately illuminated with lighting mounted to a building/facility, a separate Pole-Top Light Standard system shall be installed according the requirements below and elsewhere in the Contract Documents.

Adaptation / Transition Lighting

Adaptation / Transition lighting shall be provided to prevent unnecessarily abrupt or frequent transitions between light levels on the roadway. Lighting shall be designed and installed on all roadways:

- Between lighted and unlighted areas that are less than 1000 feet apart (i.e. between two closely spaced interchanges).
- Areas of different brightness at the interface between two different lighting systems (i.e. adaptation lighting between an interchange lighting system and a brighter toll plaza lighting system).
- Areas of different brightness within a lighting system due to constraints on location of lighting components.
- Areas where lighting is required to transition to lighting systems maintained by other jurisdictions.

Adaptation / Transition lighting shall be designed and installed in accordance with the requirements for Freeway, Interchange, and Toll Plaza Lighting Systems, listed above, as required for the type of roadway under consideration.

Aesthetic Lighting

Aesthetic lighting is defined as lighting which is meant to be decorative and not used to illuminate any site, roadway, or facility for safety concerns. The following aesthetic lighting systems shall be installed:

- No Aesthetic Lighting Systems are required unless identified in the Statement of Work.

Temporary Lighting

Design and construction sequence of the lighting system(s) should be arranged so that the permanent lighting installations will be completed and in operation when the new roadways / facilities are opened to the public. If this cannot be accomplished, temporary lighting shall be provided for these roadways / facilities at no expense to the NCTA. All installations which are required to be removed at the end of the construction should be of temporary nature.

Illumination levels and uniformity requirements for temporary lighting systems shall be as prescribed below for permanent lighting systems. A temporary lighting system shall produce a level of illumination equal to that of a permanent system. However, physical arrangements and equipment criteria are modified to enable an abbreviated and less costly installation. Maintainability, constructability and safety considerations should not be compromised in temporary lighting systems. The Design-Build Team shall perform all design associated with Temporary Lighting System(s) and submit to the Authority for approval.

Local Road Overpass / Underpass Lighting

Lighting shall not be provided on local road overpasses unless required as part of the Interchange Lighting System.

Lighting shall not be provided on local road underpasses unless required as part of the Interchange Lighting System or Tunnel Lighting System.

Design Criteria

The Authority utilizes an Illuminance method for the design of all lighting systems, except as required by the IESNA publications for Roadway Tunnels. Illuminance levels shall be in accordance with the following criteria, shown in the table below.

Table of Illumination and Uniformity Requirements

Usage Classification	Minimum Average Maintained Illuminance (foot-candles)	Maximum Average Maintained Illuminance (foot-candles)	Minimum Point Illuminance (foot-candles)	Maximum Uniformity Ratio (Avg./Min.)[1]
All Roadways unless otherwise noted, including Mainline Lanes, Ramps, Direct Connections, Merge Areas, Acceleration Lanes, Deceleration Lanes	0.70	0.90	0.20	4.0:1
Toll Plaza – Toll Collection Zone[2]	2.30	2.50	0.60	4.0:1
Toll Plaza – Approach Zone[2]	See Footnote [5]			4.0:1
Toll Plaza – Departure Zone[2]	See Footnote [5]			4.0:1
Toll Plaza – Canopy[4]	15.00	20.00	10.00	1.5:1
Service Areas/Parking Areas[3]	1.75	2.25	0.50	4.0:1
Underpasses	To match roadway classification adjacent to the underpass			
Roadway Tunnels	See the *IESNA Recommended Practice for Tunnel Lighting*			
Other Areas	See the IES *Lighting Handbook*			

Footnotes:

[1] Higher uniformity values will be acceptable for elevated ramps near High Mount Standards.
[2] For definition of Toll Collection, Approach, and Departure Zones, see Toll Facility Geometry and Signing Design Requirement Drawings.
[3] Where Parking Areas are adjacent to Toll Plaza Zones, lighting shall be designed in accordance with the requirements for Toll Plazas.
[4] The calculation zone for the Toll Plaza Canopy shall be coincident with the projection of the toll plaza canopy onto the roadway surface.
[5] Lighting for Approach and Departure Zones shall transition in three steps of uniform length from the higher illuminance level of Toll Plaza Collection Zone to the lower illuminance level of the roadways adjacent to the Approach / Departure Zone. See Lighting Design Requirement Drawings for more information.

Outside Authority jurisdiction, illuminance levels and appropriate uniformity requirements for roadways and parking areas shall be as determined by the owner of each property or facility. Lighting levels on all local/county/state-owned roadways shall be designed in accordance with the current NCDOT design criteria, unless otherwise directed by the Authority. At the jurisdictional limits of Authority right of way, all Authority-owned lighting systems shall be designed to transition appropriately to the light levels of the adjacent lighting system, if such system exists or is being designed concurrently with the project lighting system.

All lighting calculations shall be performed utilizing a Combined Light Loss Factor (also

referred to as Maintenance Factor) to account for degradation of light output due to bulb losses, equipment tolerances, and dirt accumulation. Light Loss Factors shall be as follows for all projects:

Table of Light Loss Factors

Facility	**Light Loss Factor**
Authority Roadways and Facilities	0.72
Other Authority Facilities Considered Dirty[1]	0.68
Local, County, and State (NCDOT) Roadways	Per NCDOT requirements
Other Areas outside Authority jurisdiction	Per property owner
Footnotes:	
[1] Area shall be considered "dirty" if environmental factors (i.e. soot, exhaust, dirt, etc.) are expected to accelerate depreciation of lamp lumen output relative to an average installation.	

Calculation Method

This Subsection lists the specific requirements to be used when performing illuminance calculations for Authority projects. These methods are used for most freeway, interchange, site, sign, underpass, and other lighting systems. For details of the luminance calculation methods required for certain Tunnel Lighting installations, see the *American National Standard Practice for Tunnel Lighting* (Illuminating Engineering Society of North America)

Calculations shall be submitted for all areas where lighting systems are required (as described above).

Software and Setup

1. All illuminance calculations shall be performed using the Acuity Lighting Brands, Inc. lighting calculation software called Visual™ Professional Edition, latest version. This is the industry-standard program used for review of lighting calculations. The Design-Build Team may propose use of an alternate lighting calculation program. However, before an alternate program is approved for use on a Project, the Design-Build Team shall furnish the Authority with three (3) permanent full-service licenses to the program, and shall provide one (1) day of training to three (3) people as designated by the Authority on the use of the program. Any alternate program used shall be capable of calculating illuminance based on both direct and reflected components, shall be capable of three-dimensional analysis, and shall utilize a graphical user interface for data input and analysis.

   The Visual™ lighting software shall not be used for luminance calculations, as is required for such installations as Tunnel Lighting. The Design-Build Team shall submit for approval a calculation program to be used for all luminance

calculations prior to design of any lighting equipment. Set up of files and the computational method used by the program shall be as described in IESNA RP-22-96.

2. The Design-Build Team shall import the Release for Construction (RFC) roadway plans and information into the calculation software, and shall use this as a basis for all calculations. At a minimum, stationing, striping, and utilities shall also be included. All structures and obstructions which may impact light levels shall be included, as well as all existing light standards that will remain after construction.

3. For complex interchanges, the Design-Build Team shall use three-dimensional modeling and/or creation of obstructions and surfaces within the file to model the effects of bridges, grade-separations, and/or other structures which may interfere with ideal lighting conditions. It shall be permissible to approximate areas of variable grade with multiple stepped "flat" calculation zones, each of as large a size as possible, provided that the method used does not introduce a significant error into the calculations. This work shall be submitted for review and approval by the NCTA.

4. To reduce coordination and possibility of cross-referencing errors between multiple lighting calculation files, the calculations for each lighting system shall be performed in a single lighting file. Any calculations submitted for review as multiple files without prior approval by the Authority shall be returned without further review, and resubmission will be required.

5. All calculations shall be performed in U.S. Customary units (lumens, feet, foot-candles).

Calculation Zones

1. Calculations zones shall be defined between pavement edges for the areas that are required to be illuminated. Calculation zones shall be constructed using the Polygon method, and shall closely match all curved geometry of the base drawing so as to ensure that no calculation points are unintentionally omitted. Each section shall be analyzed using a separate calculation zone, and multiple calculation zones shall be allowed. Use of statistical zones shall not be permitted. Calculation zones shall be defined as large as possible given the above criteria for ease of design and review.

2. Unless otherwise noted in the "Roadway Lighting" section of this scope of work, the calculation zone shall cover all areas of future widening as detailed in the Roadway Scope of Work. For example, where future one-lane widening toward the median is expected, the calculation zone shall be extended beyond the limits of initially installed pavement to the centerline of the roadway. In this way, future projects will not require lighting modifications.

The Design-Build Team shall obtain written direction from the Authority indicating areas of expected future widening for use in the design.

3. In order to facilitate review of the calculations, calculation zones shall be named to match the area being calculated, or roadway station points. Multiple colors shall be used to differentiate between zones. Minimum and maximum values shall be displayed in a different color than the main calculation zone points.

4. Calculation zone accuracy shall be set to hundredths (double-digit decimal "0.00" accuracy). Point spacing for all calculation zones shall be 5 feet transversely and longitudinally.

5. Calculation zones shall be defined for all residential lots, and shall be named "Residential Area" for review of the light trespass outside Authority facilities in accordance with the requirements under the Design Considerations section below. The target maximum lighting levels in these areas shall be 0.10 foot-candles. If more than one residential area exists, or if residential areas are separated such that they cannot be defined as one area, then each residential area shall be numbered logically following "Residential Area 1", "Residential Area 2," etc.

6. Masking or deletion of individual calculation points shall not be permitted. The only exception is that masks will be allowed for large parking areas – for example, to exclude a gas station or building from the overall calculation zone.

Luminaires and Photometrics

1. Luminaire definitions shall be created using .IES photometric files for fixtures matching the Specifications.

2. IES photometric files used in calculations for existing and/or proposed equipment shall be as per the manufacturer's direction for the specific equipment. Manufacturer, fixture type, and photometrics shall be determined by field investigation, review of As-Built plan (if applicable), coordination with equipment owner, or similar method. "Approximate" photometrics files will not be accepted.

3. Tilt values and optical rotations in the luminaire definition shall be set to zero degrees. All tilts shall be applied to the individual luminaires / light standards.

4. Mounting height of luminaires shall be the actual mounting height as shown in the Contract Documents, rounded to the nearest foot to simplify data entry.

5. Symbols in the Luminaire Schedule shall be defined accurately and to scale. Arm lengths, where required for each Light standard, shall be defined to match those shown on the Standard Drawings.

6. The Design-Build Team shall ensure that the location and types of luminaires and light standards are consistent between all calculations files and the plans developed for construction of the lighting system.

7. All light sources within three (3) mounting heights of any calculation zone shall be included in the calculations. This includes all light sources, including utility, site, and other lighting that is not on Authority property. For example, if a utility light on a 30-foot pole is near Authority property, it shall be included in the design as a contributing light source if it lies within 3 x 30 = 90 feet of any calculation zone.

8. Lamp Lumen values shall be as shown on the Design Requirement Drawings and *2006 NCDOT Standard Roadway Drawings*. These lumen values should be used even if the .IES photometric files are imported with different (manufacturer specified) values. Only clear lamps shall be utilized on Authority projects. Lumen values for lamps of other types that are used in calculations shall be as reported by the manufacturer of the lamp.

Additional Considerations

Calculations shall also be provided for each stage of construction, where temporary roadways or lighting systems are in use.

Selection of Lighting Equipment

Policy on Light Trespass and Environmental Impact

In the design of lighting systems, the level of light and the effect of glare shall be primary concerns. A glare-free environment shall not be compromised in the interest of economy, nor shall higher light levels be permitted where not required by the Contract Documents. Special attention shall be exercised to ensure cutoff type luminaires are utilized to the maximum extent possible, that luminaire tilts (where allowed) are minimized, and that consideration to control glare is given to all design applications.

The lighting systems shall be designed to efficiently and properly illuminate only those areas that require lighting as defined in the Contract Documents. Care shall be taken to minimize spill light into areas that do not require illumination, including both areas inside and outside Authority right of way, unless otherwise directed.

Lighting on all residential areas shall be kept to an absolute minimum. The Authority maintains a target level of 0.10 foot-candles maximum on any residential properties. The Design-Build Team shall use appropriate luminaire selection and location, and additional shielding or other devices to minimize spill light in all areas where lighting is not required. During review of the lighting design, the Authority reserves the right to require the Design-Build Team to resubmit the lighting design if it feels that a more efficient

method or placement of luminaires may yield less spill light in areas outside the right of way.

The Design-Build Team shall investigate the environmental impacts of all lighting installations, especially on residential property, sensitive environmental areas (wetlands, waterways, etc.), and glare/light pollution and shall prepare a report submitted to the Authority for review before completion of design. The report shall include a written description of the lighting design, including justifications for why the various equipment and locations were chosen, to describe the process used to minimize light trespass.

Long-term Cost-Benefit Analysis (10 years)

The Design-Build Team shall perform a comprehensive cost-benefit analysis of all lighting system Installations where various options exist for the design (for example, between High Mount Standards and Pole-Top Light Standards, or when considering multiple Light Control Systems for a single interchange). This cost-benefit analysis shall take into consideration maintenance cost, installation cost, and energy usage, and shall be used in making a recommendation of proposed design.

The Design-Build Team shall submit the cost-benefit analysis for approval by the Authority prior to design of lighting systems.

Equipment

The Authority currently utilizes and maintains two types of roadway lighting equipment for use where Freeway, Interchange, Toll Plaza, Bridge, and Site/Parking lighting systems are required. These systems are designated below, with brief descriptions of the major system features:

1. High Mount Standards – High Mount Standards utilize high-wattage fixtures at mounting heights of 80, 100, or 120 feet, and shall be used to light large areas with a minimum of poles. Luminaire wattages shall be 400- , 750- or 1000-Watt.

   For High Mount installations, luminaires shall be arranged in a ring of up to twelve (12) full-cutoff luminaires (useful for symmetrical lighting of areas such as the roadways in a complex interchange). High Mount Standards feature a luminaire ring assembly that can be lowered through operation of a winch at the tower pole base, allowing for relamping from the ground level.

   All proposed tower lighting installations shall utilize lowering devices as shown on the *2006 NCDOT Standard Roadway Drawings*, as amended by the requirements of the Contract Documents as defined above.

2. Pole-Top Light Standards – Pole-Top Light Standards shall utilize full-cutoff Pole-Top luminaires that are designed to be mounted on poles without the traditional bracket arms. Special luminaire mounting adapters are installed on the

top of each pole, and the luminaire is installed and attached. Unless required to mitigate other environmental factors such as light trespass and approved for use by the Authority, standard pole heights used shall be 45'.

Tilt angle of Pole-Top Luminaires shall be zero (0) degrees unless permitted elsewhere by the Contract Documents.

Selection of Equipment

This section contains requirements for the Design-Build Team to take into account when performing system design, as well as requirements where the various lighting equipment shall be permitted to be installed.

1. High Mount Standards shall be considered first for large, complete interchange lighting systems. A High Mount system is ideal for large area lighting applications, where it may offer distinct illumination and economical advantages over the other system types. High Mount Standards shall be installed only in "in-field" areas that are surrounded by roadways that are required to be lighted as part of the lighting system, unless approved by the Authority.

2. Pole-Top Light Standards shall be used only where High Mount Standards cannot be used due to any of the following reasons:

    a. Design with High Mount Standards cannot meet the Authority's standards for Light Trespass and Environmental Impact (above).
    b. Sufficient right of way is not available for installation.
    c. Pole-Top Light Standards are specifically required by the Contract Documents (for example, for Complete Freeway or Mainline Toll Plaza Lighting Systems).
    d. Pole Top Light Standards are less expensive to maintain (as determined by the Cost-Benefit Analysis, see above).

    Pole-Top Light Standards shall be permitted to be installed on roadway shoulders, or in the roadway median provided future widening is not anticipated, and the inner shoulder is at least 12 feet in width to allow for maintenance operations.

    Pole-Top Light Standards have been installed on roadways and toll plazas as wide as 10 lanes with optimal results, and shall be as described for all installations, unless the Design-Build Team can demonstrate that Authority lighting Design Criteria cannot be met.

3. High Mount Standards shall be permitted to be installed in the same project areas as Pole-Top Light Standards to realize the efficiency gained by the High Mount Poles when they cannot be used on all areas of a lighting system. For example, at most interchanges it is understood that the ramps and direct connections will be lighted primarily with High Mount Standards, while the mainline lanes near the

limits of the interchange will be lighted with Pole-Top Light Standards. See the Lighting Design Requirement Drawings for additional direction and illustration.

4. Any existing or proposed roadway lighting equipment that impacts the roadway lighting system under design shall be considered in the analysis, discussion, recommendations, and calculations.

5. Where non-standard or legacy equipment is encountered during improvement projects, it shall be replaced or upgraded to meet the Authority's current standards of construction, including associated power and distribution systems or other components.

Design Considerations

The Design-Build Team shall work to ensure that all lighting designs meet the following basic criteria in order to achieve a superior and economical lighting system. These criteria are presented in order of the Authority's preference (Number 1 being the most important). Where it is not possible to satisfy all criteria for the entire installation due to project-specific constraints, the Design-Build Team shall utilize this ranked list to make decisions regarding tradeoffs between various project elements. Where any of the following criteria cannot be met for a given installation, the Design-Build Team shall include a discussion in the appropriate Design Submission, for final approval by the Authority.

1. Uniform Lighting – The Design-Build Team shall ensure a uniform distribution of lighting intensities that fall within Authority Design Criteria, and shall achieve this throughout the entire system unless specific Design Criteria have been modified through the process described above.

2. Responsible Installation – The Design-Build Team shall utilize the most environmentally-friendly solutions that reduce light pollution and ongoing energy consumption.

3. Planned Maintenance – The Design-Build Team shall choose equipment locations that require the least amount of preventative and periodic maintenance in terms of manpower and cost. Equipment locations selected shall be easily accessible for maintenance.

4. Economical Installation – The Design-Build Team shall optimize initial construction costs and ongoing power consumption costs for the entire system.

5. Aesthetically Pleasing – The Design-Build Team shall provide an installation is pleasing and symmetrical in appearance to passing motorists. Lighting installations should not look out of place or be visually objectionable to a public patron who is not trained in the specifics of lighting design, and may not know the engineering reasons why certain options may be preferable if aesthetics are not a

consideration. In general, light standards shall be aligned or evenly staggered, with relatively uniform height to achieve an acceptable aesthetic appearance.

Verification of Design

After the completed lighting system has been constructed, the Design-Build Team shall perform a verification of the lighting installation to ensure that each lighting system has been installed according to the design. This verification shall be required before the Authority issues final acceptance for any lighting system.

Procedure

The Design-Build Team shall overlay a grid with a maximum point spacing of 50 feet on a site plan of all lighted areas, and shall take light readings at each point. A plan of actual light reading values shall be created and compared to the computerized calculations prepared for project design, using a Light Loss Factor of 1.00 (at initial installation, lighting has not yet depreciated). If any discrepancies are found in the light readings in the field as compared to the design values (average, uniformity, minimum values), the Design-Build Team shall determine the source of discrepancy and correct the problem accordingly. The Design-Build Team shall repeat the light readings and corrective action until satisfied that the installed system(s) match the lighting design. Typical issues causing non-compliance of installed system that may be encountered are improper aiming of luminaires, incorrect luminaire wattages, and incorrect tilts on fixtures.

Submissions

After any problems are reconciled, the Design-Build Team shall then submit two (2) copies of the following to the Authority for release of the lighting system:

1. Plan showing actual light values for all lighted areas in the project, with readings taken at a maximum of 50 foot point spacing
2. Full-size color prints at the same scale as the light-reading plan, showing the theoretically derived lighting levels with a Light Loss Factor of 1.00.
3. A letter, signed and sealed by a Professional Engineer licensed in the state of North Carolina, verifying that the lighting system was installed to design, meets all design criteria, and that the light levels are within satisfactory tolerances.

MATERIALS, DESIGN, AND INSTALLATION REQUIREMENTS

General Design and Installation Requirements

The following guidelines shall pertain to all aspects of the lighting system design.

1. All equipment shall be installed where it can be accessed and maintained. All light standards and items adjacent to active roadways shall be installed in a location where there is at least a 12’ shoulder, and maintenance personnel may

park vehicles and obtain access to the equipment without need for lane closures.

2. A flat working surface of at least four feet shall be provided in all directions around all electrical equipment.

3. Equipment shall not be installed within drainage swales, basins, or structures that are expected to retain water, except as follows:

    a. High Mount Standards – where the foundation is designed at least 1 foot above high water line, and a raised pathway above the high water line is provided for maintenance access at when the structure is not dry
    b. Electrical Duct and Feeder Circuits – shall be permitted to cross only where there is not another option that does not run through said structures.

4. All similar items proposed and installed shall be by the same manufacturer or fabricator. It shall not be permissible to mix manufacturers. For example, if Pole-Top Luminaires are supplied on a project, all fixtures, regardless of wattage or optical distribution shall be by the same manufacturer.

5. With the exception of breakaway light standards and underground equipment, all ground-mounted equipment shall be located outside the roadway clear zone as defined by the AASHTO *Roadway Design Guide*.

High Mount Light Standards

Materials and Construction Methods

High Mount Standard materials and installation shall be as per *2006 NCDOT Standard Specifications for Roads and Structures*, as amended above. Types to be used on all projects are as follows:

1. 80-foot High Mount Standard for mounting of 4, 6, 8, or 12 luminaires
2. 100-foot High Mount Standard for mounting of 4, 6, 8, or 12 luminaires
3. 120-foot High Mount Standard for mounting of 4, 6, 8, or 12 luminaires

Design Requirements

1. High Mount Standards shall be 80-, 100-, or 120- foot-high towers equipped with four to twelve 400, 750, or 1000 Watt luminaires as shown on Contract Documents. The Design-Build Team shall select from these options given the unique nature of each lighting design. The number and types of fixtures provided on a given project shall be kept to a minimum. To yield efficient designs, higher towers shall be used where possible.

2. High Mount Standards shall be located free of the clear zone (usually 30 feet on most roadways) or protected by physical obstruction. Installation shall preferably

be a minimum of 50 feet from the travel lane of any roadway (ramp, loop, mainline, etc.).

3. Unless otherwise directed, all High Mount Standards shall be designed with lowering devices, a top-latching assembly, lightning protection, proper grounding, guide rollers to prevent swaying while the luminaires are being lowered, and a method to safely prevent the ring or floodlighting assembly from rotating or moving unexpectedly when lowered for relamping.

4. See the Contract Documents section (above) for additional requirements regarding design parameters and method of design.

High Mount Luminaires

Materials and Construction Methods

High Mount Luminaire materials and installation shall be as per *2006 NCDOT Standard Specifications for Roads and Structures*. Types to be used on all projects are as follows:

1. 400 Watt IES Type V (Symmetric) High Pressure Sodium
2. 750 Watt IES Type V (Symmetric) High Pressure Sodium
3. 1000 Watt IES Type V (Symmetric) High Pressure Sodium

Design Requirements

1. All luminaires on each High Mount Standard shall be identical in wattage and optical distribution.

2. All luminaires shall be full-cutoff.

3. All luminaires shall be Type V Symmetric distribution.

4. High Mount photometric requirements shall be as described in the *2006 NCDOT Standard Specifications for Roads and Structures*.

5. All High Mount Luminaires used on the project shall be by the same manufacturer, regardless of IES Type and wattage used.

6. The number of various types of luminaires shall be kept to a minimum on each project, for ease of maintenance.

Pole-Top Light Standards

Materials and Construction Methods

Pole-Top Light Standard materials and installation shall be as per *2006 NCDOT Standard Specifications for Roads and Structures* as amended above. All references of "bracket arms" shall be replaced with "luminaire mounting assemblies." Types and sizes to be used on all projects are as follows:

Ground-Mounted Pole-Top Light Standards

a. Type MTLP 45 SINGLE – Light Standard with 45-foot mounting height, breakaway base height, luminaire mounting assembly, and one (1) Pole-Top Luminaire

b. Type MTLP 45 DOUBLE – Light Standard with 45-foot mounting height, breakaway base height, luminaire mounting assembly, and two (2) Pole-Top Luminaires

Other heights and styles shall be used only where specifically noted in the Contract Documents or directed by the Authority.

Design Requirements

The Design-Build Team shall locate Pole-Top Light Standards in accordance with standard industry practice to meet the design requirements stated herein and the following Authority-specific requirements:

1. Light standards shall be arranged in one of the following four (4) methods; one-sided, opposite, staggered, median. An illustration of these arrangements follows:

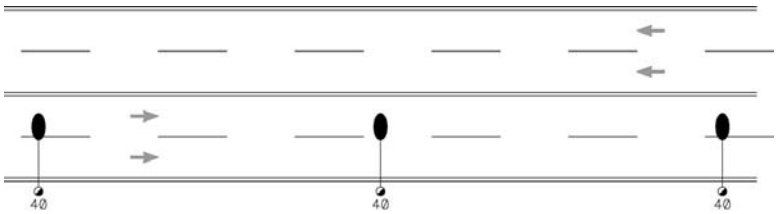

ROADWAY LIGHTING - ONE SIDE

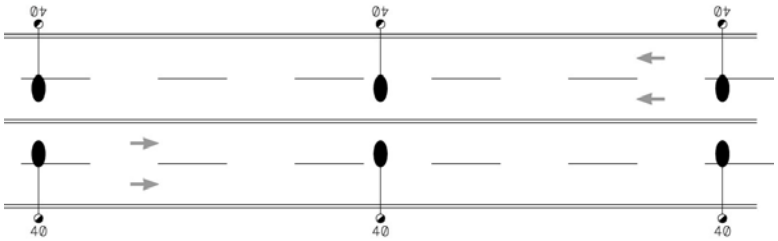

ROADWAY LIGHTING - OPPOSITE

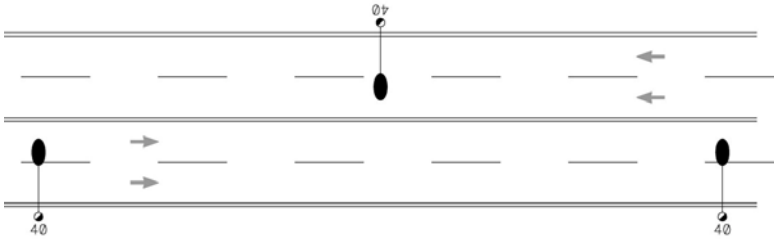

ROADWAY LIGHTING - STAGGERED

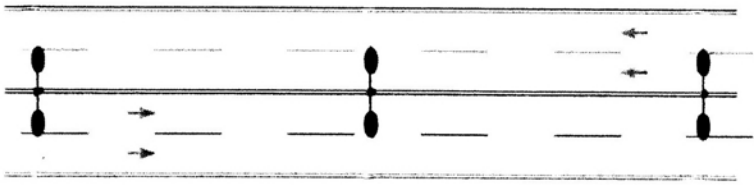

ROADWAY LIGHTING - MEDIAN

Selection of the method shall be based on the engineering analyses shown to produce the most effective and economical lighting system. The Design-Build Team shall analyze all installation methods to determine the recommended scenario, and shall describe the analysis as part of the submission report. Except where non-symmetrical geometry is encountered, lighting shall be evenly spaced to yield a pleasing visual appearance.

2. Light standards shall be located along the wide shoulder (10 ft. and 12 ft.) edge of all ramps and mainline roadways in order to facilitate maintenance and re-lamping.

3. When a light standard is to be located within the vicinity of an exit gore area, a minimum of 50 ft. clearance should be provided beyond the physical bullnose.

4. Light standards adjacent to overpasses shall be located so as to avoid glare affecting traffic on overpasses. Additionally, light cutoff angles produced by structural members should be analyzed when locating such light standards. Preferably, the light standards should be located equidistant from overpass structures. If this cannot be achieved, a minimum clearance of 50 feet shall be provided from the face of parapet.

5. Light standards adjacent to overhead sign structures should be located equidistant from such structures, if feasible, otherwise minimum clearance requirements set forth for the overpass structures shall be provided.

6. One-sided light standard arrangements (see above) shall be used in Ramp Toll Plazas and Mainline Toll Plaza Cash Lanes.

7. Light Standards shall be installed on NCDOT Standard Foundations. Each light standard shall be provided with an Electrical Junction Box adjacent thereto for

cable splicing, unless another junction box within the proximity of the light standard (up to 50 feet away) can be used for this purpose.

8. The design should avoid placement on bridges if possible. However, when unavoidable, light standards on bridge structures shall be located near piers or abutments in order to reduce undesirable vibration affecting the lamp life. Circuitry under these circumstances is recommended to be attached to a messenger system underneath the outside bay. Mid-span locations (light standards mounted within the middle half span of the bridge) shall be avoided whenever possible. All bridge-mounted light standard mounts shall be capable of supporting all standard Authority poles, up to a height of 45 feet.

9. Light standards shall be installed outside the utility company's right-of-way such that they are located not closer than 20 feet to primary or secondary utility power lines or communication facilities that are mounted to wood or other utility poles. The Design-Build Team shall take into consideration the requirements of the National Electric Safety Code when designing lighting systems in the vicinity of power distribution lines. Additionally, the Design shall take into consideration the likelihood of pole knockdowns by vehicle impact, and ensure that no other critical facility may be rendered inoperable in the event of an accident.

10. The number of various types light standard assemblies shall be kept to a minimum on each project, for ease of maintenance. Runs of adjacent light standards shall be of the same type. The Design-Build Team shall not alternate light standards types, heights, or constructions, or install small quantities of non-matching light standards in a string of otherwise identical poles, unless there is a valid engineering reason why such a design is required in lieu of other, more standardized designs.

11. Lighting designs for Control of Access areas may include twin luminaires mounted on the median barrier.

12. The offset used for light standard installation shall be as shown on the Lighting Design Requirement Drawings. Where longer offsets are required to achieve the Authority's lighting design criteria, these offsets shall be clearly marked on any installation plans to ensure that the light standard are installed in the proper location.

13. Luminaire mounting assemblies shall not be mounted on signal poles in lieu of pole-top light standards.

Pole-Top Luminaires

Specification

The following specification shall be used for Pole-Top Luminaires. This specification

shall supersede the North Carolina Department of Transportation Specification Section 1406 for Light Standard Luminaires.

1. DESCRIPTION

   Furnish, install, and place into satisfactory operation, pole-top luminaries complete with lamps, ballasts, direct pole mount with integral offset, wiring inside standard from circuit conductors to luminaries, in-line breakaway fuses and ground wiring at the pole on light standards less than 75' in height.

2. MATERIALS

Use luminaries that are ellipsoidal shaped, with a center of gravity not more that 18" from the end of the luminaire support, do not weigh more than 55 pounds, and have a maximum effective projective area (EPA) of 2.2 square feet. Housings shall be die-cast aluminum with electrostatically applied polyester powder coat paint.

Use luminaries that are UL listed and labeled.

All fixtures provided shall be full-cutoff.

Access to luminaire internal components shall be by a holder door that can be opened without tools. All doors on all luminaires provided shall be interchangeable. Capacitor and other electrical components shall be rated for a life of at least 50,000 hours. It shall be possible to replace all internal components as a unit, including ballast, starter, and capacitors, within a 60-second period of time. This may be achieved by the components mounted to a door that is removable and replaceable, or similar means.

All external hardware shall be corrosion resistant.

The luminaire shall have a slipfitter for vertical tenon mounting as shown on the Lighting Design Requirements Drawings, with continuous tilt adjustment from zero to five degrees. Greater tilts (to 15 degrees) may be utilized for Pole Top type luminaires with prior approval from the Authority.

Use luminaries with a replaceable porcelain mogul base lamp socket adjustable in both vertical and horizontal directions, which prevents lamp vibration and backout.

The fixture shall be capable of producing the specified IES distribution standard and performance requirements detailed below. Third party certification for photometric data shall be provided upon request. A heat-resistant tempered flat glass lens shall be provided, with a reflector with a hard glasslike highly reflective corrosion resistant finish. A filter shall be provided between the lens and the reflector hub. The fixture shall be internally gasketed and sealed against dust and dirt.

Use luminaries that have an internal high power factor ballast of the regulated type,

capable of operating from a multi-wire circuit and energize a high intensity discharge lamp. The luminaire shall have a barrier between the ballast compartment and the reflector tub. Transformer windings shall be covered and protected. Lamps shall operate satisfactorily with a line voltage variation of +/- 10%. Provide ballast pre-wired to the lamp socket and terminal board, requiring only the connection of the power supply leads to the terminal board.

Requirements of the luminaires shall be as follows:

a. Wattage – 250 or 400 Watt
b. Light Source – High Pressure Sodium
c. Voltage – 480 Volts or as required by the design
d. Tilt Range – Low Tilt (0 to 15 degrees range)
e. Mounting – Vertical, on 2” tenon
f. Color – Gray
g. Options – Protected Starter, fusing provided at base of standard. Breakaway fuse holders are required for standards with breakaway features.

Types of Pole-Top Luminaires to be used on the project are as follows:

- IES Type II Narrow Roadway
- IES Type III Wide Roadway
- IES Type IV Forward Throw

Performance Criteria for each luminaire shall be as follows, using calculation methods as detailed in the Lighting Design Criteria:

Luminaire Designation	IES Type II	IES Type III	IES Type IV
Description	Narrow Roadway	Medium / Wide Roadway	Forward Throw / Extra-Wide Roadway
Shall be able to light of Roadway of:			
Roadway Width	40 feet	70 feet	100 feet
According to the following criteria:			
Average illumination	0.7 to 0.9 foot-candles	0.7 to 0.9 foot-candles	0.7 to 0.9 foot-candles
Uniformity (Average / Minimum Illumination)	less than 4.0:1	less than 4.0:1	less than 4.0:1
Combined Light Loss Factor	0.72	0.72	0.72
Mounting Height	45 feet	45 feet	45 feet
Offset from Roadway edge (see Details on L5 & L6)	3.5' minimum behind guardrail 15' w/o protection	3.5' minimum behind guardrail 15' w/o protection	3.5' minimum behind guardrail 15' w/o protection
Pole Arrangement	One-Sided	One-Sided	One-Sided
Pole Spacing	greater than 275 feet	greater than 190 feet	greater than 160 feet
Wattage	400 Watts	400 Watts	400 Watts

The performance criteria above have been developed specifically for 400 Watt luminaires. Where 250 Watt luminaires are required, the fixtures shall be in all cases identical to the 400 Watt fixtures, including housing, reflector, glass, geometry, photometric, etc., and shall be permitted to vary in construction only in ballast components and the bulb provided. It is anticipated that 250 Watt luminaires will be appropriate for most NCDOT roadway lighting applications in areas where necessary for Control of Access and will achieve substantial energy savings.

3. CONSTRUCTION METHODS

   Date lamps using the date code on the base and install just prior to the system being ready for testing.

   Level luminaries using leveling pads on the luminaries' enclosure. Adjust any luminaries, as directed to give optimum illumination distribution.

Design Requirements

The Design-Build Team shall select Pole-Top Luminaires and mount the luminaires to Pole-Top Light Standards satisfy the various design criteria, directives, and installation requirements for Light Standards above. The following Authority-specific requirements

shall also apply:

1. Each luminaire shall be individually protected by means of a fused cable connector kit, installed as indicated on the Contract Documents.

2. The number of various types of luminaires shall be kept to a minimum on each project, for ease of maintenance. Runs of adjacent luminaires shall be of the same type. The Design-Build Team shall not alternate wattages, manufacturers, or optics, or install small quantities of non-matching luminaires in a string of otherwise identical luminaires, unless there is a valid engineering reason why such a design is required in lieu of other, more standardized designs.

3. All Pole-Top Luminaires used on the project shall be by the same manufacturer, regardless of IES Type and wattage used.

4. 400 Watt luminaires shall be used wherever possible, to capitalize on the efficiency gained by the higher wattage. 250 Watt luminaires shall be utilized only where use of 400 Watt luminaires cannot meet the Authority's design criteria.

5. Only 400 Watt IES Type IV luminaires shall be permitted to be installed on Type MTLP 45 DOUBLE light standards.

6. All luminaires shall be installed with zero degrees tilt for roadways less than 100 feet in width. For roadways of greater width, tilt shall be allowed for IES Type IV luminaires only, up to 15 degrees maximum (with prior approval of the Authority.)

7. All luminaires shall be marked with a permanent identification, legible from the ground, that shows both the fixture wattage and IES Type. Examples: "40-4" indicates a 400 Watt, Type IV luminaire, "25-3" indicates a 250 Watt, Type III luminaire.

Standard Foundations

Materials and Construction Methods

Standard Foundation materials and installation shall be as per *2006 NCDOT Standard Roadway Drawings*. Types to be used on all projects are as follows:

1. Ground-Mounted NCDOT Standard Foundations

    a. Type R1
    b. Type R2

2. Median Barrier-Mounted NCDOT Standard Foundations

    a. Type M1
    b. Type M2

Design Requirements

The Design-Build Team shall design and install Standard Foundations to mount the Pole-Top Light Standards as required to satisfy the lighting design. The following Authority-specific requirements shall also apply:

1. Selection of Standard Foundations shall be based on the direction given in the NCDOT Roadway Standard Drawings.

2. Where light standards are proposed to be mounted in locations where the Type R1, R2, M1, or M2 foundations cannot be accommodated, such as on structures or where undersurface elements prevent installation, the Design-Build Team shall provide a special foundation design. All special foundation designs shall be signed and sealed by a Professional Engineer registered in the state of North Carolina as compliant with all applicable design codes and in accord with applicable procedures used by the NCDOT Geotechnical Department and NCDOT Structural Design Department.

Electrical Junction Boxes

Materials and Construction Methods

Electrical Junction Box materials and installation shall be as per *2006 NCDOT Standard Specifications for Roads and Structures*. Types and sizes to be used on all projects are as follows:

1. Type PC polymer concrete in-ground junction box
    a. Type PC18: 18” long x 12” wide x 18” deep
    b. Type PC24: 18” long x 24” wide x 18” deep
2. Type BR barrier-mounted junction box
    a. Type BR18: 18” long x 18” wide x 8” deep

Design Requirements

The Design-Build Team shall coordinate locations of Electrical Junction Boxes with site conditions, feeder circuits, and location of luminaires, and shall create a design in accordance with standard industry practice and the following Authority-specific requirements:

1. In order to facilitate cable pulling and splicing, an Electrical Junction Box shall be

installed adjacent to each light standard, High Mount Standard, illuminated sign structure pedestal, bridge-mounted sign, underpass lighting system, and at each end of conduit crossings under roadways. The location of conduit crossings shall be so arranged that the junction boxes or manholes at such crossings can also be used as service points to the above-noted facilities.

2. The junction box may be omitted at a light standard located at the end of a circuit where no future expansion is anticipated.

3. Junction boxes shall be installed at the end of spare conduit runs in barriers, walls, and structures, at the point nearest the wingwall, for future continuation of the conduit.

4. Junction boxes and Junction Box Foundations shall be installed within a maximum pulling distance of 250 feet.

5. Box sizes shall be selected to meet the requirements of the NEC for angle and straight pulls, and to accommodate sufficient room for slack cables and splices.

6. Type BR Junction Boxes shall be used in all barriers and parapets. Alternate designs will not be accepted.

Electrical Duct

Materials and Construction Methods

Electrical Duct materials and installation shall be as per *2006 NCDOT Standard Roadway Drawings*. Types to be used on all projects are as follows:

1. Type JA – Jacked

    a. Electrical Duct, Type JA, Size 3”
    b. Electrical Duct, Type JA, Size 4”

2. Type BD – Direct-Buried

    a. Electrical Duct, Type BD, Size 3”
    b. Electrical Duct, Type BD, Size 4”

Design Requirements

The Design-Build Team shall design Electrical Duct in accordance with standard industry practice and the following Authority-specific requirements:

1. Electrical Duct shall be provided under all roadway crossings and under/through all structures where required to maintain or install lighting feeder circuits without

disruption to traffic, roadways, or structures. Electrical duct shall be utilized as a sleeve for the installation of Feeder Circuits. Feeder Circuits in smaller conduits shall be installed through the Electrical Duct to allow for future maintenance.

2. At all locations where conduits pass under an active roadway, driveway, or parking area, a spare Electrical Duct shall be provided.

3. Electrical Duct shall be extended past the limits of future roadway widening and located such that future cable may be installed at a later date without hindrances such as pavement, guardrail, utilities, landscaping, drainage structures, signage, lighting, and others.

4. Sizes installed shall be as follows:

Where Feeder Circuit Conduit Size is:	Provide Electrical Duct Size:
1.5” – Single Feeder Circuit	3”
2” – Multiple Feeder Circuits	4”

Feeder Circuits

Materials and Construction Methods

Feeder Circuit materials and installation shall be as per *2006 NCDOT Standard Specifications for Roads and Structures*.

Design Requirements

The Design-Build Team shall design Feeder Circuits in accordance with standard industry practice and the following Authority-specific requirements:

1. Minimum size of cable for feeder circuits shall be #6 AWG, and maximum shall be #1/0 AWG. Other standard sizes, such as #4 AWG and #2 AWG shall be used as required, but variations in cable sizes shall be kept to a minimum in each project. Parallel feeders shall not be installed for lighting systems.

2. #8 or #10 AWG wire between feeders and individual fixtures or equipment shall be permitted to be installed up to a length of fifty (50) feet. Conductor size shall be dictated by Voltage Drop Calculations.

3. All lighting distribution systems shall be 480 volt 2-wire phase-to-phase without neutral and shall be provided with separate ground wire. The control circuits typically require 240 VAC phase to neutral, so a neutral wire will be necessary (only at the control panel.)

4. Lighting feeders shall be designed for a maximum current of 40 Amps, and shall

be provided with a circuit breaker with maximum 60 Amp trip capacity at the Light Control System. Breaker trip currents shall be selected to be at least 140% of continuous circuit current, to allow operation of the lighting loads and prevent nuisance tripping. Lower circuit breaker sizes shall be allowed, and are preferred in smaller installations to reduce wire size. The Authority maintains no set limit of the number of luminaires that may be connected to a given circuit, as long as each circuit meets the other requirements of this Section.

5. Circuits shall be designed so as not to exceed 80% of the total capacity of a Light Control System. Provide a Load Schedule on the plan sheet that will include the lighting control system. The schedule should list the light standards by quantity, and indicate type of luminaires by columns, with calculated current for each circuit and total Amperes.

6. Spare conductors shall be installed if future roadway devices or lighting is anticipated. All feeder phase conductors shall be continued to the last device on each circuit, and unused conductors shall be shown as capped in the junction box or manhole. This procedure ensures that future continuation of circuits is possible.

7. Where multiple circuit feeders are installed in one conduit, the conductor Ampacities shall be derated in accordance with the NEC.

8. Ground wire to be used in conjunction with roadway electrical and associated circuits shall be bare, stranded and tinned/coated copper, as specified in the Standard Specifications and/or Standard Drawings. Ground wire to be used in circuits within building and between panels shall be insulated and continuously colored green.

9. All Feeder Circuit cables shall be provided with slack at each junction box and standard foundation. A minimum of 6’ slack in each cable of each circuit shall be provided, including all ground wires.

10. All splices, including in-line connections, for roadway lighting cables shall be made by means of fused or non-fused cable connector kits.

11. Cables to be installed in confined spaces or roadway tunnels shall be low-smoke zero-halogen type.

12. SOW or SOOW type multi-conductor cable shall be installed for all navigation lighting installed on piers in lieu of a fixed conduit system. Type SO multi-conductor cable is also required inside lighting standards for single and twin luminaires.

13. Installations requiring high degree of cable flexibility, including cables that are required to move for equipment operation, shall utilize cables specifically

designed for that purpose.

14. A complete specification for all non-standard cables, including relevant industry testing standards and material certifications, shall be clearly indicated on the plans for ease of future replacement.

15. All light standards shall be numbered. The numbering shall start at Number 1 for each control system. The light standard numbers shall be clearly shown on any construction plans, to allow for proper Standard Identification Tags to be fabricated and installed. (See Detail "I" on Design Requirements Drawing L-5)

16. Each feeder circuit shall be installed in a separate 1.5" conduit. Where multiple circuits cross a roadway, they shall be run in one 2" conduit, installed within a 4" Electrical Duct. Only one ground wire shall be required when multiple circuits are installed in one conduit. Larger sizes shall be used only where required by the NEC to meet adequate conduit fill requirements.

17. For all lighting conduit that must pass through walls, bridge parapets, or other such concrete members, the Design-Build Team shall install enough conduit to provide for the lighting with this project as well as one additional spare 2" conduit. Circuits that enter and extend to the next median mounted light standard require a conduit sized 1½" to be used for this purpose, in order to provide adequate concrete coverage for the anchor bolts. Where a formed pull-box can be cast into the median, there is no need to have two conduits enter the base of each median mounted light standard.

18. Unless installed in an environmentally controlled space with no likelihood of water entering the conduit system, conduits shall enter all exposed cabinets from the bottom, or on the sides within 2" of the bottom of the cabinet. Under no circumstances shall conduits be allowed to enter the tops of any exterior cabinets containing electrical equipment.

19. The entire raceway system shall be grounded and bonded in accordance with the NEC. A separate ground wire shall be installed in all raceways such that the resistance to ground, and therefore the fault current path, is not dependent on such mechanical connections as couplings and fittings.

20. The Design-Build Team shall perform conduit fill calculations for each raceway, ensuring that no conduits are overfilled as per the requirements of the NEC. Actual cable diameters shall be used in these calculations. Where there is a likelihood of future additional wiring to be installed in any conduit, spare capacity shall be maintained in the conduit.

21. Conduits shall be located a minimum of 6 feet from guard rail installations.

22. Conduits on concrete, steel, or other exterior structures, and in any environment

that is not environmentally controlled shall be galvanized rigid steel (RGC). All attachment hardware shall be stainless steel or cast malleable iron. In order to minimize corrosion where conduits transition from an underground distribution system to a structure that is exposed to the air, a short section of PVC-coated galvanized rigid steel conduit shall be installed from a location 3 feet above grade to at least 2 feet below grade. This PVC-coated RGC shall then be permitted to be coupled to a PVC conduit to continue its run to the nearest underground junction box or manhole. A continuous ground wire shall be provided in all metal conduits.

23. Conduits on aluminum structures shall be fabricated of aluminum, and shall be mounted using stainless steel hardware.

24. PVC-coated galvanized rigid steel conduit and hardware shall be used on all structures that are exposed to corrosive areas, especially on bridge structures over bodies of saltwater. PVC-coated conduit shall also be used in all damp locations, and where conduits are cast in concrete, for the portion of the conduit run that makes the transition from the concrete to the open air. A detail shall be provided for all such installations in the plans.

25. PVC conduit shall not be used in any exposed installation, and shall not be permitted to be exposed to sunlight.

26. Electrical metallic tubing (EMT) shall be used only in environmentally-controlled, finished portions of buildings. EMT shall not be installed in any areas that are damp or that may be exposed to water.

27. Flexible metallic conduit shall be installed in maximum six (6) foot lengths where required to make complex bends, or where required to allow for flexibility in movement. Expansion/compression fittings shall be used instead of flexible conduit wherever the degree of expansion is within the allowable tolerances of these fittings.

28. Flexible metallic conduit shall not be used where rigid metallic conduit can be installed.

29. Fittings used shall be of the same material as the conduit they are attached to.

30. Wireways and cabinets shall be constructed of stainless steel, and provided with a NEMA 3R rating. Details of mounting shall be included that show mounting without compromising the water-tightness of the wireway. Where it is likely that water could collect in the wireway or enclosure, a drain hole shall be provided in a location that will not allow water entry.

31. Compression fittings shall not be allowed, except in buildings for EMT installations, where permitted as described above.

32. Conduits shall be shown running either parallel or perpendicular to key structural elements, and shall be installed with at least 1" clear between the conduit and structure to allow for drainage and to prevent debris accumulation.

33. Conduits for underpass and other structure lighting systems shall be surface mounted unless shown otherwise in the Standard Details or Specifications.

Voltage Drop Calculations

1. Lighting circuits shall be designed for a maximum of 3% voltage drop at the terminal point of each circuit (including the future lighting extensions, where required). Calculations shall be submitted for review.

2. Final voltage drop calculations shall be based on actual current utilizing AC resistance for uncoated copper conductor as listed in NEC Chapter 9 (Table 9). To simplify calculations, up to fifty (50) feet of #10 / #12 AWG fixture wire between the feeder and luminaires shall be permitted to be omitted from the voltage drop calculations.

3. Voltage drop calculations shall take into account all existing equipment to remain in place for the final design. It shall not be sufficient to analyze to voltage drop for new equipment only, unless the entire circuit is new.

4. In all toll plazas or roadways where additional future widening is contemplated, the locations of underground conduits, junction boxes, and High Mount Standards should be beyond the limits of future widening, if possible. Pole-Top Light standards, however, should be installed along the present edge of the pavement.

5. Lamp ballast input wattages used for Voltage Drop Calculations shall be as shown on the manufacturer's catalog cut sheet for the fixture being used in the design.

Electric Service Pole and Lateral

Materials and Construction Methods

Electric Service Pole and Lateral materials and installation shall be as per *2006 NCDOT Standard Specifications for Roads and Structures*, and as required by the Utility Company.

Design Requirements

The Design-Build Team shall design the Electric Service Pole and Lateral in accordance with standard industry practice, utility company requirements, and the following Authority-specific requirements:

1. Design-Build Team shall design height and class of required service pole, if required for the design, according to the requirements of the local utility company and the *National Electric Safety Code*.

2. All services shall be 240/480 Volt Single Phase, 3-wire as shown in the NCDOT Roadway Standard Drawings.

3. Service size shall be 150 Amp.

4. Service for toll plaza power systems shall be as described in the Toll Facility Geometry Design Requirements. As described below, power for lighting at Toll Plazas shall be connected to the plaza power system downstream of the Toll Plaza generator, to ensure emergency backup for the lighting systems in these critical revenue-collection areas.

5. Service conductors from the pole to the Light Control System shall be #1/0 AWG as shown in the NCDOT Roadway Standard Drawings unless a larger wire size is required to alleviate voltage drop on long service runs.

6. Conduit size for the riser shall be coordinated with the utility company.

Light Control System

Materials and Construction Methods

Light Control System materials and installation shall be as per *2006 NCDOT Standard Specifications for Roads and Structures*.

Design Requirements

The Design-Build Team shall design and locate Light Control Systems in accordance with standard industry practice and the following Authority-specific requirements:

1. Each lighting system shall be fed from a single standalone Light Control System. Certain large interchanges may require multiple Light Control Systems to cover all areas of the interchange.

   The Design-Build Team shall prepare a cost-benefit analysis when proposing more than one standalone load center in a given project, to determine whether it is more cost-effective to run extra cables to a single Light Control System, or install a second Light Control System.

2. At Mainline Toll Plazas, all lighting shall be fed from a Light Control System that is connected to the building power system instead of a separate utility service. At these locations, the generator shall be sized to handle all roadway lighting loads

connected to the Light Control System.

3. At Ramp Toll Plazas, lighting shall be powered from the Interchange Light Control System. It shall be permissible, though not required, to feed the Interchange Light Control System from the building power system.

4. All lighting systems shall be group controlled by means of a photoelectric control as shown in the Contract Documents. The photocell shall be installed facing north where possible for optimal operation. The photocell shall be located such that it is not affected by light sources in the vicinity of the lighting control equipment, to ensure continuous reliable nighttime operation of the lighting system.

5. The Light Control System shall be located where it is easily maintained. To minimize length of feeder circuits, the Light Control System shall be installed in a location that is central to the lighting system being fed.

6. Each Light Control System shall have a different ID for ease of reference and maintenance. The Design-Build Team shall submit the number and locations of Light Control Systems required for the project for the Authority's determination of the IDs to be used in the design.

7. The sizing and materials of all wires, components, and cabinets shall be verified by the Design-Build Team, and modified to meet all applicable requirements if necessary.

Underpass Lighting

Materials and Construction Methods

Underpass Lighting materials and installation shall be as per *NCDOT Standard Drawings and Specifications for Roads and Structures*. Types to be used on all projects are as follows:

1. Type WM – Wall-Mounted Underpass Luminaires
2. Type PM – Pendant-Mounted Underpass Luminaires

Design Requirements

The Design-Build Team shall design Underpass Lighting Systems in accordance with standard industry practice and the following Authority-specific requirements:

1. The intention of Underpass Lighting is not to accent the roadways beneath structures, but rather to provide adequate illumination and to achieve continuity of lighting throughout the roadway. Therefore, Underpass Lighting shall only be required where, due to structural limitations such as the width, skew and

minimum clearance, adequate illumination cannot be accomplished by means of ground-mounted light standards.

2. Underpass lighting luminaires shall be high pressure sodium type.

3. Where possible, Type WM installations shall be used for ease of maintenance and relamping. Type PM systems shall be used only where required to meet the Authority's Design Criteria and where luminaires are not located over active traffic lanes on Authority roadways. Given these requirements, the Design-Build Team shall design and install the most cost-effective installation.

4. Mounting height shall be as required for proper illumination of the roadway, and as follows:

    a. Type WM Luminaires – 15 ft. minimum
    b. Type PM Luminaires – Bottom of luminaire in line with bottom of adjacent stringer flange

5. Luminaire setback (light center to pavement edge distance) shall be as per the following minimum requirements:

    a. Type WM Luminaires – Face of pier or abutment to pavement edge
    b. Type PM Luminaires – 3 ft. beyond active lane.

6. Photometric requirements shall be as required by the *NCDOT Standard Specifications for Roads and Structures*.

7. For installations requiring Type PM luminaires, the Design-Build Team shall ensure that location of the luminaires, and the mounting detail does not block the light output to the roadway. Additional modeling may be required to determine this for installations between tightly spaced stringers.

8. The Design-Build Team shall provide specific installation details for all Underpass Lighting Systems, and shall model these details after the details shown on the *NCDOT Roadway Standard Drawings*.

GREENWAY SCOPE OF WORK (4-15-08)

The Design-Build Team shall incorporate grade-separated crossings of the Western Wake Freeway to ensure continuity of planned greenways across the facility in Apex and Cary.

For the purposes of this scope, greenways and multi-use paths shall be considered synonymous.

The Design-Build Team shall design greenways in accordance with the most current version of NCDOT's *Planning and Designing Local Pedestrian Facilities* and *North Carolina Bicycle Facilities Planning and Design Guidelines.*

In addition, the Design-Build Team shall design greenways within the jurisdiction of the Town of Cary in accordance with the following documents:

- Standard Specifications & Details, Town of Cary, August 23, 2007
- Parks, Recreation and Cultural Resources Facilities Master Plan, Town of Cary, December 11, 2003
- Parks, Recreation & Cultural Resources Greenway Construction Standards, Town of Cary

In addition, the Design-Build Team shall design greenways within the jurisdiction of the Town of Apex in accordance with the following documents:

- Standard Specifications & Construction Details, Town of Apex, November 20, 2007
- Design and Development Manual, Town of Apex, August 30, 2006 *(currently under revision)*

The Design-Build Team shall coordinate and obtain approvals of the design and construction of the greenways with the greenway owner and the NCTA. The Design-Build Team shall be responsible for all permits and fees (unless otherwise stated herein), and shall adhere to all environmental permit requirements.

The Design-Build Team shall submit two copies of each greenway design to the NCTA for review and acceptance. The Design-Build Team shall also provide the greenway owners the appropriate number of copies for their review and approval and allow a 20-day review time for the greenway owner.

Prior to initiating construction on each greenway, the Design-Build Team shall hold a coordination meeting with NCTA and the greenway owner. The Design-Build Team shall provide coordinately correct, electronic as-built drawing to the municipalities detailing the work included herein.

The Design-Build Team shall provide crossings for the following greenways:

Apex

Deleted Little Branch Pedestrian Culvert

Beaver Creek

The Beaver Creek Greenway is currently under construction. The Design-Build Team shall design the height and width of the proposed Western Wake Freeway structure over Beaver Creek to accommodate the greenway. Should the structure design interfere with the greenway alignment, the Design-Build Team shall be responsible for designing and relocating the limits of the greenway to satisfy design requirements. The Beaver Creek Greenway shall be closed to pedestrian traffic during the Beaver Creek structure construction.

Cary

White Oak Creek

The White Oak Creek Greenway is currently under construction. The Design-Build Team shall design the height and width of the proposed Western Wake Freeway structure over White Oak Creek to accommodate the greenway. The Town of Cary has constructed a temporary alignment through the Western Wake Freeway corridor. The Design-Build Team shall be responsible for designing and relocating the limits of the greenway to satisfy design requirements. The Design-Build Team shall be responsible for the removal of the temporary greenway and grading this area to an acceptable contour. The 14-foot wide greenway shall be constructed at an elevation at least 1 ft. above the 100 year floodplain elevation on the north side of White Oak Creek. A “bench in” option is provided below. The White Oak Creek Greenway shall be closed to pedestrian traffic during the White Oak Creek structure construction.

Bachelor Branch

A 12-foot by 12-foot greenway culvert shall be constructed on the south side of Bachelor Branch to accommodate the proposed Bachelor Branch Greenway. The greenway shall be constructed at an elevation at least 1 ft. above the 100 year floodplain. Electrical conduit shall be attached to the inside of this culvert to accommodate future lighting.

Panther Creek

The Design-Build Team shall design the height and width of the proposed Western Wake Freeway structure over Panther Creek to accommodate the greenway. The Design-Build Team shall design and construct a boardwalk across the corridor (right of way limit on east side to right of way limit on west side of project) to accommodate the proposed Panther Creek Greenway. The boardwalk shall be constructed on the north side of Panther Creek. The 14-foot wide greenway shall be constructed at an elevation at least 1 ft. above the 100 year floodplain elevation.

Morris Branch

The Design-Build Team shall design and construct a 10-foot multi-use path on the southern most side of the McCrimmon Parkway structure over Western Wake Freeway to accommodate the Morris Branch Greenway.

Nancy Branch

The Design-Build Team shall design the height and width of the proposed Western Wake Freeway structure over the East-West Collector to accommodate a future greenway that includes 15 foot berm for a 10 foot multi-use path on the south side and a 10 foot berm for sidewalk on the north side.

DETAIL SHOWING GREENWAY BENCHING

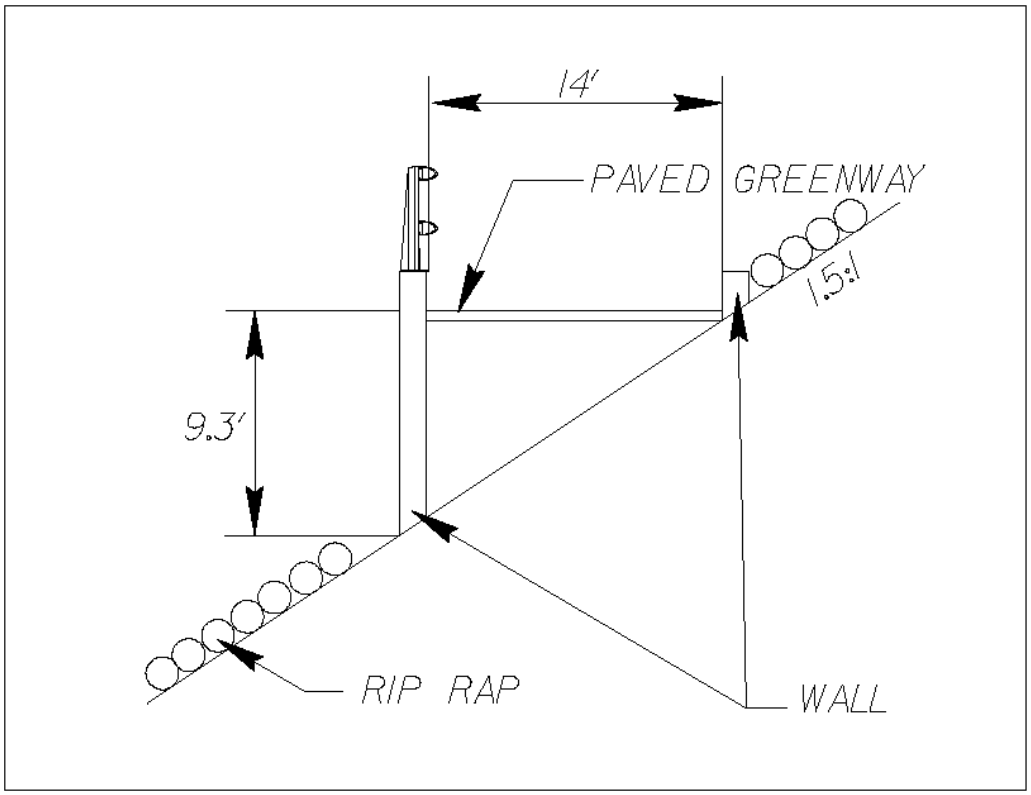

UTILITIES COORDINATION SCOPE OF WORK (3-14-08)

General

This scope of work only governs those utilities that are not specifically mentioned in the Utility Construction Scope of Work. Should any utilities not described in the Utility Construction Scope of Work be encountered during design or construction of this project, the Design-Build Team shall coordinate the relocation or adjustment of these utilities in accordance with this scope of work.

Overview

The Design-Build Team shall obtain the services of a Private Engineering Firm (PEF) knowledgeable in the NCDOT Utility Coordination Process, involved with utility relocation / installation and highway construction. The Design-Build Team shall be responsible for coordinating all utility relocations. Coordination shall include any necessary utility agreements when applicable. The NCTA will be responsible for non-betterment utility relocation cost when the utility company has prior rights of way / compensable interest. The utility company shall be responsible for the relocation costs if they can not furnish evidence of prior rights of way or a compensable interest in their facilities. The Design-Build Team shall be responsible for determining the cost responsibility for the utility relocations. The Design-Build Team shall be responsible for all costs associated with utility relocations due to haul roads and / or any other temporary conditions resulting from the Design-Build Team's methods of operation or sequence of work. NCTA will be the approving authority for all utility agreements and approval of plans.

The NCTA has initiated relocation efforts for the Progress Energy transmission line and relocation engineering work with all remaining utilities. The NCTA will provide the most current information to the Design-Build Team prior to the submission of the Technical and Price Proposals. The NCTA will continue this effort until Notice to Proceed, at which time the Design-Build Team shall assume responsibility for completing this coordination work, if necessary.

Preparation for relocating utilities within the existing or proposed highway Rights of Way

I. The Design-Build Team shall be required to use the guidelines as set forth in the following:

(A) NCDOT Utility Manual - Policies & Procedures for Accommodating Utilities on Highway Rights of Way

(B) Federal Aid Policy Guide- Subchapter G, Part 645, Subparts A & B

(C) Federal Highway Administration's Program Guide, Utility Adjustments & Accommodations on Federal Aid Highway Projects

(D) NCDOT Construction Manual Section 105-8

(E) NCDOT Right of Way Manual - Chapter 16 Utility Relocations

(F) NCDENR Public Water Supply - Rules governing public water supply

(G) NCDENR Division of Water Quality - Title 15A - Environment and Natural Resources

II. The Design-Build Team shall be responsible for confirming the utility locations, confirming the type of facilities, identifying the utility owners and determining the cost responsibilities in order to coordinate the relocation of any utilities in conflict with the project.

Arrangements for Protection or Adjustments to Existing Utilities

I. The Design-Build Team shall make the necessary arrangements with the utility owners for new installations required for the project, adjustments, relocations or removals where the Design-Build Team and utility company, with concurrence from the NCTA and/or NCDOT, determine that such work is essential for highway safety and performance of the required construction.

The Design-Build Team shall not commence work at points where the highway construction operations are adjacent to utility facilities, until making arrangements with the utility company to protect against damage that might result in expense, loss, disruption of service or other undue inconvenience to the public or utility owner. The Design-Build Team shall be responsible for damage to the existing or relocated utilities resulting from his operations. In the event of interruption of any utilities by the project construction, the Design-Build Team shall promptly notify the proper authority (Utility Company) and cooperate with the authority in the prompt restoration of service.

The Design-Build Team shall accommodate utility adjustments, reconstruction, new installation and routine maintenance work by others that may be underway or take place during the progress of the contract.

II. In the event of a utility conflict, the Design-Build Team shall request that the utility company submit relocation plans (Highway Construction Plans to be provided by the Design-Build Team to Utility Owners) that shows existing utilities and proposed utility relocations for approval by the NCTA and/or NCDOT.

The Design-Build Team shall be required to submit five (5) copies of the Utility Relocation Plans to the NCTA and NCDOT for review and approval prior to relocation work beginning. If the Design-Build Team determines the cost to be borne by NCTA, the Design-Build Team shall be required to submit five (5) copies of a detailed utility relocation estimate and copies of verification of compensable interest. The Design-Build Team shall also be responsible for submitting the appropriate agreements to be used with the relocation plans (See Agreements under line items V and VI). After the review process is complete, the NCTA will return one (1) copy of the Utility Relocation Plans, executed agreements and any necessary comments back to the Design-Build Team. The NCTA will also submit a copy of the approved Utility Relocation Plans to the NCDOT's State Utility Agent. If the Utility Relocation Plans are approved subject to changes, it shall be the Design-Build Team's responsibility to coordinate these changes with the appropriate utility company.

III. The cost for non-betterment utility relocation due to the highway construction will be the responsibility of NCTA when the utility company has prior rights of way / compensable interest. As stated in the overview, the Design-Build Team shall be responsible for determining cost responsibility / compensable interest. A compensable interest is identified as follows:

(A) Existing or prior easement rights within the limits of the project, either by recorded right of way or adverse possession (Utility occupying the same location for twenty (20) plus years outside the existing highway rights of way).

(B) Entities covered under *General Statute 136-27.1 and 136-27.2.* Statute requires the NCDOT to pay the non-betterment cost for certain water, sewer and gas relocations.

The cost in relocating CATV due to the highway construction shall be the responsibility of the CATV Company; however, under the following conditions the NCTA will bear the relocation expense:

(A) If the CATV Company can validate a recorded easement for facilities outside the maintained NCDOT rights of way.

(B) The adjustment is needed on existing utility poles to accommodate for a proposed NCDOT Traffic Management System Fiber Optic Communication Cable Project.

The NCTA and NCDOT shall not permit CATV to place poles within the highway rights of way but will allow down guys for their facilities within the highway rights of way. Under most circumstances, the CATV Company will continue a joint-use attachment with the local Power and Telephone Company. If the CATV proposed relocation places buried facilities within the highway rights of way then plans and encroachment agreements shall be required by the NCTA and/or NCDOT.

IV. If the Design-Build Team elects to make arrangements with a utility company to incorporate a new utility installation or relocation as part of the highway construction, the utility work done by the Design-Build Team and the associated costs for the work shall be negotiated and agreed upon between the Design-Build Team and the utility company.

If the Design-Build Team is requested, in writing, by an entity to relocate, upgrade or incorporate new water and sewer facilities as part of the highway construction, designs shall be coordinated with the Utility Owner, NCTA and/or NCDOT. The associated design and construction costs shall be negotiated and agreed upon between the Design-Build Team and the utility company. The Design-Build Team shall develop designs; prepare all plans for needed agreements and permits; submit permits directly to the agencies and obtain approval from the agencies. The Design-Build Team shall be responsible for all permit fees.

If the Design-Build Team elects to make arrangements with a Governmental Agency or any other utility owner for proposed utility construction, in which the Agency / Utility Owner shall be responsible for the costs of work to be performed by the Design-Build Team, the Design-Build Team shall be responsible for negotiating all costs associated with the proposed construction. Once the Design-Build Team and the Agency / Utility

Owner agree on a plan and a lump sum estimated cost for the utility construction, the Design-Build Team shall be responsible for submitting five (5) sets of 11 x 17 utility construction drawings to the NCTA and NCDOT for further handling. Each set shall include a title sheet, plan sheets, profiles and special provisions if available. Also, a letter from the Agency / Utility Owner agreeing to the plans and lump sum cost must accompany this package. The NCTA will reimburse the Design-Build Team the estimated lump sum cost under a Supplemental Agreement. The necessary Utility Agreement to the Agency / Utility Owner for reimbursement shall be a two party agreement between the NCTA and the Agency / Utility Owner; and will be developed and executed by the NCTA.

V. The Design-Build Team shall be required to utilize the NCTA Utility Encroachment Agreements as necessary in relocating utilities. The Encroachment Agreements shall be used under the following conditions:

(A) If a utility company is not occupying a valid right of way / compensable interest and the proposed relocation will place the relocated utilities within the existing or proposed highway rights of way.

(B) For **all** new utility installations within the existing or proposed highway rights of way. This includes all water, sewer and gas lines owned by entities covered under *General Statute 136-27.1 and 136-27.2.*

VI. The Utility Relocation Agreements and encroachment agreements are available from the NCTA. See Pages 59 and 60 of the *NCDOT Utility Manual on Policies & Procedures for Accommodating Utilities on Highway Rights of Way* for the different types of encroachment agreements available for use.

Preparation for Communication Cables / Electrical Services for Lighting, Toll Gantries, & ORT Facilities:

I. Prior to establishing the location for new meter poles, the Design-Build Team shall coordinate with the local Power Distribution Company concerning accessibility of E/C Service and safety in maintenance of the meter.

II. Prior to installation, the Design-Build Team shall provide plans for review and approval for all service taps that require a parallel installation within the C/A.

Parallel service installations within C/A shall be buried and located as close to the R/W line as practical. Only due to unusual circumstances will parallel aerial service installations within C/A be allowed. The Design-Build Team shall justify the allowance of parallel aerial service installation and obtain NCDOT approval prior to installation.

III. The Design-Build Team shall be responsible for all coordination activities required for the utility company to provide service taps. Prior to the Design-Build Team developing the associated designs and / or instructing the utility company to proceed with providing the service taps, the Design-Build Team shall obtain approval of the service tap locations from the NCTA. The NCTA will be responsible for construction costs associated with the utility company providing service taps.

Preparation for Adjusting Existing Utilities due to Proposed Traffic Management Systems Fiber Optic Communication Cables:

I. See Traffic Management and Signal Systems Scope of Work (if included in contract).

II. The Design-Build Team shall be responsible for the coordination activities required for the utility company to adjust or relocate existing facilities to accommodate the proposed ITS Communication Cable. The NCTA shall approve adjustments and relocations of existing facilities prior to the Design-Build Team developing the associated designs. The NCTA will be responsible for utility adjustment or relocation costs associated with the proposed ITS Communication Cable installation.

RIGHT-OF-WAY SCOPE OF WORK (4-15-08)

Mutual Right-of Way Agent

The NCTA has retained Carolina Land Acquisition, Inc. herein referred to as the "Agent," to perform all asbestos assessment and abatement, appraisals, appraisal reviews, negotiations, relocation services, Right of Way staking, and Right-of-Way monument placement required for completion of the project. A list of all parcels acquired prior to the submission of Proposals will be provided to all teams on the Reduced Candidates List.

Carolina Land Acquisition, Inc. will serve as the Right-of-Way Agent for both the NCTA prior to contract award and the Design-Build Team after contract award. After Notice to Proceed the Agent will report directly to the Design-Build Team and prioritize their work as directed by the Design-Build Team. The Agent's fees will be borne solely by the NCTA, regardless of the cause for additional Right-of-Way or easement. In the event the Design-Build Team deems the Agent non-responsive to the Design-Build Team's priorities, the Design-Build Team may recommend to the NCTA that payment be withheld from the Agent.

The Design-Build Team shall provide to the NCTA area data sheets based upon the accepted Right-of-Way Plans.

Each Design-Build Team will be afforded two confidential meetings with the Agent to convey the Team's priority parcels to be acquired. The Agent will provide the Team with a confidential estimate of (1) the anticipated schedule for acquiring, or otherwise gaining right-of-entry to, all parcels on the priority list supplied by the Design-Build Team, and (2) the anticipated non-binding cost of any additional Right-of-Way that the Team elects to pursue and for which cost the Design-Build Team will be held wholly responsible.

A list of parcels in order of acquisition priority shall be submitted directly to the NCTA Chief Engineer no later than the date specified in Section 1.G. of the ITP (Volume I). Within five business days of receipt of this list, the NCTA Chief Engineer will host a meeting between the NCTA, NCDOT State Alternative Engineer, the Agent, and the Design-Build Team. This meeting will serve to clarify the priorities for acquisition. Within five business days after this meeting, the NCTA will provide the Design-Build Team with the Agent's reasonable estimate for acquisition or right-of-entry for each of the parcels on the priority list. This estimate will be binding in regards to contract time, subject to the constraints of this scope of work, for the fifty (50) highest priority parcels. The estimate for all other parcels is non-binding. Furthermore, any estimate received outside of the process or timeframe established herein shall be non-binding. The Design-Build Team shall have no direct contact with the Agent in any manner except as identified herein.

Additional meetings will be afforded to each Design-Build Team following the Team's receipt of the written estimate. These meetings are to afford the Design-Build Team the opportunity to adjust their priority list, provide an opportunity to ask questions about the first written estimate, and receive a new written estimate within five business days of each meeting. The NCTA will not honor a request for any such meeting any later than two weeks prior to the deadline for the submission of Technical and Price Proposals.

The Design-Build Team shall submit, as part of their Technical Proposal, the priority list last conveyed to the Agent for which a written Agent response is provided.

The Design-Build Team is encouraged to verify and/or adjust the estimates provided by the Agent for the purpose of determining their own schedule.

Right-of-Way Costs Borne by Design-Build Team

The cost of the right-of way as shown on the Right-of-Way plans provided by NCTA for R-2635C and the Public Hearing Map for R-2635A and B will be borne by the NCTA. The cost of any additional Right-of-Way or easements, as required by the Design-Build Team's design or construction methods, beyond that shown on the Right-of-Way plans (R-2635C) and public hearing map (R-2635A & B) will be the responsibility of the Design-Build Team.

There are two exceptions to the above paragraph:

1) If the Design-Build Team demonstrates to the NCTA's satisfaction that the project cannot be constructed, or utilities relocated/constructed, within the right-of-way shown on the Right-of-Way plans provided by the NCTA, the NCTA will bear the cost for the portion of the additional Right-of-Way or easement that is satisfactorily demonstrated by the Design-Build Team as needed to construct the facility.

2) If the Design-Build Team implements design or construction changes that increase the right-of-way costs in one or more parcels but also reduce the right-of-way costs for other parcel(s), then the Design-Build Team will only be responsible for the net change in the right-of-way cost attributable to the design or construction change.

Contract Time

In the event that a parcel is not obtained, or otherwise granted right-of-entry, within 20 calendar days of a binding estimate for that parcel's availability, the NCTA will entertain requests for additional contract time. If the Design-Build Team demonstrates to the satisfaction of the NCTA that the delay in parcel availability affects their controlling operation, the contract time will be extended one calendar day for each calendar day delay beyond the 20-day grace period noted above. In no case shall further contract time extension be granted due to further indirect delays (such as weather, seasonal construction limitations, or borrow availability) that may result from the delay in parcel availability.

Any change to the priority list provided in the Technical Proposal that accelerates the Design-Build Team's expectation for a parcel's availability will nullify this consideration for contract time extension for that parcel.

Incentive for Reduction in NCTA Right-of-Way Costs

The current estimate for the Right-of-Way/easement costs for R-2635 is $232,000,000. If the Design-Build Team incorporates satisfactory design or construction innovations to reduce the Right-of-Way/easement costs to the NCTA, an incentive will be paid to the Design-Build Team as outlined below.

The baseline cost for this incentive is $220,400,000 or as adjusted in accordance with below. If, after all parcels and easements are acquired, the total Right-of-Way cost to the NCTA is below the baseline cost, and the reduction in Right-of-Way/easement costs directly results from design or construction innovations employed by the Design-Build Team, an incentive will apply. This incentive will be equal to 40% of the difference between the baseline cost and the actual verified cost of the projects Right-of-Way/easements. This incentive payment will be paid with the final partial payment.

In the event that a parcel is condemned but not yet settled by the time of the final partial payment, a cost of 10% above the final offer made prior to condemnation will be used in the calculation of the incentive.

In the event that the reduced Right-of-Way/easement cost is only partially attributable to design or construction innovations employed by the Design-Build Team, the baseline cost will be adjusted downward for that portion of the cost savings not directly attributable to the Design-Build Team's design or construction innovations.

CONSTRUCTION ENGINEERING & INSPECTION SCOPE OF WORK (4-09-08)

This Scope of Work describes and defines requirements for the construction inspection, materials sampling and testing, and technician level contract administration required for construction of this project hereinafter referred to as "Construction Engineering & Inspection" (CEI). The Design-Build Team shall employ a private engineering firm to perform Construction Engineering & Inspection for all work required under this contract. This private engineering firm is to be a separate entity, unaffiliated with the Design-Build Team in any way. Private engineering firms must be prequalified under the NCDOT's CEI prequalification procedures prior to bid submission.

I. General

- The CEI firm shall be responsible for all construction inspection, field materials sampling and testing, and technician level contract administration for the construction of the project.

- The CEI firm shall be responsible for all technician level contract administrative functions as defined in this scope of work and Article 105-10 of the Standard Special Provision entitled "Division One", the latest *NCDOT Construction Manual* and any other referenced manuals and processes.

- The CEI firm shall utilize effective control procedures such that the construction of the project is performed in reasonably close conformity with the plans, specifications, and contract provisions.

- The CEI firm shall be responsible for providing qualified technical personnel in appropriate numbers at the proper times such that all contract administration responsibilities are effectively carried out. Qualified technicians shall have all certifications necessary to perform the work required under this contract. It is the CEI firm's responsibility to provide, at all times, an appropriate number of employees to perform this scope of work.

- Work shall be performed in accordance with the established NCDOT standard procedures and practices which NCTA has adopted in their entirety, unless otherwise stated herein. The CEI firm shall be familiar with NCDOT standard procedures and practices as set forth in the latest *NCDOT Construction Manual* and associated manuals and also with informal procedures and practices for construction contract administration used by NCDOT. The private engineering firm shall be familiar with and adhere to all safety policies and procedures established by NCTA's Triangle Expressway Project Management Plan and NCDOT. Failure on the part of the CEI firm to perform this scope of work as expected will result in suspension of all work on the project until adequate inspection processes are in place.

II. Work Standards

- It shall be the responsibility of the CEI firm to ensure that the project is constructed in reasonably close conformity with the plans, specifications, and contract provisions.

- The CEI firm shall document any observed omissions, substitutions, defects, and deficiencies noted in the work, advise NCTA accordingly, and then take corrective action necessary, including suspending the work if necessary. . The CEI Firm shall develop and submit to the NCTA a non-conformance report for any defects or deficiencies noted in the work. This report shall contain a detailed description, digital photos, original and subsequent testing, recommended corrective action, corrective work performed, follow-up testing to ensure compliance and acceptability, and daily diaries of events associated with the defect or discrepancy.

- The CEI firm shall**,** in a timely manner, make normal and routine project decisions consistent with NCTA and NCDOT policies and procedures with general guidance by NCTA's Chief Engineer.

- The CEI firm shall perform Quality Control (QC) sampling and testing, that may be used in the acceptance decision, at the frequencies described in the NCDOT Minimum Sampling Guide. Laboratory testing performed by the Design-Build Team shall be performed by a facility that is approved by the NCDOT and is an AASHTO Accredited facility that participates in the AASHTO Materials Reference Laboratory / Cement and Concrete Reference Laboratory (AMRL/CCRL) proficiency testing program for the tests being performed. Technicians performing sampling and testing shall be qualified in accordance with NCDOT training and certification requirements for the specific materials, in accordance with AMRL/CCRL accreditation requirements and any required training by the NCTA.

- The CEI firm shall make and record such measurements as are necessary to assure that minimum sampling and testing requirements are being met and to calculate and document quantities for payment as required. The CEI firm shall certify that the appropriate amount of sampling and testing has been performed for all work within any partial payment request.

- The CEI firm shall monitor on-site and off-site construction operations and inspect all materials entering into the work such that the quality of workmanship and materials shall ensure the project will be completed in reasonably close conformity with the plans, specifications, and other contract provisions. The CEI firm shall keep detailed, accurate daily records of construction operations and significant events that affect the work.

- The standard procedures and practices of NCDOT for inspection of construction projects are detailed in the latest *NCDOT Construction Manual*, which the NCTA has adopted in its entirety unless stated otherwise herein.

- To ensure that materials and workmanship incorporated into the project are in reasonably close conformity with the plans, specifications, and contract provisions, the CEI firm shall perform field sampling and testing of component materials as described in the NCDOT Minimum Sampling Guide. CEI firm personnel performing sampling and testing must have appropriate certifications for each test that is performed.

- The Design-Build Team CEI firm shall utilize a computer application which integrates coordinately correct electronic plans (three dimensional models optional) with physical GPS location, construction oversight processes, and asset inventory / quantity management. Such computer application shall be *Bentley OnSite - Electronic Field Book for Stakeout and Inspection* or an approved equal.

- The CEI firm shall maintain, on a daily basis, a complete and accurate record of all activities and events relating to the project and a record of all construction work completed, including quantities of materials used and work accomplished in conformity with NCTA and NCDOT's policies and procedures.

- The CEI firm shall prepare inspector's daily reports of the construction operations in accordance with the latest *NCDOT Construction Manual*. These shall be forwarded to NCTA's Chief Engineer on a daily basis.

- The CEI firm shall enter each work item and the estimated quantity as detailed in the Table of Quantities, in NCDOT's Highway Construction and Material Systems (HiCAMS) computer application. The work items and estimated quantities will be revised to reflect updates to the Table of Quantities.

- The CEI firm shall, at a minimum, prepare a monthly comprehensive tabulation of the quantity of each work item satisfactorily completed to date. Quantities shall be based on daily records or calculations. Calculations shall be retained. The tabulation of quantities will be certified for accuracy and submitted to NCTA's Chief Engineer. Within two weeks after the end of each month, the CEI firm shall record the work item quantities satisfactorily performed during the previous month in HiCAMS.

- The CEI firm shall maintain records of all sampling and testing accomplished and analyze such records required such that acceptability of materials and completed work items is determined. The CEI firm shall record sampling and testing data in NCDOT's HiCAMS computer application.

- The CEI firm shall maintain records in accordance with the procedures outlined in the latest *NCDOT Construction Manual* for "Weight Tickets As A Basis Of Payment" for price adjustments for asphalt binders for plant mix. The CEI firm shall summarize and submit these records monthly for review and approval by NCTA.

- The CEI firm shall provide timely interpretations of the plans, specifications, and contract provisions. The CEI firm shall consult with NCTA's Chief Engineer when

an interpretation involves complex issues or may have an impact on the cost or time to perform the work or is known to be an area of dispute with the Design-Build Team. The CEI firm shall stop the work when necessary to ensure contract compliance.

- The CEI firm shall monitor each construction operation to ensure that no construction activities violate the requirements of any permits. The CEI firm shall notify the Design-Build Team immediately of any violations or potential violations that require immediate resolution. Permit violations shall be immediately reported to NCTA's Chief Engineer.

- The CEI firm shall inspect all traffic control devices and other safety related items each working day to ensure that all measures are properly installed and maintained. Checks shall be made after significant storms and/or high winds. Traffic control shall match the released for construction plans, appropriate work and/or conditions at all times and shall be monitored and enforced by the CEI firm.

- The CEI firm shall perform an erosion control inspection on a routine frequency and after every significant rainfall event. The CEI firm shall inspect all erosion and sediment control measures at the end of each working day to ensure all measures have been properly installed or reinstalled if the measures were removed to perform the work. The list of deficiencies shall be provided to NCTA's Chief Engineer as well as the Design-Build Team's Project Manager. The CEI firm shall maintain an updated set of Erosion Control Plans in accordance with NCTA and NCDOT policy.

- The CEI firm shall have a dedicated erosion control Certified Supervisor as defined in the Project Special Provision for Erosion & Sediment Control/Stormwater Certification who is knowledgeable of current North Carolina Sediment and Erosion Control Laws and vegetation establishment and maintenance techniques.

III. Certifications:

- The CEI firm shall maintain all material certifications in accordance with Article 106-3 of the Standard Special Provision entitled "Division One". These records shall be provided to NCTA's Chief Engineer prior to the final payment on the project.

- The monthly tabulation certification associated with the Table of Quantities shall also certify that the material sampling and testing has been performed in accordance with the contract requirements.

- The Design-Build Team shall, upon completion of the project, certify that all material certifications were received and the materials used in the work were found in compliance with the specification requirements. Any exceptions to the plans and specifications shall be clearly noted and brought to the attention of the NCTA.

  This certifications shall be in the following format:

"This is to certify that the results of the tests on Acceptance and QC/QA samples indicate that the materials incorporated in the construction work and the construction operations controlled by sampling and testing, were in conformity with the approved plans and specifications. Such results compare favorably with the results of the independent assurance sampling and testing. Exceptions to the plans and specifications are noted below:"

IV. Data and Services to be Furnished

- Quality Assurance (QA), verification and Independent Assurance (IA) testing will be performed by either the NCTA or the NCDOT, unless noted otherwise herein. NCTA, NCDOT or FHWA reserves the right to inspect any and all processes and procedures at any time.

- QMS certification sampling and testing and QMS asphalt lab quality assurance sampling and testing necessary for this project will be performed by the NCTA.

IV. Miscellaneous Provisions

- The CEI firm shall prepare all documentation necessary for the NCTA to meet all certification requirements in the permits.

- The contract between the Design-Build Team and the private engineering firm performing the Construction Engineering and Inspection shall in no way preclude the private engineering firm from suspending work on the project if and when necessary.

- The control and supervision of all phases of the Scope of Work performed by the CEI firm shall be under the direction of a Professional Engineer. The CEI firm shall assign, at all times, a staff of competent, qualified technicians adequate in number and experience, to perform the described Scope of Work.

- The CEI firm shall maintain all books, documents, papers, accounting records, and other information pertaining to costs incurred on this project and make such materials available for inspection at its offices at all reasonable times during the contract period and for three years from the date of final payment by NCTA, by any authorized representative of NCTA, NCDOT, and the Federal Highway Administration. Copies thereof shall be furnished to NCTA, NCDOT, and Federal Highway Administration if requested.

- Employees of the CEI firm or employees of any subconsultant for the CEI firm to provide inspection services for this project shall comply with NCTA's and NCDOT's ethics policies. Failure to comply with the ethics policies will result in the employee's removal from the project and may result in the NCTA recommending to the NCDOT that this CEI firm be removed from the NCDOT's list of prequalified Engineering Firms for Construction Engineering and Inspection.

- NCTA shall have the right to approve or reject any personnel assigned to a project by the CEI firm.

V. Compensation

No direct compensation will be made for the work of "Construction Engineering and Inspection". Compensation is included in the lump sum price bid for the entire project. No separate payment will be made for vehicles, office space, inspection equipment, materials, training requirements, surveying equipment, or any other incidentals as may be necessary to accomplish this work. The Design-Build Team shall compensate the CEI firm for services provided by the CEI firm on a lump sum basis. Compensation shall not be made on any type of unit price basis. The CEI firm is not allowed to provide an hourly quote for services to the Design-Build Team. The CEI quote for services to the Design-Build Team must be in the form of a lump sum quote.

VI. Other

- Quality Management System (QMS) for Asphalt Pavements: The Design-Build Team or Asphalt Producer shall perform all quality control sampling and testing for the asphalt mixtures and asphalt pavement density in accordance with Section 609 of the *2006 NCDOT Standard Specifications for Roads and Structures*. The NCTA or NCDOT will perform all quality assurance, verification and independent assurance sampling and testing for the asphalt mixtures and asphalt pavement density necessary for this project in accordance with NCDOT specifications, policies and procedures. NCTA reserves the right to inspect any and all sampling and testing processes and procedures at any time.

- Materials sampling, testing, or approval required for in state or out of state precast concrete, steel manufacturing, high mast light poles, overhead sign assemblies, toll gantries and other fabricating facilities where the NCDOT's Materials and Tests Unit routinely performs these functions will continue to be performed by NCDOT.

- All Materials for Work Items listed in the Table of Quantities shall be sampled and tested at the frequency defined for the corresponding Material Type as defined in the NCDOT Minimum Sampling Guide (MSG). The MSG is available from the NCDOT Materials and Tests Unit web site.

- The CEI firm is responsible for maintaining coordinately correct as-built plans during the construction and delivering a final set of coordinately correct as-built plans to NCTA's Chief Engineer upon completion of the project. The CEI firm shall also prepare the final estimate in accordance with NCTA and NCDOT policy for submittal to NCTA's Chief Engineer at the conclusion of the project.

VII. Verification of Partial Payments

- The CEI Firm shall complete a payment certification for each partial payment request submission to the NCTA's Project Manager. As a component of this payment certification, the CEI firm will certify that all the materials incorporated into the project and proposed for payment, for the payment period, have been tested in accordance with all contract requirements and have met the respective contract requirements. Any materials and/or products not meeting the requirements of the contract will be noted in the payment request and price adjustments will be proposed by the CEI firm in accordance with the contract. The CEI firm shall also reference the cost loaded CPM to certify that the partial payment amount requested (invoice) is consistent with the work performed for the period covered by the partial payment request.

UTILITY CONSTRUCTION SCOPE OF WORK (04-09-08)

GENERAL

The design and construction of any utilities not specifically mentioned in this Scope of Work shall be handled and paid for in accordance with the Utilities Coordination Scope of Work.

The NCTA is entering into agreements with the utility owners described below and the preparation of these agreements is not the responsibility of the Design-Build Team. Upon final design approval, the Design-Build Team shall provide five sets of ½-size plans for each of the utility owner's facilities to the NCTA for addendum to the NCTA / Utility Owner agreement. Concurrently with this submittal, the Design-Build Team shall submit one set of ½-size plans for each of the utility owner's facilities to the Alternative Delivery Unit, and one set of ½ -size plans to the NCDOT State Utility Agent.

The Design-Build Team shall design, furnish, install, inspect and coordinate the certification of the following utility facilities in accordance with the *Utility Construction Criteria* dated January 30, 2008, the Utility Construction Preliminary Routing Plans dated October 3, 2007, and Division 15 of the 2006 NCDOT Standard Specifications for Roads and Structures.

Town of Apex - Water Line, Sanitary Sewer Force Main, and Sanitary Sewer
Town of Cary - Water Line, Sanitary Sewer Force Main, and Sanitary Sewer

Community of Feltonsville - Water Line

The Design-Build Team shall develop and provide As-Built Drawings in accordance with the CADD guidelines, which are coordinately correct, horizontal and vertical, and tied to the state coordinate system. As-Built Drawings shall be provided for all utility facilities designed and constructed as part of this Scope of Work. In addition, the following As-Built information shall be provided to the NCTA and the municipalities:

Town of Apex and Feltonsville - Three hard copies on 24"x36" mylar or vellum and one electronic copy - AutoCad 2005 version or greater in .dwg drawing format.

Town of Cary - One hard copy on 24"x36" mylar or vellum and one electronic AutoCAD version on CD with TIFF images of the utility construction on each sheet.

The Utility Construction Preliminary Routing Plans dated October 3, 2007, are provided for general information only. These plans are considered preliminary routing plans that were based on preliminary plans, cross sections and profiles and should not be construed as final engineered design plans or as representing all possible conflicts. It shall be the responsibility of the Design-Build Team to identify all conflicts, obtain all municipality and environmental agency approval, and develop final construction documents accordingly.

Relocation and construction of all water and sewer, including but not limited to valves, fire hydrants, meters, that are impacted by the Design-Build Team's design and construction shall be the responsibility of the Design-Build Team, regardless of whether or not the conflict is

specifically mentioned in this Scope of Work. All costs for design, materials, permits and fees, installation, testing and relocation shall be the responsibility of the Design-Build Team and shall be included in their lump sum bid for the project.

Coordinate all installations, connections and interruption of service with the utility owner.

> The Design-Build Team shall coordinate and obtain approvals of the design and construction with the utility owner, the NCTA and the NCDOT, as appropriate. The Design-Build Team shall be responsible for all permits and fees (unless otherwise stated herein), shall adhere with DENR and MSD requirements, and shall be responsible for all DENR coordination and approvals associated with the facilities.
>
> The Design-Build Team shall be responsible for making application and permitting both water and sewer utilities with the utility owner, to include any application or permitting fees.
>
> The Design-Build Team shall submit two copies of the utility design to the NCDOT State Alternative Delivery Engineer for review and acceptance. The Design-Build Team shall provide the utility companies the appropriate number of copies for their review and approval.

The existing utility facilities are to remain in place and functioning until new or temporary facilities are certified and accepted as complete by the appropriate utility owner. There shall not be interruption of utility service, unless specifically stated for that conflict herein. Maintain service to all fire hydrants until relocated. Prior to placing any fire hydrant out of service, contact the appropriate municipality and fire department. Immediately repair and re-establish service line damage resulting from construction activities.

Existing facilities to be placed out of service shall be removed or grouted in accordance with Article 1000-7 of the 2006 *NCDOT Standard Specifications for Roadways and Structures*. The Design-Build Team shall properly removal and disposal of any matter within the utility, in accordance with local, State and Federal requirements.

Adhere to all NCDOT policies and procedures for accommodating utilities on highways rights of way.

Locate and verify the exact location, material, size, and condition of all water and sewer facilities.

> Unless noted otherwise, the Design-Build Team shall locate the new utility facilities as far from the roadway as possible while remaining within the NCTA or NCDOT right of way. Except for crossings and transitions from existing lines and tie-ins to bridge attachments, utility lines shall be beyond a 1V: 1H distance and a minimum of five feet from edge of pavement.

Maintain adequate separation between storm sewers, sanitary sewers and potable water mains per utility owner standards.

All materials shall be new. Water mains shall be NSF approved.

PVC pipe shall be a minimum DR18.

All steel casings up to 30-inch shall be a minimum 3/8 inch wall thickness; 30-inch to 42-inch shall be minimum ½ inch wall thickness; and 48-inch to 60-inch shall be a minimum 5/8 inch wall thickness. All casings shall be sealed on each end. Casings shall be located such that the utility owner may install the future utility main at a later date, which may be prior to project completion, by means of open cut without hindrances such as pavement, guardrail, utilities, landscaping, drainage structures, signage, lighting, and others.

All pipe joints that require constraint per the Utility Construction Criteria dated January 30, 2008, or the *2006 NCDOT Standard Specifications*, shall be mechanically restrained.

COMPENSATION

All costs for the design and construction of the proposed facilities described herein shall be included in the lump sum price bid for the project. No additional payments shall be made either by the NCTA or the utility owners for the utility design or construction work outlined in this Scope of Work.

All references to Method of Measurement, Basis of Payment or any other statement regarding direct payment for utility design and / or construction shall be disregarded.

UTILITY OWNER: Feltonsville Community Organization

CONTACT: Mr. Floyd Crump (919) 612-9037

WATER MAINS

<u>Description of Facilities</u>

R-2635A

Conflict #4 (Refer to the utility construction preliminary routing plans R-2635A, Sheet 4). The Organization has an existing 4 inch PVC water main along the west side of Old NC 55 -EY1-.

The Design-Build Team shall confirm that this is water main is not impacted.

Conflict #8 (Refer to the utility construction preliminary routing plans R-2635A, Sheets 16 and 17). The Organization has an existing water main along the north edge of Old Smithfield Road -Y5- from approximate Stations 19+50 to 32+60. The existing water main is constructed

of 3 inch and 2 inch PVC pipe and is neither of sufficient strength nor depth to remain under pavement. There are approximately 15 meters along this water main that will need to be reconnected. There is a 2 inch PVC water main tying into this water main at Forest Alley.

The Design-Build Team shall replace the existing main with a new 3 inch and 2 inch water main along Old Smithfield Road in a location that does not conflict with drainage or other utilities.

Standards

The Town of Apex Standards shall apply unless otherwise noted.

UTILITY OWNER: Town of Apex

CONTACT: Mr. Steve Miller, ORC (919) 362-8166

WATER MAINS

Description of existing facilities

R-2635A

Conflict #3. Refer to the utility construction preliminary routing plans R-2635A, Sheet 4.
The Town has an existing 16 inch ductile iron pipe water main along the east side of Old NC 55 -EY1-.

The Design-Build Team shall confirm that this is main is not impacted.

Conflict #7. Refer to the utility construction preliminary routing plans R-2635A, Sheets 14, 16, and 17.

The Town has an existing 8 inch ductile iron pipe water main along the north side of Old Smithfield Road -Y5- from approximate Stations 10+00 to 32+66 outside the back of ditch. There are approximately 5 hydrants and 2 meters along this water main.

R-2635B

Conflict #24. Refer to the utility construction preliminary routing plans R-2635B, Sheets 10, 32, and 33.

The Town has an existing 12 inch ductile iron pipe water main along the north side of Apex Barbecue Road -Y6- crossing the centerline -L- at approximate Station 248+54. There is approximately 1 hydrant along this water main.

The Design-Build Team shall design and construct a 12 inch ductile iron pipe water main as well as a 24 inch steel casing under the pavement of –L- along the new alignment of Apex

Barbecue Road in a location that will not conflict with drainage or other utilities. This water main may require a temporary water main because of the depth of cut, amount of right of way, and construction phasing in which case the Town will allow the use of PVC for temporary mains.

Conflict #26. Refer to the utility construction preliminary routing plans R-2635B, Sheets 15, 34, and 35.

The Town has an existing 12 inch ductile iron pipe water main along the south side of Olive Chapel Road -Y7- crossing the centerline -L- at approximate Station 302+60.

The Design-Build Team shall design and construct a 12 inch ductile iron pipe water main as well as a 24 inch steel casing under –L- along the new alignment of Olive Chapel Road in a location that does not conflict with drainage or other utilities. This water main may require a temporary water main because of the depth of cut, amount of right of way, and construction phasing in which case the Town will allow the use of PVC for temporary mains.

R-2635C

Conflict #29. Refer to the utility construction preliminary routing plans R-2635C, Sheet 6.

The Town has an existing 12 inch ductile iron pipe water main along the east side of Kelly -Y18- from approximate Stations 10+00 to 26+94. There are approximately 2 hydrants along this water main.

The Design-Build Team shall design and construct a 12 inch ductile iron pipe water main along the new alignment of Kelly Road in a location that does not conflict with drainage or other utilities. The new 12 inch water main must connect to the 12 inch water main conflict #31.

Conflict #30. Refer to the utility construction preliminary routing plans R-2635C, Sheet 6.

The Town has an existing 24 inch/30 inch ductile iron pipe water main along the east side of Kelly -Y18- from approximate Stations 10+00 to 44+00. There is approximately 1 hydrant along this water main.

The Design-Build Team shall design and construct a 30 inch ductile iron pipe water main along the new alignment of Kelly Road in a location that does not conflict with drainage or other utilities.

Conflict #31. Refer to the utility construction preliminary routing plans R-2635C, Sheets 6 and 30.

The Town has an existing 12 inch ductile iron pipe water main along the south side of US 64 -Y8- from approximate Stations 11+00 to 22+31. There are approximately 2 hydrants along this water main.

The Design-Build Team shall design and construct a 12 inch ductile iron pipe water main along the new alignment of Ramp Y-18-B in a location that will not conflict with drainage or other utilities. The new 12 inch water main must connect to the 12 inch water main conflict #29 and the 24 inch water main conflict #30.

Description of proposed facilities

R-2635A

Conflict #16. Refer to the utility construction preliminary routing plans R-2635B, Sheet 10.

The Town requests the installation of a 30 inch steel casing for a future 8 inch water main along the east side of Old Holly Springs Apex Road -EY3- crossing the centerline -L- at approximate Station 102+30.

The Design-Build Team shall design and construct a 30 inch steel casing. The casing shall be capped at both ends. The casing location must be such that the Town may install the future water main at a later date by means of open cut without hindrances such as pavement, guardrail, utilities, landscaping, drainage structures, signage, lighting, and others.

R-2635B

Conflict #20. Refer to the utility construction preliminary routing plans R-2635B, Sheets 7 and 28.

The Town requests the installation of 36 inch steel casing for a future 20 inch water main along the north/west side of Old US 1 -Y5- crossing the centerline -L- at approximate Station 196+30. The casing shall exist of 4 non-connecting segments each spanning underneath the fill/cut areas of Kelly Road -Y17-, intersection with both ramps -Y5RPA- -Y5LPA-, intersection with both ramps -Y5RPD- -Y5LPD and –L-.

The Design-Build Team shall design and construct a 36 inch steel casing. Each segment of the casing shall be capped at each end. The casing location must be such that the Town may install the future water main at a later date by means of open cut without hindrances such as pavement, guardrail, utilities, landscaping, drainage structures, signage, lighting, and others.

R-2635C

Conflict #41. Refer to the utility construction preliminary routing plans R-2635C, Sheet 11.

The Town requests the installation of a 24 inch steel casing for a future 8 inch water main along the south side of Roberts Road -Y13- crossing the centerline -L- at approximate Station 418+64.

The Design-Build Team shall design and construct a 24 inch steel casing. The casing shall be capped at both ends. The casing shall span –L-.

UTILITY OWNER: Town of Apex

CONTACT: Mr. Steve Miller, ORC (919) 362-8166

SANITARY SEWER

FORCE MAINS

Description of Existing Facilities

R-2635A

Conflict #2. Refer to the utility construction preliminary routing plans R-2635A, Sheet 4.

The Town has an existing 8 inch ductile iron pipe sanitary sewer force main along the east side of Old NC 55 -EY1-.

The Design-Build Team shall confirm that this is main is not impacted.

Conflict #5. Refer to the utility construction preliminary routing plans R-2635A, Sheet 4.

The Town has an existing 6 inch ductile iron pipe sanitary sewer force main along the east side of Old NC 55 -EY1-.

The Design-Build Team shall confirm that this is main is not impacted.

Conflict #6. Refer to the utility construction preliminary routing plans R-2635A, Sheet 4.

The Town has an existing 6 inch ductile iron pipe sanitary sewer force main along the west side of Old NC 55 -EY1-.

The Design-Build Team shall confirm that this is main is not impacted.

Conflict #9. Refer to the utility construction preliminary routing plans R-2635A, Sheets 14, 16, and 17.

The Town has an existing 8 inch ductile iron pipe sanitary sewer force main along the south side of Old Smithfield Road -Y5- from approximate Stations 10+00 to 32+66 outside the back of ditch.

R-2635B

Conflict #22. Refer to the utility construction preliminary routing plans R-2635B, Sheets 10, 32 and 33.

The Town has an existing 18 inch ductile iron pipe sanitary sewer force main along the south side of Apex Barbecue Road -Y6- crossing the centerline -L- at approximate Station 248+07.

The Design-Build Team shall design and construct an 18 inch ductile iron pipe sanitary sewer force main along the new alignment of Apex Barbecue Road in a location that does not conflict with drainage or other utilities. The new 18 inch sanitary sewer force main shall require a 30 inch steel casing spanning –L-.

Description of Proposed Facilities

R-2635C

Conflict #33. Refer to the utility construction preliminary routing plans R-2635C, Sheets 7 and 32.

The Town has an existing 8 inch ductile iron pipe sanitary sewer force main along the south side of Green Level Church Road -Y9- crossing the centerline -L- at approximate station 362+13.

The Design-Build Team shall replace the 8 inch ductile iron pipe sanitary sewer force main along Green Level Church Road in a location that does not conflict with drainage or other utilities. The new 8 inch sanitary sewer force main shall require an 18 inch steel casing spanning –L-.

UTILITY OWNER: Town of Apex

CONTACT: Mr. Steve Miller, ORC (919) 362-8166

GRAVITY SEWERS

Description of Existing Facilities

R-2635A

Conflict #1. Refer to the utility construction preliminary routing plans R-2635A, Sheet 4.

The Town has an existing 8 inch PVC sanitary sewer gravity main to the east of Old NC 55 -EY1-.

The Design-Build Team shall confirm that this is main is not impacted.

Conflict #6A. Refer to the utility construction preliminary routing plans R-2635A, Sheet 16.

The Town has an existing 8 inch PVC sanitary sewer gravity main along the north side of Old Smithfield Road -Y5- from approximate Stations 18+85 to 23+95 outside the back of ditch.

Conflict #6B. Refer to the utility construction preliminary routing plans R-2635A, Sheet 16.

The Town has an existing 8 inch PVC sanitary sewer force main along the north side of Old Smithfield Road -Y5- from approximate Stations 25+92 to 27+36 outside the back of ditch.

Conflict #6C. Refer to the utility construction preliminary routing plans R-2635A, Sheet 17.

The Town has an existing 8 inch PVC sanitary sewer force main along the north side of Old Smithfield Road -Y5- from approximate Stations 29+70 to 30+85 outside the back of ditch.

Conflict #9. Refer to the utility construction preliminary routing plans R-2635A, Sheet 5.

The Town has an existing 8 inch ductile iron pipe sanitary sewer gravity main flowing east to west crossing NC 55 Bypass -EY2- at approximate Station 22+31.

The Design-Build Team shall verify that this is main is not impacted.

Conflict #10. Refer to the utility construction preliminary routing plans R-2635A, Sheet 5.

The Town has an existing 8 inch PVC sanitary sewer gravity main flowing north to south crossing the centerline -L- at approximate Station 45+22.

The Design-Build Team shall design and construct an 8 inch ductile iron pipe sanitary sewer gravity main along the west side of NC 55 Bypass in a location that does not conflict with drainage or other utilities. The new 8 inch sanitary sewer gravity main must connect to the existing 8 inch sanitary sewer gravity main at the south end.

R-2635B

Conflict #25. Refer to the utility construction preliminary routing plans R-2635B, Sheet 13.

The Town has an existing 24 inch ductile iron pipe sanitary sewer gravity main flowing east to west along Beaver Creek crossing the centerline -L- at approximate Station 284+29.

The Design-Build Team shall verify that this is main is not impacted.

R-2635C

Conflict #32. Refer to the utility construction preliminary routing plans R-2635C, Sheet 31.

The Town has an existing 16 inch ductile iron pipe sanitary sewer gravity main flowing north to south crossing US 64 -Y8- at approximate Station 44+31.

The Design-Build Team shall verify that this is main is not impacted.

Description of Proposed Facilities

R-2635A

Conflict #13. Refer to the utility construction preliminary routing plans R-2635A, Sheet 6.

The Town requests the installation of a 24 inch steel casing for a future sanitary sewer gravity main crossing the centerline -L- at approximate Station 63+39.

The Design-Build Team shall design and construct a 24 inch steel casing.

Conflict #14. Refer to the utility construction preliminary routing plans R-2635A, Sheet 7.

The Town requests the installation of a 48 inch steel casing for a future 20 inch ductile iron pipe sanitary sewer gravity main along White Oak Creek crossing the centerline -L- at approximate Station 75+00.

The Design-Build Team shall design and construct a 48 inch steel casing.

Conflict #15. Refer to the utility construction preliminary routing plans R-2635A, Sheet 10.

The Town requests the installation of a 24 inch steel casing for a future sanitary sewer gravity main along Old Holly Springs Apex Road -EY3- crossing the centerline -L- at approximate Station 102+30.

The Design-Build Team shall design and construct a 24 inch steel casing.

Conflict #17. Refer to the utility construction preliminary routing plans R-2635A, Sheet 12.

The Town requests the installation of a 36 inch steel casing for a future 12 inch ductile iron pipe sanitary sewer gravity main crossing the centerline -L- at approximate Station 128+40.

The Design-Build Team shall design and construct a 36 inch steel casing.

R-2635B

Conflict #19. Refer to the utility construction preliminary routing plans R-2635B, Sheet 5.

The Town requests the installation of a 36 inch steel casing for a future 16 inch ductile iron pipe sanitary sewer gravity main crossing the centerline -L- at approximate Station 170+40.

The Design-Build Team shall design and construct a 36 inch steel casing.

Conflict #21. Refer to the utility construction preliminary routing plans R-2635B, Sheet 8.

The Town requests the installation of a 24 inch steel casing for a future 8 inch ductile iron pipe sanitary sewer gravity main crossing the centerline -L- at approximate Station 213+30.

The Design-Build Team shall design and construct a 24 inch steel casing.

R-2635C

Conflict #27. Refer to the utility construction preliminary routing plans R-2635C, Sheet 5.

The Town requests the installation of a 42 inch steel casing for a future 24 inch ductile iron pipe sanitary sewer gravity main crossing the centerline -L- at approximate Station 315+42.

The Design-Build Team shall design and construct a 42 inch steel casing.

Conflict #38. Refer to the utility construction preliminary routing plans R-2635C, Sheet 8.

The Town requests the installation of a 24 inch steel casing for future 8 inch ductile iron pipe sanitary sewer gravity main along Clark Branch crossing the centerline -L- at approximate Station 379+63.

The Design-Build Team shall design and construct a 24 inch steel casing.

Conflict #39. Refer to the utility construction preliminary routing plans R-2635C, Sheet 10.

The Town requests the installation of a 24 inch steel casing for future 8 inch ductile iron pipe sanitary sewer gravity main along Clark Branch crossing the centerline -L- at approximate Station 397+85.

The Design-Build Team shall design and construct a 24 inch steel casing.

Conflict #40. Refer to the utility construction preliminary routing plans R-2635C, Sheet 10.

The Town requests the installation of a 24 inch steel casing for a future 8 inch ductile iron pipe sanitary sewer gravity main crossing the centerline -L- at approximate Station 404+13.

The Design-Build Team shall design and construct a 24 inch steel casing.

Standards

Adhere to Town of Apex Standards unless otherwise noted.

Obtain and use elevations and inverts for all casings and gravity pipes from the OWNER.

UTILITY OWNER: Town of Cary

CONTACT: Mr. Robert Hirt (919) 481-5099

WATER MAINS

Description of existing facilities

R-2365C

Conflict #35. Refer to the utility construction preliminary routing plans R-2365C, Sheets 8, 33 and 34.

The Town has an existing 42 inch ductile iron pipe water main along the south side of Jenks Road -Y11- crossing the centerline -L- at approximate Station 368+88. This water main crosses to the north side of Jenks Road.

The Design-Build Team shall design and construct a 42 inch ductile iron pipe water main along the new alignment of Jenks Road in a location that does not conflict with drainage or other utilities.

Conflict #36. Refer to the utility construction preliminary routing plans R-2365C, Sheets 8, 33 and 34.

The Town has an existing 30 inch ductile iron pipe water main along the south side of Jenks Road -Y11- crossing the centerline -L- at approximate Station 369+24.

The Design-Build Team shall design and construct a 30 inch ductile iron pipe water main along the new alignment of Jenks Road in a location that does not conflict with drainage or other utilities.

Conflict #42. Refer to the utility construction preliminary routing plans R-2365C, Sheets 11, 35 and 36.

The Town has an existing 12 inch ductile iron pipe water main along the north side of Roberts Road -Y13- crossing the centerline -L- at approximate Station 418+37. This was installed with a tee and 2 valves on each side of the main lanes to facilitate tying in the relocated water main.

The Design-Build Team shall design and construct a 12 inch ductile iron pipe water main along the new alignment of Jenks Road in a location that does not conflict with drainage or other utilities. The new 12 inch water main should connect to the existing 12 inch gate valves at both ends.

Conflict #47. Refer to the utility construction preliminary routing plans R-2365C, Sheets 19 and 20.

The Town has an existing 16 inch ductile iron pipe water main along the south side of Green Hope School Road -Y15- crossing the centerline -L- at approximate Station 549+12. There is approximately 1 hydrant along this water main.

The Design-Build Team shall design and construct a 16 inch ductile iron pipe water main along the new alignment of Green Hope School Road in a location that does not conflict with drainage or other utilities.

Conflict #52. Refer to the utility construction preliminary routing plans R-2365C, Sheets 25 and 39.

The Town has an existing 16 inch ductile iron pipe water main along the north side of Carpenter Fire Station Road -Y16- crossing the centerline -L- at approximate Station 622+75. There are approximately 2 hydrants along this water main.

The Design-Build Team shall design and construct a 16 inch ductile iron pipe water main along the new alignment of Carpenter Fire Station Road in a location that does not conflict with drainage or other utilities.

Conflict #54. Refer to the utility construction preliminary routing plans R-2365C, Sheet 26.

The Town has an existing 12 inch ductile iron pipe water main along Morris Branch crossing the centerline -L- at approximate Station 637+06.

The Design-Build Team shall design and construct a 12 inch ductile iron pipe water main along the existing water main alignment in a location that does not conflict with drainage or other utilities. The new 12 inch water main will require a 24 inch steel casing that spans from the cut/fill area from west to east.

Description of proposed facilities

Conflict #44. Refer to the utility construction preliminary routing plans R-2365C, Sheets 15, 37, and 38.

The Town requests the installation of a 12 inch ductile iron pipe water main along the north side of Green Level West Road -Y14- crossing the centerline -L- at approximate Station 476+90.

The Design-Build Team shall design and construct a 12 inch ductile iron pipe water main along the new alignment of Green Level West Road in a location that does not conflict with drainage or other utilities. The new water main shall have gate valves at each end.

Conflict #48. Refer to the utility construction preliminary routing plans R-2365C, Sheet 21.

The Town requests the installation of a 16 inch ductile iron pipe water main along the north side of Morrisville Parkway -Y14- crossing the centerline -L- at approximate Station 572+82.

The Design-Build Team shall design and construct a 16 inch ductile iron pipe water main along the new alignment of Morrisville Parkway in a location that does not conflict with drainage or other utilities. The new water main shall have a valve at each end.

UTILITY OWNER: Town of Cary

CONTACT: Mr. Robert Hirt (919) 481-5099

SANITARY SEWERS

FORCE MAIN

Description of Existing Facilities

R-2635C

Conflict #46. The Town has an existing 4 inch ductile iron sanitary sewer force main along Bachelor Branch crossing the centerline -L- at approximate Station 517+24.

The Design-Build Team shall verify that this line was removed prior to roadway construction.

Conflict #51. Refer to the utility construction preliminary routing plans R-2635C, Sheets 25 and 39.

The Town has an existing 10 inch ductile iron pipe sanitary sewer force main along the south side of Carpenter Fire Station Road -Y16- crossing the centerline -L- at approximate Station 622+32.

The Design-Build Team shall design and construct a 10 inch ductile iron pipe sanitary sewer force main along the new alignment of Carpenter Fire Station Road in a location that does not conflict with drainage or other utilities.

Conflict #56. Refer to the utility construction preliminary routing plans R-2635C, Sheet 29

The Town has an existing 14 inch ductile iron pipe sanitary sewer force main along Alston Avenue crossing the centerline -L- at approximate Station 686+95.

The Design-Build Team shall design and construct a 14 inch ductile iron pipe sanitary sewer force main in a location that does not conflict with drainage or other utilities. The new 12 inch water main may require a 30 inch steel casing.

UTILITY OWNER: Town of Cary

CONTACT: Mr. Robert Hirt (919) 481-5099

GRAVITY SEWERS

Description of Existing Facilities

R-2635C

Conflict #43. Refer to the utility construction preliminary routing plans R-2635C, Sheet 14.

The Town has an existing 24 inch ductile iron pipe sanitary sewer gravity main flowing north to south along White Oak Creek crossing the centerline -L- at approximate Station 460+60.

The Design-Build Team shall verify that this is main is not impacted. Confirm pipe and casing thickness and compare to load from fill.

Conflict #45. Refer to the utility construction preliminary routing plans R-2635C, Sheet 17.

The Town has an existing 30 inch ductile iron pipe sanitary sewer gravity main flowing north to south along Bachelor Branch crossing the centerline -L- at approximate Station 517+24.

The Design-Build Team shall verify that this is main is not impacted. Confirm pipe and casing thickness and compare to load from fill.

Conflict #53. Refer to the utility construction preliminary routing plans R-2635C, Sheet 17.

The Town has an existing 18 inch ductile iron pipe sanitary sewer gravity main flowing north to south along Morris Branch crossing the centerline -L- at approximate Station 636+84.

The Design-Build Team shall verify that this is main is not impacted. Confirm pipe and casing thickness and compare to load from fill.

Conflict #55. Refer to the utility construction preliminary routing plans R-2635C, Sheet 17.

The Town has an existing 12 inch ductile iron pipe sanitary sewer gravity main flowing north to south along Nancy Branch crossing the centerline -L- at approximate Station 673+61.

The Design-Build Team shall verify that this is main is not impacted. Confirm pipe and casing thickness and compare to load from fill.

Description of Proposed Facilities

R-2635C

Conflict #49. Refer to the utility construction preliminary routing plans R-2635C, Sheet 23.

The Town requests the installation of a 36 inch steel casing containing a 12 inch ductile iron pipe sanitary sewer gravity main with a manhole at each end along Panther Creek Tributary crossing the centerline -L- at approximate Station 597+95.

The Design-Build Team shall design and construct a 12 inch ductile iron pipe sanitary gravity sewer with a 36 inch steel casing and one manhole at each end. The steel casing should extend from toe of slope to toe of slope. Manhole locations must be out side the right of way such that the Town may install the future sanitary sewer gravity main at a later date by means of open cut without hindrances such as pavement, guardrail, utilities, landscaping, drainage structures, signage, lighting, and others.

Conflict #50. . Refer to the utility construction preliminary routing plans R-2635C, Sheet 24.

The Town requests the installation of a 24 inch steel casing containing a 8 inch ductile iron pipe sanitary sewer gravity main with a manhole at each end along Panther Creek crossing the centerline -L- at approximate Station 610+90.

The Design-Build Team shall design and construct an 8 inch ductile iron pipe sanitary gravity sewer with a 24 inch steel casing and one manhole at each end. The steel casing should extend from toe of slope to toe of slope. Manhole locations must be out side the right of way such that the Town may install the future sanitary sewer gravity main at a later date by means of open cut without hindrances such as pavement, guardrail, utilities, landscaping, drainage structures, signage, lighting, and others

Standards

Adhere to Town of Cary Standards dated 9/8/2005 unless otherwise noted.

Submit a permit for all lines adjusted with the Town of Cary.

OWNER: EMC^2 Corporation

CONTACT: Mr. Mark Flanagan (919) 387-5359

SANITARY SEWER FORCE MAIN

Description of Existing Facilities

R-2635A

Conflict #11. Refer to the utility construction preliminary routing plans R-2635A, Sheets 4A and 5.

EMC has an existing 4 inch PVC sanitary sewer force main flowing north to south crossing ramp -Y2RPD- at approximate Station 22+80.

The Design-Build Team shall design and construct a 4 inch PVC sanitary sewer force main to the in a location that does not conflict with drainage or other utilities. The new 4 inch sanitary sewer force main must connect to the new western most manhole of the Town of Apex 8 inch sanitary sewer gravity main conflict #10.

Standards

Adhere to Town of Apex Standards unless otherwise noted.

AESTHETIC DESIGN SCOPE OF WORK (04-09-08)

General

The aesthetic design and construction of the project shall include aesthetic treatments to roadway, bridge and other elements in a cost and maintenance conscious manner.

The NCTA has developed Aesthetic Design Guidelines, dated September 28, 2007, which portray the general theme for the Triangle Expressway corridor, including both this project and the Triangle Parkway project (by others). The NCTA consulted an architectural review committee of community representatives to assure that the theme is appropriate for the context in which the Triangle Expressway will be located. The style and detailing of the aesthetic theme was inspired by historic North Carolina civic buildings, particularly the State Capitol Building in Raleigh and Tryon Palace, and the seventeenth-century North Carolina Colonial Governor's mansion. Details and materials from these buildings were adapted in a style that is compatible with the contemporary Research Triangle Park and rapidly growing communities of Cary, Apex, Holly Springs and Wake County.

The Design-Build Team shall utilize the NCTA Aesthetic Guidelines provided by NCTA to develop the designs, plans and details necessary for aesthetic treatments of the bridges, roadway, and other elements as outlined herein. The Aesthetic Guidelines are guidelines; however, they shall serve as the basis for retaining aesthetic treatment uniformity throughout the Triangle Expressway corridor. The Design-Build may adapt the aesthetic treatments, materials, or construction techniques while preserving the general theme portrayed in the Aesthetic Design Guidelines, dated September 28, 2007. The structural member dimensions included in the Aesthetic Design Guidelines have not been engineered and therefore may be modified to suit the design. Dimensions for details such as grooves and indentations may be modified slightly but not to an extent that lessens their visual effect on the travelling public. The Design-Build Team is encouraged to consider aspect ratios in the modification of any dimension shown in the Aesthetic Design Guidelines.

The Design-Build Team is cautioned that the Aesthetic Design Guidelines are not engineered drawings. It is the responsibility of the Design-Build Team to ensure that the aesthetic details incorporated into the plans meet the requirements of the Contract Documents.

The Design-Build Team shall coordinate with the Design-Build Team for the Triangle Parkway project to reconcile appropriate changes in the aesthetic designs and details to ensure that the proposed aesthetic treatments are visually similar and consistent throughout both projects of the corridor. The NCTA shall serve as the conduit for this coordination.

Consistency of the design motif throughout all of the tolling areas, bridge abutments and bents, sign structures and other roadway elements is essential to the success of the design.

The NCTA has targeted a delta cost of approximately two percent of the total construction cost for the Mandatory Aesthetic Treatments identified in this RFP. If the Design-Build Team foresees the Mandatory Aesthetic Treatments outlined below as exceeding this cost threshold,

the Design-Build Team is encouraged to communicate this concern to the NCTA prior to their submittal of the aesthetics details package (Reference Section 1.G. of the ITP (Volume I).

Submittal of Aesthetics Details Package (Pre-Bid)

The Design-Build Team shall submit a package (five copies) to the NCTA that conveys their approach to aesthetics and satisfies the requirements of Section 1.G. of the ITP (Volume I). The Design-Build Team is cautioned that the aesthetics details for at least all Mandatory Aesthetic Treatments identified herein must be pre-approved in writing by the NCTA within the timeline specified in the aforementioned section of the ITP or the Technical Proposal may be deemed non-responsive. The Design-Build Team must also include, at a minimum, the pre-approved aesthetics details package in the Technical Proposal.

The Design-Build Team shall also address the attributes of their approach to aesthetics in their Oral Presentation with the Technical Review Committee.

Preliminary Design

After contract award, the Design-Build Team shall clearly present, with appropriate visual aids, the design intent, their aesthetic theme, general plan, and preliminary details for each design element within the project. The NCTA will require 30 days to review these details to ensure that they are acceptable and complementary to those for the Triangle Parkway Project.

Final Design

The Design-Build Team shall include the accepted aesthetics details with the appropriate submittal of preliminary and final designs plans for each element (bridge, roadway, sign structure, gantry, etc.).

The Design-Build Team shall develop and submit for review any specifications, material requirements or construction processes needed to accomplish the aesthetic work along with the final design submittal for each element.

Mandatory Aesthetic Treatments

The Design-Build Team shall include the following aesthetic treatments, as a minimum, in their plans and their lump sum price bid for the entire project.

- Brick appearance using form liners and concrete stains on bridge abutments and side retaining walls with decorative pilasters, emblems, coping, and any necessary pedestrian safety railing.
- Bridge barrier rails with a traffic face on -Y- lines that satisfies the requirements of this RFP and the New Jersey traffic face on all bridges on the mainline. All bridge barrier rails shall have the outside face detail comparable to that shown in the Aesthetics Design Guidelines.
- Decorative interior bents and columns to match bridge abutment pilaster details

- Decorative column or column façade for toll gantries and overhead and pedestal sign structures
- Aesthetic treatment to gantry structural elements (Reference the Open Road Tolling (ORT) Infrastructure Scope of Work)
- Brick appearance using form liners and concrete stain on noise walls with decorative pilasters on the traffic side only. The noise wall at Olive Chapel Elementary School shall also have an aesthetic treatment on the back of the noise wall consistent with the school architectural elements.
- Noise walls shall be constructed with periodic horizontal offsets in lieu of in a straight line. Include access breaks for maintenance behind the walls.
- Unless otherwise noted herein, brick appearance using form liners and concrete stain on retaining walls with decorative pilasters and coping to match bridge abutment details for those retaining walls that can be seen by the travelling public
- Decorative screening at toll system utility buildings to visually shield the motorist from such buildings consistent with the noise wall aesthetics.
- Coloring of all elements as identified in the RFP, or as otherwise approved by the NCTA.
- Aesthetic treatments are not required for stream crossing structures and greenways, including the bridge over Nancy Branch and the Future East-West Collector.
- Aesthetics treatments will not be required for the Kelly Road bridge over US 64

Voluntary Aesthetic Treatments

The Design-Build Team may elect to include other Voluntary Aesthetic Treatments in their Technical Proposal and/or design, such as the following, that will increase the visual appearance of the toll facility.

- Brick façade (embedded brick, brick veneer, or full brick) on bridge abutments and side retaining walls
- Brick façade (embedded brick, brick veneer, or full brick) on noise walls
- Brick façade (embedded brick, brick veneer, or full brick) on retaining walls
- Ornamental lighting across bridges
- Battered Abutments
- Bridge abutment planters on traffic approach with pedestrian rail along the -Y- line edge of the planter
- Embossed Street Identification on Bridge Abutment
- Fascia concrete girders with as smooth a face as is practicable
- Identity logos on noise walls
- Other such features included in the Aesthetic Design Guidelines but not specifically mentioned as Mandatory Aesthetic Treatments
- Pedestrian fencing on Apex-Barbecue Rd., Olive-Chapel Rd., and McCrimmon Parkway bridges.

The incorporation of both Mandatory and Voluntary Aesthetic Treatments into the Technical Proposal will be evaluated in accordance with the Section 3.B.(vi) of the ITP (Volume I).

Materials, Construction, and Fabrication

The Design-Build Team shall demonstrate to the NCTA the long-term durability of any staining proposed and provide a minimum of three test panels, produced in different batches, to demonstrate the consistency of color and the facsimile to real brick.

Visible joints in the brick appearance or brick façade walls are of concern to the NCTA. The Design-Build Team shall demonstrate in their aesthetics details package, to the NCTA's satisfaction, how joints will be eliminated or otherwise masked from affecting the overall appearance and continuity of the wall.

Three test panels will be required for each type of colored concrete element on the project. At their own risk, the Design-Build Team may elect to use production elements as the test panels.

The slopes required by this RFP govern the slopes identified in the Aesthetic Design Guidelines.

Concrete girders are preferred. In the event that steel girders are used, the steel shall be AASHTO M270 Grade 50 and painted in accordance with Article 442-7 of the 2006 NCDOT Standard Specifications. The paint system shall be System 1. All steel girders on the project shall be painted the same color as that specified for the concrete girders in the Aesthetic Design Guidelines.

Precast members may be used for structural supports or to hide structural members. Hollow sections may be used if the Design-Build Team can demonstrate to the NCTA's satisfaction that adequate access for maintenance and inspection is also provided.

Pedestrian fence across highway bridges is not required on this project.

PUBLIC INFORMATION SCOPE OF WORK

The Design-Build Team will take the lead role on the Project and be responsible for the public information efforts through the NCTA's designee. The Design-Build Team's responsibilities will include:

- Organizing public meetings;
- Providing media announcements;
- Developing and producing informational print materials;
- Soliciting and administering media advertisements;
- Providing details surrounding the project impacts to the public;
- Providing advance notice to the NCTA and the NCDOT Division Engineer of upcoming project impacts;
- Attending and/or speaking at public meetings; and
- Hand delivery of informational materials.

The NCTA will be responsible for reviewing and approving all of the public information materials created by the Design-Build Team for distribution for this project. The NCTA will also be responsible for any postage necessary for mailings to the identified target audiences.

The Design-Build Team shall coordinate with the NCTA to promote public awareness for this project. Prior to beginning construction, the Design-Build Team shall develop a comprehensive Public Information Plan for the project. This plan shall detail target audiences, project impacts and proposed efforts to notify the public about the impacts. The plan shall outline expected major project impacts and methods planned to ensure adequate public awareness of these impacts.

As part of this Public Information Plan, the Design-Build Team will develop the specific list of target audiences for this project. The following groups are identified as typical target audiences to receive informational materials:

- Governmental agencies;
- Municipalities directly affected by construction;
- Transportation services;
- Emergency services;
- Neighborhood groups and private homes;
- Industry and businesses;
- Chambers of Commerce;
- Individual schools affected by the project;
- County/City school systems;
- Media; and
- Any other organization as deemed necessary by the NCTA.

Additionally, the Project Information Plan will include:

- The proposed method of providing appropriate advanced notice to the NCTA and NCDOT;
- Providing updates to the NCTA for inclusion on the NCTA website;
- Recommended strategies for ensuring a proactive approach to public awareness;
- Recommended strategies for ensuring coordination between any construction and/or public awareness efforts on the other projects under construction on this corridor.

The Design-Build Team shall hold an initial project coordination meeting with NCTA one month prior to start of construction to discuss project impacts to the public and the Public Information Plan.

The Design-Build Team shall inform the NCTA at least three (3) weeks in advance of any construction activity that will have significant impact on the public, including the start of construction, major traffic shifts, road closures, ramp closures, detours, night work and project completion.

The amount of public involvement required for this project is directly based on the Design-Build Team's Traffic Control Plan and construction details. As a minimum, the Design-Build Team shall be responsible for the following involvement:

- Public Meetings – Organizing "beginning of construction" meeting(s) which shall be held for area businesses and residents.
- Distribution of Informational Materials - For the "beginning of construction" meetings and for all major traffic impacts and/or road/ramp closures with detour routes, the Design-Build Team shall be responsible for delivering time sensitive informational material directly to portions of the target audience. Distribution responsibilities shall include all resources necessary to hand deliver the informational materials to the affected target audiences.

The Design-Build Team shall include in their Lump Sum Bid price for the project, all costs associated with their involvement in Public Information scope of work except as noted herein.

The NCTA website will be utilized for this project with a unique web page set up specifically for the Triangle Expressway Corridor. The Design-Build Team will be expected to promptly provide materials and updates of project specific information for posting on this website.

As this project is one of several components of the Triangle Expressway Corridor, it is imperative that the public information efforts on this project are carefully coordinated with those of the Triangle Parkway Design-Build Team. Coordination will be necessary in all elements of the public information efforts that relate to any potential overlap of distribution of printed materials to the public, public meetings, press notices, and other assorted elements.

In addition, separate contracts for installation of ITS components, integration of toll technology, and landscaping will be on-going during construction of this project. Marketing efforts for the sale of transponders will also begin shortly after the construction of this project begins.

Careful coordination of public information efforts shall be handled with the NCTA designee in conjunction with the NCTA Director of Outreach and Community Affairs. This will ensure a consistent, positive message is portrayed during all activities.

It is expected that, at a minimum, a monthly Public Information Team meeting will be held including representatives of all entities working for the NCTA on this corridor. NCTA will lead this meeting.

***** PROJECT SPECIAL PROVISION *****

(10-18-95) Z-1

PERMITS

The Design-Build Team's attention is directed to the following permits that have been issued to the NCTA by the authority granting the permit.

PERMIT	AUTHORITY GRANTING THE PERMIT
Dredge and Fill and/or Work in Navigable Waters (404)	U. S. Army Corps of Engineers
Water Quality (401)	Division of Environmental Management, DENR State of North Carolina

The Design-Build Team shall comply with all applicable permit conditions during construction of this project. Those conditions marked by ***** are the responsibility of the NCTA and the Design-Build Team has no responsibility in accomplishing those conditions.

Agents of the permitting authority will periodically inspect the project for adherence to the permits.

The Design-Build Team's attention is also directed to Articles 107-10 and 107-14 of the *Standard Specifications* and the following:

Should the Design-Build Team propose to utilize construction methods (such as temporary structures or fill in waters and/or wetlands for haul roads, work platforms, cofferdams, etc.) not specifically identified in the permit (individual, general, or nationwide) authorizing the project it shall be the Design Build Team's responsibility to coordinate with the Engineer to determine what, if any, additional permit action is required. The Design-Build Team shall also be responsible for initiating the request for the authorization of such construction method by the permitting agency. The request shall be submitted through the Engineer. The Design-Build Team shall not utilize the construction method until it is approved by the permitting agency. The request normally takes approximately 60 days to process; however, no extensions of time or additional compensation will be granted for delays resulting from the Design-Build Team's request for approval of construction methods not specifically identified in the permit.

Where construction moratoriums are contained in a permit condition which restricts the Design-Build Team's activities to certain times of the year, those moratoriums will apply only to the portions of the work taking place in the waters or wetlands provided that activities outside those areas is done in such a manner as to not affect the waters or wetlands.

STANDARD SPECIAL PROVISIONS

PLANT AND PEST QUARANTINES
(Imported Fire Ant, Gypsy Moth, Witchweed, And Other Noxious Weeds)
(3-18-03) DB1 G130

Within Quarantined Area
This project may be within a county regulated for plant and/or pests. If the project or any part of the Design Build Team's operations is located within a quarantined area, thoroughly clean all equipment prior to moving out of the quarantined area. Comply with federal/state regulations by obtaining a certificate or limited permit for any regulated article moving from the quarantined area.

Originating in a Quarantined County
Obtain a certificate or limited permit issued by the N.C. Department of Agriculture/United States Department of Agriculture. Have the certificate or limited permit accompany the article when it arrives at the project site.

Contact
Contact the N.C. Department of Agriculture/United States Department of Agriculture at 1-800-206-9333, 919-733-6932, or **http://www.ncagr.com/plantind/** to determine those specific project sites located in the quarantined area or for any regulated article used on this project originating in a quarantined county.

Regulated Articles Include
1. Soil, sand, gravel, compost, peat, humus, muck, and decomposed manure, separately or with other articles. This includes movement of articles listed above that may be associated with cut/waste, ditch pulling, and shoulder cutting.
2. Plants with roots including grass sod.
3. Plant crowns and roots.
4. Bulbs, corms, rhizomes, and tubers of ornamental plants.
5. Hay, straw, fodder, and plant litter of any kind.
6. Clearing and grubbing debris.
7. Used agricultural cultivating and harvesting equipment.
8. Used earth-moving equipment.
9. Any other products, articles, or means of conveyance, of any character, if determined by an inspector to present a hazard of spreading imported fire ant, gypsy moth, witchweed or other noxious weeds.

REINFORCED BRIDGE APPROACH FILL:
7-18-06 DB4 R 01

Description

This work consists of all work necessary to construct reinforced bridge approach fills in accordance with these provisions and the plans, and as directed by the Engineer.

Materials

Geomembrane

Provide geomembrane that is impermeable, composed of polyethylene polymers or polyvinyl chloride, and meets the following physical requirements:

Property	**Requirements**	**Test Method**
Thickness	25 mils Minimum	ASTM D1593
Tensile Strength at Break	100 lb/inch Minimum	ASTM D638
Puncture Strength	40 lbs Minimum	ASTM D4833
Moisture Vapor Transmission Rate	0.018 ounce/yard^2 per Day Maximum	ASTM E96

Fabric

Refer to Section 1056 for Type 2 Engineering Fabric and the following:

Use a woven fabric consisting of strong rot-proof synthetic fibers such as polypropylene, polyethylene, or polyester formed into a stable network such that the filaments or yarns retain their relative positions to each other.

Fabric Property	**Requirements**	**Test Method**
Minimum Flow Rate	2 gallons/min/square foot	ASTM D 4491

Lamination of fabric sheets to produce the physical requirements of a fabric layer will not be accepted. Furnish letters of certification from the manufacturer with each shipment of the fabric and geomembrane attesting that the material meets the requirements of this provision; however, the material is subject to inspection, test, or rejection by the Engineer at any time.

During all periods of shipment and storage, wrap the geomembrane and fabric in a heavy-duty protective covering to protect the material from ultraviolet rays. After the protective wrapping has been removed, do not leave the material uncovered under any circumstances for longer than 4 days.

Select Material

Provide select material meeting the requirements of Class III, Type 1 or Type 2, or Class V select material of Section 1016 of the *2006 Standard Specifications*. When select material is required under water, use select material class V only, up to one foot above the existing water elevation.

4 inch Diameter Corrugated Drainage Pipe and Fittings

Provide pipe and fittings that meet all the applicable requirements of Section 815 or 816 of the *2006 Standard Specifications*.

Construction Methods

Place the geomembrane and fabric as shown on the plans or as directed by the Engineer. Perform the excavation for the fabric reinforced fill to the limits shown on the plans. Provide an excavated surface free of obstructions, debris, pockets, stumps, and cleared of all vegetation. The geomembrane or fabric will be rejected if it has defects, rips, holes, flaws, deterioration or damage incurred during manufacture, transportation, handling or storage. Lay all layers smooth, and free from tension, stress, folds, wrinkles or creases. Place all the fabric layers with the machine direction (roll direction) parallel to the centerline of the roadway. A minimum roll width of 10.0 feet for the fabric is required. Overlap geomembrane or fabric splices parallel to the centerline of the roadway a minimum of 18 inches. Geomembrane or fabric splices parallel to the backwall face will not be allowed.

Deposit and spread select material in successive, uniform, approximately horizontal layers of not more than 10 inches in depth, loose measurement, for the full width of the cross section, and keep each layer approximately level. Place and compact each layer of select material fill no more than 10 inches thick with low ground pressure equipment. Use hand operated equipment to compact the fill material within three feet of the backwall and wingwalls as directed by the Engineer. Compact select material to a density equal to at least 95% of that obtained by compacting a sample of the material in accordance with AASHTO T99 as modified by NCDOT. Compact the top eight inches of select material to a density to at least 100% of that obtained by compacting a sample of the material in accordance with AASHTO T99 as modified by NCDOT. Density requirements are not applicable to select material, class V; however compact the fill with at least four passes of low ground pressure equipment on the entire surface as directed by the Engineer. The compaction of each layer of select material shall be inspected and approved by NCTA prior to the placement of the next fill layer. No equipment will be allowed to operate on the drainage pipe or any geomembrane/fabric layer until it is covered with at least six inches of fill material. Compaction shall not damage the drainage pipe, geomembrane, or fabric under the fill. Cover the geomembrane/fabric with a layer of fill material within four days after placement of the geomembrane/fabric. Geomembrane and fabric that are damaged as a result of installation will be replaced as directed by NCTA at no additional cost.

Place the geomembrane on the ground, and attach and secure it tightly to the vertical face of the backwall and wingwalls with adhesives, duct-tape, nails or any other method approved by the Engineer. Place the first fabric layer on the surface of the geomembrane with the same dimensions of the geomembrane. No material or void is allowed between the geomembrane and the first fabric layer. Place and fold the remaining fabric layers on the edges as shown on the plans or as directed by the Engineer. Provide vertical separation between fabric layers as specified on the plans. The number of fabric layers will be shown in the plans.

Place four inch diameter perforated drainage pipe along the base of the backwall and sloped to drain as shown on the plans. Completely wrap perforated drainage pipe and #78M stone with Type 2 Engineering Fabric as shown on the plan detail. Install a pipe sleeve through the bottom of or under the wing wall prior to placing concrete for the wing wall. The pipe sleeve shall be of adequate strength to withstand the wingwall load. Place the pipe sleeve in position to allow the drainage pipe to go through the wing wall with a proper slope. Connect four-inch diameter

nonperforated (plain) drainage pipe with a coupling to the perforated pipe near the inside face of the wingwall. Place the nonperforated drainage pipe through the pipe sleeve, extend down to the toe of the slope and connect, to a ditch or other drainage systems as directed by the Engineer. For bridge approaches in cut sections where no side slope is available, direct the drainage pipe outlet to the end slope down to the toe using elbows as directed by the Engineer.

AGGREGATE BASE COURSE:

12-19-06 SP5R03

Revise the *2006 Standard Specifications* as follows:

Page 5-11, Article 520-5 Hauling and Placing Aggregate Base Material, 6th paragraph, replace the first sentence with the following:

Base course that is in place on November 15 shall have been covered with a subsequent layer of pavement structure or with a sand seal. Base course that has been placed between November 16 and March 15 inclusive shall be covered within 7 calendar days with a subsequent layer of pavement structure or with a sand seal.

PREPARATION OF SUBGRADE AND BASE

(1-16-96) DB5 R05

On mainline portions and ramps of this project, prepare the subgrade and base beneath the pavement structure in accordance with the applicable sections of the Standard Specifications except use an automatically controlled fine grading machine utilizing string lines, laser controls, or other approved methods to produce final subgrade and base surfaces meeting the lines, grades, and cross sections required by the plans or established by the Engineer.

ASPHALT PAVEMENTS - SUPERPAVE

(9-19-06) (Rev 12-18-07) DB6 R01

Revise the *2006 Standard Specifications* as follows:

Page 6-2, Article 600-9 Measurement and Payment, delete the second paragraph.

Page 6-12, Subarticle 609-5(C)2, Required Sampling and Testing Frequencies, first partial paragraph at the top of the page, delete last sentence and add the following:

> If the Engineer allows the mix to remain in place, payment will be made in accordance with Article 105-3.

Page 6-12, Subarticle 609-5(C)2, QUALITY CONTROL MINIMUM SAMPLING AND TESTING SCHEDULE

First paragraph, delete and replace with the following.

Sample and test the completed mixture from each mix design per plant per year at the following minimum frequency during mix production:

Second paragraph, delete the fourth sentence, and replace with the following

When daily production of each mix design exceeds 100 tons and a regularly scheduled full test series random sample location for that mix design does not occur during that day's production, perform at least one partial test series consisting of Items A and B in the schedule below.

Page 6-12, Subarticle 609-5(C)2(c) Maximum Specific Gravity, add after (AASHTO T 209):

or ASTM D 2041

Page 6-13, last line and on page and Page 6-14, Subarticle 609-5(C)(2)(e) Retained Tensile Strength, add a heading before the first paragraph as follows:

(1) Option 1

Insert the following immediately after the first paragraph:

(2) Option 2

Mix sampled from truck at plant with one set of specimens prepared by the Contractor and then tested jointly by QA and QC at a mutually agreed upon lab site within the first 7 calendar days after beginning production of each new mix design.

Second paragraph, delete the and replace with the following:

Test all TSR specimens required by either option noted above on either a recording test press or a test press that maintains the peak load reading after the specimen has broken.

Subarticle 609-5(C)(3) Control Charts, delete the second sentence of the first paragraph and replace with the following:

For mix incorporated into the project, record full test series data from all regularly scheduled random samples or directed samples that replace regularly scheduled random samples, on control charts the same day the test results are obtained.

Page 6-15, Subarticle 609-5(C)(3) Control Charts, first paragraph on this page, delete the last sentence and substitute the following:

Denote the moving average control limits with a dash green line and the individual test limits with a dash red line.

Subarticle 609-5(C)(3)(a), (b) and (c), replace (a) (b) and (c) with the following:

(a) A change in the binder percentage, aggregate blend, or G_{mm} is made on the JMF, or,

(b) When the Contractor elects to stop or is required to stop production after one or two moving average values, respectively, fall outside the moving average limits as outlined in subarticle 609-5(C)6 or,

(c) If failure to stop production after two consecutive moving averages exceed the moving average limits occurs, but production does stop at a subsequent time, re-establish a new moving average beginning at the actual production stop point.

Subarticle 609-5(C)(4) Control Limits, replace the first paragraph and the CONTROL LIMITS Table on page 6-16 with the following.

The following are established as control limits for mix production. Apply the individual limits to the individual test results. Control limits for the moving average limits are based on a moving average of the last 4 data points. Apply all control limits to the applicable target source.

CONTROL LIMITS

Mix Control Criteria	Target Source	Moving Average Limit	Individual Limit
2.36 mm Sieve	JMF	±4.0 %	±8.0 %
0.075mm Sieve	JMF	±1.5 %	±2.5 %
Binder Content	JMF	±0.3 %	±0.7 %
VTM @ N_{des}	JMF	±1.0 %	±2.0 %
VMA @ N_{des}	Min. Spec. Limit	-0.5%	-1.0%
$P_{0.075}$/ P_{be} Ratio	1.0	±0.4	±0.8
%G_{mm} @ N_{ini}	Max. Spec. Limit	N/A	+2.0%
TSR	Min. Spec. Limit	N/A	- 15%

Page 6-16, Subarticle 609-5(C)(5) Warning Bands, delete this subarticle in its entirety.

Pages 6-16 through 6-19, Subarticle 609-5(C)(6), delete the word "warning" and substitute the words "moving average".

Page 6-16, Subarticle 609-5(C)(6) Corrective Actions, first paragraph, first sentence, delete and replace with the following:

Immediately notify the Engineer when moving averages exceed the moving average limits.

Page 6-17, third full paragraph, delete and replace with the following:

Failure to stop production when required due to an individual mix test not meeting the specified requirements will subject all mix from the stop point tonnage to the point when the next individual test is back on or within the moving average limits, or to the tonnage point when production is actually stopped, whichever occurs first, to being considered unacceptable.

Sixth full paragraph, delete the first, second, and third sentence and replace with the following:

Immediately notify the Engineer when any moving average value exceeds the moving average limit. If two consecutive moving average values for any one of the mix control criteria fall outside the moving average limits, cease production of that mix, immediately notify the Engineer of the stoppage, and make adjustments. The Contractor may elect to stop production after only one moving average value falls outside the moving average limits.

Page 6-18, Subarticle 609-5(C)(6) Corrective Actions second full paragraph, delete and replace with the following:

If the process adjustment improves the property in question such that the moving average after four additional tests is on or within the moving average limits, the Contractor may continue production with no reduction in payment

Page 6-18, delete the third and fourth full paragraphs, including the Table for Payment for Mix Produced in the Warning Bands and substitute the following:

If the adjustment does not improve the property in question such that the moving average after four additional individual tests is outside the moving average limits, the mix will be evaluated for acceptance in accordance with Article 105-3. Reduced payment for or removal of the mix in question will be applied starting from the plant sample tonnage at the stop point to the sample tonnage when the moving average is on or within the moving average limits. In addition, any mix that is obviously unacceptable will be rejected for use in the work.

Page 6-19, First paragraph, delete and replace with the following:

Failure to stop production and make adjustments when required due to two consecutive moving average values falling outside the moving average limits will subject all mix

produced from the stop point tonnage to the tonnage point when the moving average is back on or within the moving average limits or to the tonnage point when production is actually stopped, whichever occurs first, to being considered unacceptable. Remove this material and replaced with materials which comply with the Specifications at no additional costs to the Department, unless otherwise approved. Payment will be made for the actual quantities of materials required to replace the removed quantities, not to exceed the original amounts.

Page 6-20, Subarticle 609-5(D)(1) General, delete the third full paragraph, and replace with the following:

Perform the sampling and testing at the minimum test frequencies as specified above. Should the density testing frequency fail to meet the minimum frequency as specified above, all mix without the required density test representation will be considered unsatisfactory. If the Engineer allows the mix to remain in place, payment will be made in accordance with Article 105-3.

Page 6-23, Subarticle 609-5(D)(5) Limited Production Procedure, delete the first paragraph including (a), (b), (c) and substitute the following:

Proceed on limited production when, for the same mix type and on the same contract, one of the following conditions occur (except as noted in the first paragraph below).

(a) Two consecutive failing lots, except on resurfacing*
(b) Three consecutive failing lots on resurfacing*
(c) Two consecutive failing nuclear control strips.

* Resurfacing is defined as the first new uniform layer placed on an existing pavement.

Page 6-28, Subarticle 610-3(A) Mix Design-General, third sentence of the fourth paragraph:

Substitute 20% for 15%

First, second and third sentences of the fifth paragraph:

Substitute 20% for 15%

Page 6-28, Subarticle 610-3(A) Mix Design-General, add the following as the fourth paragraph:

Reclaimed Asphalt Pavement (RAP) or Reclaimed Asphalt Shingles (RAS) may be incorporated into asphalt plant mixes in accordance with Article 1012-1 and the following applicable requirements.

Page 6-35, Table 610-3 delete and replace with the following:

TABLE 610-3
ASPHALT PLACEMENT- MINIMUM TEMPERATURE REQUIREMENTS

Asphalt Concrete Mix Type	Minimum Air Temperature	Minimum Surface Temperature
ACBC, Type B 25.0B, C, B 37.5C	35°F	35°F
ACIC, Type I 19.0B, C, D	35°F	35°F
ACSC, Type S 4.75A, SF 9.5A, S 9.5B	40°F	50°F *
ACSC, Type S 9.5C, S 12.5C	45°F	50°F
ACSC, Type S 9.5D, S 12.5D	50°F	50°F

* 35°F if surface is soil or aggregate base for secondary road construction.

Page 6-44, Article 610-8 Spreading and Finishing, third full paragraph, replace the first sentence with the following:

Use the 30 foot minimum length mobile grade reference system or the non-contacting laser or sonar type ski *with at least four referencing stations mounted on the paver at a minimum length of 24 feet* to control the longitudinal profile when placing the initial lanes and all adjacent lanes of all layers, including resurfacing and asphalt in-lays, unless otherwise specified or approved.

Page 6-50, Article 610-13 Density Acceptance, delete the second paragraph and replace with the following:

As an exception, when the first layer of mix is a surface course and is being placed directly on an unprimed aggregate or soil base, the layer will be included in the "Other" construction category.

Page 6-53, Article 620-4 Measurement and Payment, sixth paragraph, delete the last sentence.

Page 6-54, Article 620-4 Measurement and Payment, add the following pay item:

Pay Item	**Pay Unit**
Asphalt Binder for Plant Mix, Grade PG 70-28	Ton

Page 6-69, Table 660-1 Material Application Rates and Temperatures, add the following:

Type of Coat	Grade of Asphalt	Asphalt Rate gal/yd^2	Application Temperature ^{o}F	Aggregate Size	Aggregate Rate lb./sq. yd. Total
Sand Seal	CRS-2 or CRS-2P	0.22-0.30	150-175	Blotting Sand	12-15

Page 6-75, Subarticle 660-9(B), add the following as sub-item (5)

(5) Sand Seal

Place the fully required amount of asphalt material in one application and immediately cover with the seal coat aggregate. Uniformly spread the fully required amount of aggregate in one application and correct all non-uniform areas prior to rolling.

Immediately after the aggregate has been uniformly spread, perform rolling.

When directed, broom excess aggregate material from the surface of the seal coat.

When the sand seal is to be constructed for temporary sealing purposes only and will not be used by traffic, other grades of asphalt material meeting the requirements of Articles 1020-6 and 1020-7 may be used in lieu of the grade of asphalt required by Table 660-1 when approved.

Page 6-76, Article 661-1 Description, add the following as the 2nd paragraph:

Provide and conduct the quality control and required testing for acceptance of the UBWC in accordance with "Quality Management System for Asphalt Pavements (OGAFC, PADL, and Ultra-Thin HMA Version)", included in the contract.

Page 6-80, Subarticle 661-3(A) Equipment, add the following as the first paragraph:

Use asphalt mixing plants in accordance with Article 610-5.

Page 10-41, Table 1012-1, delete the last row of entries for OGAFC and add the following:

Mix Type	Course Aggregate Angularity [b] ASTM D5821	Fine Aggregate Angularity % Minimum AASHTO T304 Method A	Sand Equivalent % Minimum AASHTO T176	Flat & Elongated 5:1 Ratio % Maximum ASTM D4791 Section 8.4
S 9.5 D	100/100	45	50	10
OGAFC	100/100	N/A	N/A	10
UBWC	100/85	40	45	10

Delete Note (c) under the Table 1012-1 and replace with the following:

(c) Does not apply to Mix Types SF 9.5A and S 9.5B.

Page 10-43 through 10-45, Subarticle 1012-1(G), delete this in its entirety and replace with the following:

(G) Reclaimed Asphalt Pavement (RAP)

(1) Mix Design RAP

Incorporate RAP from stockpiles or other sources that have been tested for uniformity of gradation and binder content prior to use in an asphalt mix design. Use reclaimed asphalt pavement that meets all requirements specified for *one of* the following *two* classifications.

(a) Millings

Existing reclaimed asphalt pavement (RAP) that is removed from its original location by a milling process as specified in Section 607. Millings should be such that it has a uniform gradation and binder content and all materials will pass a 2" sieve prior to introduction into the plant mixer unit.

(b) Processed RAP

RAP that is processed in some manner (possibly by crushing and/or use of a blending method) to produce a uniform gradation and binder content in the RAP prior to use in a recycled mix. Process RAP so that all materials have a uniform gradation and binder content and will pass a 2" sieve prior to introduction into the plant mixer unit.

(2) Mix Production RAP

During mix production use RAP that meets the criteria for one of the following categories:

(a) Mix Design RAP

RAP contained in the mix design stockpiles as described above may be used in all applicable JMFs. These stockpiles have been pretested: however, they are subject to required QC/QA testing in accordance with Subarticle 609-5(C)(2).

(b) New Source RAP

New Source RAP is defined as any acceptable material which was not included in the stockpile or other source when samples were taken for mix design purposes. Process new source RAP so that all materials have a uniform gradation and binder content and will pass a 2" sieve prior to introduction into the plant mixer unit.

After a stockpile of processed RAP or millings has been sampled and mix designs made from these samples, do not add new source RAP to the original stockpile without prior field testing to insure gradation and binder uniformity. Sample and test new source RAP before blending with the existing stockpile.

Store new source RAP in a separate stockpile until the material can be sampled and tested for comparison with the original recycled mix design data. New source RAP may also be placed against the existing stockpile in a linear manner provided it is sampled for mix design conformity prior to its use in the recycled mix.

Unprocessed RAP is asphalt material that was not milled and/or has not been processed to obtain a uniform gradation and binder content and is not representative of the RAP used during the applicable mix design. Unprocessed RAP shall not be incorporated into any JMFs prior to processing. Different sources of unprocessed RAP may be stockpiled together provided it is generally free of contamination and will be processed prior to use in a recycled mix. RAP contamination in the form of excessive dirt, debris, clean stone, concrete, etc. will not be allowed. Incidental amounts of dirt, concrete, and clean stone may be acceptable. Unprocessed RAP may be processed and then classified as a new source RAP as described above.

Field approval of new source RAP will be based on Table 1012-2 below and volumetric mix properties on the mix with the new source

RAP included. Provided the Table 1012-2 tolerances are met, volumetric properties of the new mix will then be performed. If all volumetric mix properties meet the mix design criteria for that mix type, the new source RAP may continue to be used.

If the gradation, binder content, or any of the volumetric mix properties are not within the allowable tolerances of Table 1012-2, do not use the new source RAP unless approved by the Engineer. The Contractor may elect to either not use the stockpile, to request an adjustment to the JMF, or to redesign the mix.

TABLE 1012-2
NEW SOURCE RAP GRADATION and BINDER TOLERANCES
(Apply Tolerances to Mix Design Data)

Mix Type	0-20% RAP			20^{+}-25 % RAP			25^{+} % RAP		
Sieve (mm)	Base	Inter.	Surf.	Base	Inter.	Surf.	Base	Inter.	Surf.
P_b %	± 0.7%			± 0.4%			± 0.3%		
25.0	±10	-	-	±7	-	-	±5	-	-
19.0	±10	±10	-	±7	±7	-	±5	±5	-
12.5	-	±10	±6	-	±7	±3	-	±5	±2
9.5	-	-	±8	-	-	±5	-	-	±4
4.75	±10	-	±10	±7	-	±7	±5	-	±5
2.36	±8	±8	±8	±5	±5	±5	±4	±4	±4
1.18	±8	±8	±8	±5	±5	±5	±4	±4	±4
0.300	±8	±8	±8	±5	±5	±5	±4	±4	±4
0.150	-	-	±8	-	-	±5	-	-	±4
0.075	±4	±4	±4	±2	±2	±2	±1.5	±1.5	±1.5

ASPHALT BINDER CONTENT OF ASPHALT PLANT MIXES

(10-6-05) DB6 R15

The approximate asphalt binder content of the asphalt concrete plant mixtures used on this project will be as follows:

Asphalt Concrete Base Course	Type B 25.0_	4.3%
Asphalt Concrete Intermediate Course	Type I 19.0_	4.7%
Asphalt Concrete Surface Course	Type S 4.75_	7.0%
Asphalt Concrete Surface Course	Type SF 9.5_	6.5%
Asphalt Concrete Surface Course	Type S 9.5_	6.0%
Asphalt Concrete Surface Course	Type S 12.5_	5.5%

The actual asphalt binder content will be established during construction by the CEI firm within the limits established in the *2006 Standard Specifications* or Project Special Provisions.

FINAL SURFACE TESTING - ASPHALT PAVEMENTS
(4/16/07) DB6R45

Perform acceptance testing of the longitudinal profile of the finished pavement surface in accordance with these provisions using a North Carolina Hearne Straightedge (Model No. 1). Furnish and operate the straightedge to determine and record the longitudinal profile of the pavement on a continuous graph. Final surface testing is an integral part of the paving operation and is subject to observation and inspection by the Engineer as deemed necessary.

Push the straightedge manually over the pavement at a speed not exceeding 2 miles per hour. For all lanes, take profiles in the right wheel path approximately 3 ft from the right edge of pavement in the same direction as the paving operation, unless otherwise approved due to traffic control or safety considerations. Make one pass of the straightedge in each full width travel lane. The full lane width should be comparable in ride quality to the area evaluated with the Hearne Straightedge. If deviations exist at other locations across the lane width, utilize a 10 foot non-mobile straightedge or the Hearne Straightedge to evaluate which areas may require corrective action. Take profiles as soon as practical after the pavement has been rolled and compacted but in no event later than 24 hours following placement of the pavement, unless otherwise authorized by the Engineer. Take profiles over the entire length of final surface travel lane pavement exclusive of -Y- line travel lanes less than or equal to 300 feet in length, turn lanes less than or equal to 300 feet in length, structures, approach slabs, paved shoulders, loops, and tapers or other irregular shaped areas of pavement, unless otherwise approved by the Engineer. Test in accordance with this provision all mainline travel lanes, full width acceleration or deceleration lanes, -Y- line travel lanes greater than 300 feet in length, ramps, full width turn lanes greater than 300 feet in length, and collector lanes.

At the beginning and end of each day's testing operations, and at such other times as determined necessary by the Engineer, operate the straightedge over a calibration strip so that the Engineer can verify correct operation of the straightedge. The calibration strip must be a 100 ft section of pavement that is reasonably level and smooth. Submit each day’s calibration graphs with that day’s test section graphs to the Engineer. Calibrate the straightedge in accordance with the current NCDOT procedure titled "North Carolina Hearne Straightedge - Calibration and Determination of Cumulative Straightedge Index". Copies of this procedure may be obtained from the Department's Pavement Construction Section.

Plot the straightedge graph at a horizontal scale of approximately 25 ft per inch with the vertical scale plotted at a true scale. Record station numbers and references (bridges, approach slabs, culverts, etc.) on the graphs, and distances between references/stations must not exceed 100 ft. Have the operator record the Date, Project No., Lane Location, Wheel Path Location, Type Mix, and Operator’s Name on the graph.

Upon completion of each day's testing, evaluate the graph, calculate the Cumulative Straightedge Index (CSI), and determine which lots, if any, require corrective action. Document the evaluation of each lot on a QA/QC-7 form. Submit the graphs along with the completed

QA/QC-7 forms to the Engineer, within 24 hours after profiles are completed, for verification of the results. The Engineer will furnish results of their acceptance evaluation to the Design-Build Team within 48 hours of receiving the graphs. In the event of discrepancies, the Engineer's evaluation of the graphs will prevail for acceptance purposes. The Engineer will retain all graphs and forms.

Use blanking bands of 0.2 inches, 0.3 inches, and 0.4 inches to evaluate the graph for acceptance. The 0.2 inch and 0.3 inch blanking bands are used to determine the Straightedge Index (SEI), which is a number that indicates the deviations that exceed each of the 0.2 inch and 0.3 inch bands within a 100 ft test section. The Cumulative Straightedge Index (CSI) is a number representing the total of the SEIs for one lot, which consist of not more than 25 consecutive test sections. In addition, the 0.4 inch blanking band is used to further evaluate deviations on an individual basis. The Cumulative Straightedge Index (CSI) will be determined by the Engineer in accordance with the current procedure titled "North Carolina Hearne Straightedge - Calibration and Determination of Cumulative Straightedge Index".

The pavement will be accepted for surface smoothness on a lot by lot basis. A test section represents pavement one travel lane wide not more than 100 ft in length. A lot will consist of 25 consecutive test sections, except that separate lots will be established for each travel lane, unless otherwise approved by the Engineer. In addition, full width acceleration or deceleration lanes, ramps, turn lanes, and collector lanes, will be evaluated as separate lots.

If during the evaluation of the graphs, 5 lots (mainline travel lanes and full width -Y- line travel lanes greater than 300 feet in length only) require corrective action, then proceed on limited production for unsatisfactory laydown in accordance with Article 610-12. Proceeding on limited production is based upon the Design-Build Team's initial evaluation of the straightedge test results and must begin immediately upon obtaining those results. Additionally, the Engineer may direct the Design-Build Team to proceed on limited production in accordance with Article 610-12 due to unsatisfactory laydown or workmanship.

Limited production for unsatisfactory laydown is defined as being restricted to the production, placement, compaction, and final surface testing of a sufficient quantity of mix necessary to construct only 2500 feet of pavement at the laydown width. Once this lot is complete, the final surface testing graphs will be evaluated jointly by the Design-Build Team and the Engineer. Remain on limited production until such time as acceptable laydown results are obtained or until three consecutive 2500 foot sections have been attempted without achieving acceptable laydown results. The Engineer will determine if normal production may resume based upon the CSI for the limited production lot and any adjustments to the equipment, placement methods, and/or personnel performing the work. Once on limited production, the Engineer may require the Design-Build Team to evaluate the smoothness of the previous asphalt layer and take appropriate action to reduce and/or eliminate corrective measures on the final surface course. Additionally, the Design-Build Team may be required to demonstrate acceptable laydown techniques off the project limits prior to proceeding on the project.

If the Design-Build Team fails to achieve acceptable laydown results after three consecutive 2500 foot sections have been attempted, cease production of that mix type until such time as the cause of the unsatisfactory laydown results can be determined.

As an exception, the Engineer may grant approval to produce a different mix design of the same mix type if the cause is related to mix problem(s) rather than laydown procedures. If production of a new mix design is allowed, proceed under the limited production procedures detailed above.

After initially proceeding under limited production, the Design-Build Team shall immediately notify the Engineer if any additional lot on the project requires corrective action. The Engineer will determine if limited production procedures are warranted for continued production.

If the Design-Build Team does not operate by the limited production procedures as specified above, the 5 lots, which require corrective action, will be considered unacceptable and may be subject to removal and replacement.

The adjustment schedule for the Cumulative Straightedge Index (CSI) test results per lot is as follows:

Adjustment Schedule for Cumulative Straightedge Index (CSI) (Obtained by adding SE Index of up to 25 consecutive 100 ft. (30m) sections)		
***CSI**	**ACCEPTANCE CATEGORY**	**CORRECTIVE ACTION**
0-0	Acceptable	None
1-0 or 2-0	Acceptable	None
3-0 or 4-0	Acceptable	None
Any other Number	Unacceptable	Required

***Either Before or After Corrective Actions**

Correct any deviation that exceeds a 0.3 inch blanking band such that the deviation is reduced to 0.2 inches or less.

Corrective actions shall be performed at the Design-Build Team's expense and shall be presented for evaluation and approval by the Engineer prior to proceeding. Any corrective action performed shall not reduce the integrity or durability of the pavement which is to remain in place. Corrective action for deviation repair may consist of overlaying or removing and replacing. Scraping of the pavement with any blade type device will not be allowed as a corrective action. Provide overlays of the same type mix, full roadway width, and to the length and depth established by the Engineer. Tapering of the longitudinal edges of the overlay will not be allowed.

Take corrective actions as specified if the CSI indicates “Required” corrective action. The CSI after corrective action should meet or exceed “Acceptable” requirements.

Where corrective action is required, the test section(s) requiring corrective action will be retested, unless the Engineer directs the retesting of the of the entire lot.

Test sections and/or lots that are initially tested by the Design-Build Team which indicate excessive deviations such that corrective action is required, may be re-rolled with asphalt rollers while the mix is still warm and in a workable condition, to possibly correct the problem. In this instance, reevaluation of the test section(s) must be completed within 24 hours of pavement placement and these test results will serve as the initial test results.

Areas excluded from testing by the N.C. Hearne Straightedge will be tested by using a non-mobile 10-foot straightedge. Assure that the variation of the surface from the testing edge of the straightedge between any two contact points with the surface is not more than 1/8 inch. Correct deviations exceeding the allowable tolerance in accordance with the corrective actions specified above, unless the Engineer permits other corrective actions.

Furnish the North Carolina Hearne Straightedge(s) necessary to perform this work. Maintain responsibility for all costs relating to the procurement, handling, and maintenance of these devices. The Department has entered into a license agreement with a manufacturer to fabricate, sell, and distribute the N.C. Hearne Straightedge. The Department's Pavement Construction Section may be contacted for the name of the current manufacturer and the approximate price of the straightedge.

TYING PROPOSED CONCRETE PAVEMENT TO EXISTING CONCRETE PAVEMENT

7-1-95 DB7 R05

Tie proposed concrete pavement on this project to existing concrete pavement in accordance with the detail shown in the plans and the following provision:

1. Drill holes in the existing concrete pavement 1/8" greater than the diameter of the dowel bar. After drilling, blow the hole out with air and allow to dry.

2. Next, place the cement grout or epoxy resin in the back of the dowel hole. The placement of grout can be achieved by using a flexible tube with a long nose that places the material in the back of the dowel hole; the placement of epoxy-type materials can be achieved by using a cartridge with a long nozzle that dispenses the material to the rear of the dowel hole.

3. Insert the dowel into the hole with a slight twisting motion so that the material in the back of the hole is forced up and around the dowel bar to ensure a uniform coating of the anchoring material over the dowel bar.

4. Place a thin nylon or plastic grout retention disk, (1/16" minimum thickness) manufactured to slip tightly over the dowel over the dowel and against the slab face to prevent the anchoring material from flowing out of the hole, and to create an effective face at the entrance of the dowel hole.

TYING PROPOSED CONCRETE PAVEMENT TO PROPOSED ASPHALT PAVEMENT

7-1-95 DB7 R10

Tie the proposed concrete pavement on this project into proposed asphalt pavements in accordance with the detail shown in the plans and the following provisions:

1. Bevel the end of the proposed concrete pavement on a 1:1 slope and eliminate the dowels.

An asphalt connection will be required from the end of the proposed concrete pavement to the proposed asphalt pavement. Construct this connection in accordance with the details in the plans or as directed by the Engineer.

TYING PROPOSED ASPHALT PAVEMENT TO EXISTING CONCRETE PAVEMENT

7-1-95 DB6 R40

Tie the proposed asphalt pavement on this project to the existing concrete pavement in accordance with the contract documents and the following provision:

Bevel the end of the existing concrete pavement on a 1:1 slope prior to placing the asphalt pavement. Saw the bevel with a concrete saw as directed by the Engineer prior to breaking the concrete away.

BEGINNING AND ENDING OF CONCRETE PAVEMENT

7-1-95 DB7 R15

Install dowels in the concrete pavement at its beginning and ending to allow for future tie-in of concrete pavement in accordance with the detail in the plans and as directed by the Engineer.

CONCRETE PAVEMENTS AND SHOULDERS

(10-16-07) (Rev 11-20-07) SP7R20

Revise the *2006 Standard Specifications* as follows:

SECTION 700
GENERAL REQUIREMENT FOR PORTLAND CEMENT CONCRETE PAVING

Page 7-1, Article 700-3, Concrete Hauling Equipment, delete the fourth paragraph and substitute the following:

> For concrete hauled in a transit mix (ready mix) truck, use Table 1000-2 to determine the maximum elapsed time. For concrete hauled in other equipment, minimize the elapsed time to be 60 minutes or less, unless otherwise approved. The elapsed time is defined as the period from first contact between mixing water and cement until the entire operation of placing and finishing up to micro-surfacing, including corrective measures if necessary, has been completed.

Page 7-2, Article 700-4 Preparation of Subgrade and Base, fourth paragraph, delete the 3rd and 4th sentence and substitute the following:

Set pins at a distance no farther than 50 feet apart. When located on a vertical curve, set pins no farther than 25 feet apart.

Page 7-3, Article 700-5 (A)(4) delete the 2nd paragraph and substitute the following:

Where additional pavement, aggregate or soil must be placed adjacent to new pavement by machine methods, do not place it until the concrete has attained a flexural strength of at least 450 psi.

Page 7-5, Article 700-7, Finishing, insert the following as the second sentence.

The use of excessive water for finishing will not be allowed.

Page 7-5, Subarticle 700-8(C), Hot Weather, 1st sentence

Substitute 90°F for 80°F.

Page 7-7, 700-11(A) General, delete the fourth paragraph and substitute the following:

Immediately after sawing the joint to the dimensions shown on the plans, completely remove the resulting slurry from the joint. Immediately reapply curing membrane following the sawing operation to damaged areas in the vicinity of the joint.

Page 7-8, insert the following as Subarticle 700-11(G)

(G) Verification of Dowel Bar Alignment

Use either properly secured dowel baskets or a dowel bar inserter, provided the ability to correctly locate and align the dowels at the joints is demonstrated as described below.

Provide a calibrated magnetic imaging device that will document dowel bar location and alignment. Utilize this device for process control and make necessary adjustment to ensure the dowels are placed in the correct location.

Scan at least 25% percent of the joints in the initial placement or 1.0 mile of pavement, whichever is greater, at random intervals throughout the pavement each time the paving train is mobilized.

Scan all joints in this initial section if the dowel bars exhibit side shift, horizontal displacement, vertical displacement, horizontal misalignment, or vertical misalignment, above the allowable tolerances defined below. In addition, continue scanning 25% of the joints until it is established that the dowel bar

inserter or secured dowel basket assemblies are consistently orienting the dowel bars at the correct location (meeting the tolerances defined below). Once the engineer determines that consistency is established, the contractor may reduce the percentage of scanned joints to 10%. At any time, inconsistency in the placement of the dowel bars become evident, additional scanning may be required up to 100% of the joints.

If consistency of the proper dowel bar alignment cannot be established within a reasonable time frame, the Engineer will have the option of suspending the paving operation.

Provide a report of the scanned joints. The report should include the station and lane of the joint scanned, as well as the horizontal location, depth, horizontal and vertical misalignment, and lateral displacement (side shift) of each dowel bar in the joint. The joint score described below should also be provided in the report.

Side shift is defined as the position of the center of the dowel bar in relation to the sawed joint. The maximum allowable side shift is 2 inches.

Horizontal displacement is defined as difference in the actual dowel bar location from its theoretical position as detailed in the standard details. The maximum allowable horizontal displacement is 2 inches.

Vertical displacement (depth) is the difference in the actual dowel bar location from the theoretical midpoint of the slab. The maximum allowable vertical displacement depth is 1/2 inch.

Dowel bar misalignment is defined as the difference in position of the dowel bar ends with respect to each other. Vertical misalignment is measured in the vertical axis whereas horizontal misalignment is measured in the horizontal axis.

Determine a joint score for each joint scanned. The joint score is a measure of combined effects of horizontal and vertical misalignment. The joint score is determined by summing the product of the weight (shown in the table below) and the number of bars in each misalignment category and adding 1. The vertical and horizontal dowel misalignment should be evaluated and the greater misalignment shall be utilized in determining the joint score.

Misalignment Category, mm	**Weight**
0 <= d <= 15	0
15< d <= 20	2
20< d <= 25	4
25 < d <= 38	5
38 <= d	10

where d is the individual dowel bar misalignment.

A joint that has a joint score of 10 or greater will be considered locked.

Identify any scanned joints where the opposing horizontal or vertical misalignment of any two bars within the joint exceeds 1 inch. This situation will be considered a locked joint.

When a locked joint as defined above is discovered, scan the two joints immediately adjacent to the locked joint. If either of the adjacent joints are deemed to be locked, provide a written proposal to address the dowel misalignment for each locked joint. No corrective action should be performed without written approval.

Any and all corrective action necessitated by improper joint alignment shall be at no cost to the Department.

SECTION 710
CONCRETE PAVEMENT

Page 7-12. Article 710-1, Description, 1st sentence

Insert *verifying dowel bar alignment*; after the words *sealing joints*;

Page 7-12. Article 710-3, Composition of Concrete, insert the following as the 2nd paragraph.

In addition to Section 1000 of the *Standard Specifications*, design all concrete pavement mixes in accordance with the Shilstone Design method.

Page 7-13, Article 710-6, Finishing, if the full diamond grind option is proposed, then delete the third and fourth paragraphs of this Article and substitute the following:

Following the finishing of the pavement by screeding, floating, and checking with straightedges, further finish the surface to provide a uniform texture utilizing an Astroturf drag. Pull the Astroturf drag in the longitudinal direction.

Page 7-13, Article 710-6, Finishing, insert the following at the end of the 6th paragraph.

Provide a textured surface with an average texture depth of 0.8 mm as tested in accordance with ASTM E 965 (*Test Method for Measuring Pavement Macrotexture Depth Using a Sand Volumetric Technique*) with no single test having a texture depth of 0.5 mm or less. Perform four randomly located tests in accordance with ASTM E 965 within the initial pavement lot of each mobilization and provide test results to the Engineer. A lot is defined in Article 710-4. If the average of the four tests does not meet the above criteria, make appropriate changes to the surface texture operations and test the next lot as detailed above. Once the surface texture process is established to meet minimum texture requirements, maintain consistency within the operation to provide the

above minimum texture depth. Perform additional sand patch tests in accordance with ASTM E 965 when directed.

Should the surface texture become damaged or reduced by rain, grinding or any other action, reestablish or restore surface texture by an approved method.

Page 7-14, Article 710-7, Final Surface Testing, delete the last sentence of the 1st paragraph.

Page 7-14, Article 710-7, Final Surface Testing, delete the 5th, 6th, 7th, 8th, and 9th paragraphs and substitute the following:

A ProScan electronic scanner with motorized paper transport will be used to evaluate the profilogram. Other types of automated trace reduction equipment may be used if approved by the Department's Pavement Construction Section.

Furnish the profilogram to the Engineer within two working days after diamond grinding of the pavement and again within two working days after any corrections are made.

Construct the concrete pavement so that the completed concrete pavement surface has a profile index (PI) along any line tested not exceeding 20 inches per mile (315 mm per km), as determined with a zero blanking band, over any 600 foot (182.9 m) section of pavement. Individual deviations must not exceed 0.3 inches (7.6 mm) over any 25 foot (7.6 m) length of the line tested. Correct areas found to exceed this tolerance by grinding and texturing or using other approved corrective measures that produce smooth and skid resistant surfaces.

In the event the Contractor does not produce a final pavement surface that will meet the requirements of this special provision, the Engineer may suspend the Contractor's operations until such time as the Contractor satisfies the Engineer, by making necessary adjustments to equipment, methods, or personnel, that he can produce a pavement surface that will meet these surface requirements.

Page 7-15, Article 710-9, Thickness Tolerances,

Delete the 4th and 5th paragraph and substitute with the following:

When the measurement of the core from a lot is not deficient more than 0.2" from the plan thickness, full payment will be made. When such measurement is deficient by more than 0.2" from the plan thickness, take 2 additional cores at random within the lot and determine the average of the 3 cores. In determining the average thickness of the pavement, the Engineer will use all 3 core measurements with the exception that measurements which are in excess of the plan thickness by more than 0.2" will be considered as the plan thickness plus 0.2" and measurements which are deficient of the plan thickness by more than 1.0" will be considered as the plan thickness minus 1.0 inch. Measurements which are less than the plan thickness by more than 1.0" will not be included in the average. If the average measurement

of these 3 cores is not deficient more than 0.2" from the plan thickness, full payment will be made. If the average measurement of the 3 cores is deficient more than 0.2" but not more than 1.0" from the plan thickness, an adjusted unit price in accordance with Subarticle 710-10(B) will be paid for the lot represented.

When the measurement of any core is less than the plan thickness by more than 1.0", the actual thickness of the pavement in this area will be determined by taking additional cores at not less than 10 foot intervals parallel to the center line in each direction from the affected location until in each direction a core is found which is not deficient by more than 1.0 inch. Exploratory cores for deficient thickness will not be used in averages for adjusted unit price. Patch all core holes within 72 hours of taking the core, using a Department approved nonshrink grout compatible with the pavement concrete. Areas found deficient in thickness by more than 1.0" will be removed full lane width and replaced with concrete of the thickness shown on the plans. Any full width repairs to the concrete pavement must be performed in accordance with the *North Carolina Department of Transportation PCCP Repair Manual* and not be less than 1/2 of the panel length (7.5 feet).

Page 7-17, Article 710-10 (C), Measurement and Payment, Substitute the following equation for the pay factor calculation:

Pay Factor (%) = 100 – [650 – PSI]
(pay factor rounded to nearest tenth of one percent)

SECTION 725
FIELD LABORATORY FOR PORTLAND CEMENT CONCRETE PAVEMENT

Page 7-21, Article 725-2, General Requirements, replace with the following:

Furnish and maintain for the exclusive use of the Engineer a field office and laboratory in which to house and use all testing equipment needed. Provide a field office that is dust and water tight, floored, and has an adequate foundation so as to prevent excessive floor movement. Provide a field office that contains 6 or more 110 volt electrical double outlets properly grounded and spaced; a telephone; at least 2 windows, satisfactory locks on all doors and windows; adequate lighting, heating, and air conditioning; sink; running water to sink; and satisfactory exhaust fan. Provide a field office that meets the following approximate minimum requirements: 200 square feet of floor space; 10 feet interior width; 6 feet 6 inches interior height; 20 square feet of counter space, 2.5 to 3 feet high and 2 feet deep with cabinets or drawers below the counter top; and 6 square feet of desk space not enclosed with cabinets. Locate the office in a position that will permit full view of the plant from the interior of the office. At or near the office, furnish toilet facilities, with waste disposal, available for use of the Department personnel. Maintain these toilets in a neat and clean condition.

Provide a laboratory trailer adjacent to the field office that is at least 400 square feet in area, approximately 20 feet wide, 20 feet long, and 7 feet in height. Provide a laboratory trailer that contains 6 or more 110 volt electrical double outlets properly grounded and spaced; satisfactory locks on all doors and windows; adequate lighting, heating, and air conditioning; sink; running

water to sink; and satisfactory exhaust fans. Provide two workbenches that are approximately 10 feet long, 2 feet wide, and 2.5 feet high. One workbench shall be installed inside the trailer and the other across the end of the trailer. Provide a shelter or roof over the outside workbench to provide protection from weather. Provide, in the laboratory, an adequate number of water storage tanks to hold all acceptance beams and any additional beams made for the purpose of determining early strengths. Construct the water storage tanks of non-corroding materials and have requirements for automatic control of the water temperature. Maintain the water in the tank at a temperature of 73°F ±3°F. Equip each tank with a recording thermometer with its bulb located in the water. Provide sufficient tank volume to maintain all beams, stored with the long axis vertical, in a fully submerged condition for the duration of the required curing period. Furnish a wooden mixing board at least 3/4 inch thick and approximately 4 feet wide and 4 feet long, that is covered on one side with sheet metal of at least 22 gage, at the shelter. Provide facilities to maintain the test beams at temperature between 60°F and 80°F during initial curing.

SECTION 1000
PORTLAND CEMENT CONCRETE PRODUCTION AND DELIVERY

Page 10-2, Subarticle 1000-3(A), Composition and Design, insert the following:

Establish and submit for approval process controls for the aggregate stockpiles and the plant operations to ensure the concrete is consistently produced in accordance with the approved Shilstone mix design.

Diamond Grinding Concrete Pavement

The operations detailed in this special provision will take effect if the design build team elects to diamond grind the completed concrete pavement surface of the entire project or is required to diamond grind the entire project due to excessive grinding to achieve a satisfactory profile index in accordance with the provisions of the final surface testing.

Description.

Perform the work covered by this provision including but not limited to diamond grinding and regrinding concrete pavement to meet final surface testing requirements, evaluating existing concrete pavement and aggregate properties, selecting diamond tipped saw blades and configuration of cutting head; continual removal of residual slurry from pavement and disposal; providing necessary traffic control; furnishing all labor, materials, supplies, tools, equipment and incidentals as necessary.

Equipment.

Use equipment with diamond tipped saw blades gang mounted on a power driven self propelled machine with a minimum wheel base length of 15 feet (4.6 meter) that is specifically designed to smooth and texture portland cement concrete pavement. Utilize equipment that does not cause ravels; aggregate fracture; spalls or disturbance to the longitudinal or transverse joints; or damage and/or strain to the underlying surface of the pavement. Should any of the above problems occur immediately suspend operations.

Provide a minimum 3 feet (1 meter) wide grinding head with 50 (164) to 60 (200) evenly spaced grooves per foot (meter). Prior to designing the grinding head, evaluate the aggregate hardness of the concrete pavement and select the appropriate diamond size, diamond concentration and bond hardness for the individual saw blades.

Provide vacuuming equipment to continuously remove slurry residue and excess water from the pavement as part of the grinding operation. Transport slurry material and properly dispose of this material. . Do not allow the slurry material to flow into a travel lane occupied by traffic or into any drainage facility.

Construction.

Grind the pavement surface to a uniform appearance with a high skid resistant longitudinal corduroy type texture. Provide grooves between 0.09 (2.28mm) and 0.15 (3.81mm) inches wide with the land area between the grooves between 0.06 (1.52mm) and 0.13 (3.30mm) inches wide. Ensure a ridge peak of approximately 0.0625 inches (1.59mm) higher than the bottom of the grooves.

Begin and end diamond grinding at lines normal to the pavement centerline. Grind only in the longitudinal direction. All grooves and adjacent passes shall be parallel to each other with no variation. Completely lap adjacent passes with no unground surface remaining between passes and no overlap of more than 1 1/2 inches (35 mm). Adjacent passes shall be within 1/8 inch (10mm) of the same height as measured with a 3 foot (0.914meter) straightedge. Maintain positive cross-slope drainage for the duration of the grinding operation.

Grind all travel lanes to include auxiliary lanes, ramps and loops with not less than 98 percent of the specified surface being textured by grinding. Grinding of the bridge decks and concrete shoulders will not be required. Remove a minimum 0.0625 inches at all locations except dips. Extra grinding to eliminate minor depressions is not required. There shall be no ridge between lanes. In a separate operation, transition the grinding of any remaining ridges greater than 1/8 inch (10 mm) in height on the outside edge next to the shoulder or at a tie to an existing facility to the satisfaction of the Engineer.

FENCE:

(3-6-06) DB8 R86

Revise the *2006 Standard Specifications* as follows:

Page 8-54, Subarticle 866-3(A), second sentence,

Add *existing fencing* after stumps

STREET SIGNS AND MARKERS AND ROUTE MARKERS

(7-1-95) DB9 R01

Move any existing street signs, markers, and route markers out of the construction limits of the project and install the street signs and markers and route markers so that they will be visible to the traveling public if there is sufficient right-of-way for these signs and markers outside of the construction limits.

Near the completion of the project and when so directed by the Engineer, move the signs and markers and install them in their proper location in regard to the finished pavement of the project.

Stockpile any signs or markers that cannot be relocated due to lack of right of way, or any signs and markers that will no longer be applicable after the construction of the project, at locations directed by the Engineer for removal by others.

The Design Builder will be responsible to the owners for any damage to any street signs and markers or route markers during the above described operations.

CABLE GUIDERAIL:

(12-19-06) (Revised 11-29-07) DB8 R69

Revise the *2006 Standard Specifications* as follows:

Page 8-51, Article 865-1 Description, add the following as the second sentence of the first paragraph:

> Install additional double faced cable guiderail posts without cable at median hazards as shown in Roadway Standard Drawing No. 865.01 (Sheet 1 of 12)

Page 8-52, Article 865-2 Materials, add the following as the last paragraph:

Additional guiderail posts shall be double faced guiderail intermediate posts.

STEEL U-CHANNEL POSTS:

(7-18-06) DB9 R02

Amend the *2006 Standard Specifications* as follows:

Page 9-15 Subarticle 903-3(D) first paragraph, last sentence, delete the last sentence and add the following:

Use posts of sufficient length to permit the appropriate sign mounting height. Spliced posts are not permitted on new construction.

SHIPPING SIGNS:

5-15-07 DB9 R03

Revise the 2006 *Standard Specifications* as follows:

Page 9-2, Section 901-3(A), General, add the following as the 7th paragraph:

Ship all multi-panel signs to the project intact, completely assembled and ready to be hung. Fabricate signs taller than 12 ft as 2 separate signs with a horizontal splice, ready to be spliced and hung. No assembly other than a horizontal splice will be permitted.

AGGREGATE PRODUCTION

(11-20-01) DB10 R05

Provide aggregate from a producer who utilizes the new Aggregate Quality Control/Quality Assurance Program that is in effect at the time of shipment.

No price adjustment is allowed to Design-Build Team or producers who utilize the new program. Participation in the new program does not relieve the producer of the responsibility of complying with all requirements of the *2006 Standard Specifications*. Copies of this procedure are available upon request from the Materials and Test Unit.

CONCRETE BRICK AND BLOCK PRODUCTION

(11-20-01) DB10 R10

Provide concrete brick and block from a producer who utilizes the new Solid Concrete Masonry Brick / Unit Quality Control / Quality Assurance Program that is in effect on the date that material is received on the project.

No price adjustment is allowed to Design-Build Team or producers who utilize the new program. Participation in the new program does not relieve the producer of the responsibility of complying with all requirements of the *2006 Standard Specifications*. Copies of this procedure are available upon request from the Materials and Test Unit.

PAINT SAMPLING AND TESTING:

(8-15-06) DB10 R 45

Revise the *2006 Standard Specifications* as follows:

Page 10-190, Article 1080-4, Delete the first paragraph and replace with the following:

All paint will be sampled, either at the point of manufacture or at the point of destination. Inspection and sampling will be performed at the point of manufacture wherever possible. The Design-Build Team shall not begin painting until the analysis of the paint has been performed, and the paint has been accepted.

GLASS BEADS

(7-18-06) DB10 R35

Revise the *2006 Standard Specifications* as follows:

Page 10-223, 1087-4(C) Gradation & Roundness

Replace the second sentence of the first paragraph with the following:

All Drop-On and Intermixed Glass Beads shall be tested in accordance with ASTM D1155.

Delete the last paragraph.

CHANGEABLE MESSAGE SIGNS

(11-21-06) DB11 R 11

Revise the *2006 Standard Specifications* as follows:

Page 11-9, Article 1120-3, Replace the 3rd sentence with the following:

Sign operator will adjust flash rate so that no more than two messages will be displayed and be legible to a driver when approaching the sign at the posted speed.

ENGINEERING FABRICS TABLE 1056-1

(7-18-06) DB10 R40

Revise the *2006 Standard Specifications* as follows:

Page 10-100, Table 1056-1, replace the values for Trapezoidal Tear Strength with the following:

Physical Property	ASTM Test Method	Type 1	Type 2	Type 3		Type 4
				Class A	Class B	
Typical Applications		Shoulder Drain	Under Riprap	Temporary Silt Fence		Soil Stabilization
Trapezoidal Tear Strength	D4533	*45* lb	*75* lb	--	--	*75* lb

PORTABLE CONCRETE BARRIER

(2-20-07) DB10 R50

The *2006 Standard Specifications* is revised as follows:

Page 10-245, Article 1090-1(A) General, add the following after the first sentence:

The requirement for approved galvanized connectors will be waived if the barrier remains the property of the Design-Build Team.

PORTLAND CEMENT CONCRETE (Alkali-Silica Reaction):

2-20-07 DB10 R16

Revise the *2006 Standard Specifications* as follows:

Article 1024-1(A), replace the 2nd paragraph with the following:

Certain combinations of cement and aggregate exhibit an adverse alkali-silica reaction. The alkalinity of any cement, expressed as sodium-oxide equivalent, shall not exceed 1.0 percent. For mix designs that contain non-reactive aggregates and cement with an alkali content less than 0.6%, straight cement or a combination of cement and fly ash, cement and ground granulated blast furnace slag or cement and microsilica may be used. The pozzolan quantity shall not

exceed the amount shown in Table 1024-1. For mixes that contain cement with an alkali content between 0.6% and 1.0%, and for mixes that contain a reactive aggregate documented by the Department, regardless of the alkali content of the cement, use a pozzolan in the amount shown in Table 1024-1.

Obtain the list of reactive aggregates documented by the Department at:

http://www.ncdot.org/doh/operations/materials/pdf/quarryasrprob.pdf

Table 1024-1	
Pozzolans for Use in Portland Cement Concrete	
Pozzolan	*Rate*
Class F Fly Ash	20% by weight of required cement content, with 1.2 lbs Class F fly ash per lb of cement replaced
Ground Granulated Blast Furnace Slag	35%-50% by weight of required cement content with 1 lb slag per lb of cement replaced
Microsilica	4%-8% by weight of required cement content, with 1 lb microsilica per lb of cement replaced

TEMPORARY SHORING:

(09/25/07) DB11 R02

Description

Design and construct temporary shoring in accordance with the contract. Temporary shoring includes standard shoring, temporary mechanically stabilized earth (MSE) walls and non-anchored temporary shoring. Trench boxes are not considered temporary shoring. "Standard shoring" refers to *standard temporary shoring* and *standard temporary MSE walls*. Notes on plans may restrict the use of one or both types of standard shoring. Notes on plans may also require or prohibit temporary MSE walls.

Unless noted otherwise on the plans, temporary shoring is required as shown on the plans and to maintain traffic. Temporary shoring to maintain traffic is defined as shoring necessary to provide lateral support to the side of an excavation or embankment parallel to an open travelway when a theoretical 2:1 (H:V) slope from the bottom of the excavation or embankment intersects the existing ground line closer than 5 ft from the edge of pavement of the open travelway.

This provision is not applicable to anchored temporary shoring or the installation of pipes, drop inlets and utilities unless noted otherwise on the plans. Provide all shoring submittals before beginning work.

Materials

(A) Certifications, Storage and Handling

Provide Type 7 Contractor's Certifications in accordance with Article 106-3 of the *2006 Standard Specifications* for all shoring materials used with the exception of reinforcing fabrics and geogrids. Furnish Type 2 Typical Certified Mill Test Reports in accordance with Article 106-3 of the *2006 Standard Specifications* for all seam strengths and reinforcing fabric and geogrid properties. Provide minimum average roll values (MARV) in accordance with ASTM D4759 for test reports. For testing reinforcing fabric and geogrids, a lot is defined as a single day's production.

Load, transport, unload and store shoring materials such that they are kept clean and free of damage. Identify, store and handle all geogrids and geotextile fabrics in accordance with ASTM D4873. Geogrids and fabrics with defects, flaws, deterioration or damage will be rejected. Do not leave fabrics or geogrids uncovered for more than 7 days.

(B) Shoring Backfill

Use shoring backfill for the construction of all temporary shoring including backfilling behind non-anchored temporary shoring and in the reinforced zone for temporary MSE walls. Unless backfilling around culverts, use shoring backfill that meets the requirements of Class II Type I, Class III, Class V or Class VI select material in accordance with Section 1016 of the *2006 Standard Specifications* or AASHTO M145 for soil classification A-2-4 with a maximum plasticity index (PI) of 6. For backfilling around culverts, use shoring backfill as defined herein except for A-2-4 soil.

(C) Non-anchored Temporary Shoring

Use steel shapes, plates and piles that meet the requirements of ASTM A36 and steel sheet piles that meet the requirements of Article 1084-2 of the *2006 Standard Specifications*. Use timber lagging with a minimum allowable bending stress of 1000 psi that meets the requirements of Article 1082-1 of the *2006 Standard Specifications*. For standard temporary shoring, use pile sections and lengths and lagging sizes as shown on the plans.

(D) Temporary MSE Walls

Use welded wire reinforcement forms, facings, mesh and mats that meet the requirements of AASHTO M55 or M221. Use connector bars and wires for welded wire wall components and support struts that meet the requirements of AASHTO M32. For standard temporary MSE walls, use wire gauges, strut sizes and welded wire components as shown on the plans.

(1) Geotextile Fabrics

Use geotextile fabrics that meet the requirements of Article 1056-1 of the *2006 Standard Specifications*.

(a) Reinforcing Fabric

The reinforcement direction (RD) is defined as the direction perpendicular to the wall face and the cross-reinforcement direction (CRD) is defined as the direction parallel to the wall face.

Use woven polyester or polypropylene fabric that meets the following properties:

Property	Test Method	Requirement (MARV)
Wide Width Tensile Strength @ Ultimate (RD)	ASTM D4595	Varies – 200 lb/in min
Wide Width Tensile Strength @ Ultimate (CRD)	ASTM D4595	100 lb/in min
Trapezoidal Tear Strength	ASTM D4533	100 lb min
CBR Puncture Strength	ASTM D6241	600 lb min
UV Resistance after 500 hrs	ASTM D4355	70 %
Apparent Opening Size (AOS), US Sieve	ASTM D4751	20 min – 70 max
Permittivity	ASTM D4491	0.20 sec^{-1}

For standard temporary MSE walls (temporary fabric wall) use reinforcing fabric wide width tensile strengths and lengths in the RD as shown on the plans.

(b) Retention Fabric

Retain shoring backfill at the face of temporary MSE walls with retention fabric. Use fabric that meets the requirements of Class 3 and the UV resistance, AOS and permittivity for separation geotextile in accordance with AASHTO M288.

(2) SierraScape Temporary Wall

Use uniaxial (UX) geogrids composed of high-density polyethylene (HDPE) manufactured by Tensar Earth Technologies. Test geogrids in accordance with ASTM D6637. Use connection rods manufactured by Tensar Earth Technologies to transfer the load between the facings and geogrids.

For standard temporary MSE walls (SierraScape temporary wall) use geogrid types and lengths as shown on the plans.

(3) Terratrel Temporary Wall

Use ribbed reinforcing steel strips manufactured by The Reinforced Earth Company that meet the requirements of ASTM A572, Grade 65. Use connector rods that meet the requirements of AASHTO M31, Grade 60 and hair pin connectors that meet the requirements of ASTM A1011, Grade 50. Use bolts, nuts and washers that meet the requirements of AASHTO M164.

For standard temporary MSE walls (Terratrel temporary wall) use ribbed steel strip size and lengths, rod lengths and diameters, hairpin connectors, bolts, nuts and washers as shown on the plans.

Embedment

"Embedment" is defined as the depth of shoring below the bottom of the excavation or the grade in front of the shoring. For cantilever shoring, embedment is the depth of the piling below the grade in front of the shoring. For temporary MSE walls, embedment is the difference between the grade elevation in front of the wall and the elevation of the bottom of the reinforced zone.

Portable Concrete Barriers

Provide portable concrete barriers in accordance with the plans and if shoring is located within the clear zone as defined in the *AASHTO Roadside Design Guide*. Use NCDOT portable concrete barriers (PCBs) in accordance with Roadway Standard Drawing No. 1170.01 and Section 1170 of the *2006 Standard Specifications*. Use Oregon Tall F-Shape Concrete Barriers in accordance with detail drawing and special provision obtained from:

http://www.ncdot.org/doh/preconstruct/wztc/DesRes/English/DesResEng.html

The clear distance is defined as the horizontal distance from the back face of the barrier to the edge of pavement and the minimum required clear distance is shown on the traffic control plans. At the Contractor's option or if the minimum required clear distance is not available, set an unanchored PCB against the traffic side of the shoring and design shoring for traffic impact or use the "surcharge case with traffic impact" for the standard temporary shoring. An anchored PCB or Oregon barrier is required for barriers above and behind temporary MSE walls.

Contractor Designed Shoring

"Contractor designed shoring" is defined as non-anchored temporary shoring or temporary MSE walls designed by the Contractor. Unless prohibited or required, Contractor designed shoring is optional. Contractor designed shoring is required when notes on plans prohibit the use of standard shoring. Non-anchored Contractor designed shoring is prohibited when notes on plans require the use of temporary MSE walls and Contractor designed temporary MSE walls are prohibited when notes on plans prohibit the use of temporary MSE walls.

Before beginning design, survey the shoring location to determine existing elevations and actual design heights. Submit design calculations and drawings including typical sections for review and acceptance showing details of the proposed design and construction sequence in accordance with Article 105-2 of the *2006 Standard Specifications*. Have shoring designed, detailed and sealed by a Professional Engineer registered in the State of North Carolina. Submit 3 hard copies of design calculations and 10 hard copies of drawings and an electronic copy (pdf or jpeg format on CD or DVD) of both the calculations and drawings.

Design non-anchored temporary shoring in accordance with the *AASHTO Guide Design Specifications for Bridge Temporary Works* and temporary MSE walls in accordance with the *AASHTO Allowable Stress Design 2006 Standard Specifications for Highway Bridges*. Use the following soil parameters for shoring backfill in the reinforced zone.

Total Unit Weight = 120 pcf
Friction Angle = 30 degrees
Cohesion = 0 psf

Design temporary shoring in accordance with the in-situ assumed soil parameters shown on the plans. Design shoring for a 3-year design service life and a traffic surcharge equal to 240 psf. This surcharge is not applicable for construction traffic. If a construction surcharge will be present within a horizontal distance equal to the height of the shoring, design the shoring for the required construction surcharge. If the edge of pavement or a structure to be protected is within a horizontal distance equal to the height of the shoring, design shoring for a maximum deflection of 3". Otherwise, design shoring for a maximum deflection of 6".

For non-anchored temporary shoring, the top of shoring elevation is defined as the elevation where the grade intersects the back face of the shoring. For traffic impact, apply 2 kips/ft to the shoring 1.5 ft above the top of shoring elevation. When designing for traffic impact, extend shoring at least 32" above the top of shoring elevation. Otherwise, extend shoring at least 6" above the top of shoring elevation.

Standard Shoring

Unless notes on plans prohibit the use of one or both types of standard shoring, standard shoring is optional. Submit a "Standard Temporary MSE Wall Selection Form" for each standard temporary MSE wall location and a "Standard Temporary Shoring Selection Form" for up to three standard temporary shoring locations. Submit selection forms at least 14 days before beginning shoring construction. Obtain standard shoring selection forms from:

http://www.ncdot.org/doh/preconstruct/highway/geotech/formdet/standards.html

(A) Standard Temporary Shoring

Determine the shoring height, traffic impact, groundwater condition and slope or surcharge case for each standard temporary shoring location. Determine the minimum required extension, embedment and sheet pile section modulus or H pile section from the plans for each location.

(B) Standard Temporary MSE Walls

Choose a standard temporary MSE wall from the multiple temporary MSE wall options shown in the plans. Do not use more than one option per wall location.

Step bottom of reinforced zone in increments equal to vertical reinforcement spacing for the wall option chosen. Determine the wall height and slope or surcharge case for each section of standard temporary MSE wall. With the exception of either the first or last section of wall, use horizontal section lengths in increments equal to the following for the wall option chosen.

Standard Temporary MSE Wall Option	Increment
Temporary Fabric Wall	9 ft min (varies)
Hilfiker Temporary Wall	10 ft min (varies)
SierraScape Temporary Wall	18 ft – 7 ¼ in
Retained Earth Temporary Wall	24 ft
Terratrel Temporary Wall	19 ft – 8 in

Determine the appropriate facings and/or forms and reinforcement length, spacing, strength, type, density and/or size from the plans for each wall section.

Construction Methods

When using an anchored PCB, anchor the barrier in accordance with Roadway Standard Drawing 1170.01 and Section 1170 of the *2006 Standard Specifications*. Control drainage during construction in the vicinity of temporary shoring. Collect and direct run off away from temporary MSE walls, shoring and shoring backfill.

(A) Non-anchored Temporary Shoring

Install and interlock sheet piling or install piles as shown on the plans or accepted submittals with a tolerance of 1/2 inch per foot from vertical. Contact the Engineer if the design embedment is not achieved. If piles are placed in drilled holes, perform pile excavation to the required elevations and backfill excavations with concrete and lean sand grout.

Remove grout as necessary to install timber lagging. Install timber lagging with a minimum bearing distance of 3” on each pile flange. Backfill voids behind lagging with shoring backfill.

Perform welding in accordance with the accepted submittals and Article 1072-20 of the *2006 Standard Specifications*.

(1) Pile Excavation

Excavate a hole with a diameter that will result in at least 3” of clearance around the entire pile. Use equipment of adequate capacity and capable of drilling through soil and non-soil including rock, boulders, debris, man-made objects and any other materials encountered. Blasting is not permitted to advance excavations. Blasting for core removal is permitted only when approved by the Engineer. Dispose of drilling spoils in accordance with Section 802 of the *2006 Standard Specifications*. Drilling spoils consist of all excavated material including water removed from excavations by either pumping or drilling tools.

If unstable, caving or sloughing soils are encountered, stabilize excavations with clean watertight steel casing. Steel casings may be either sectional type or one continuous corrugated or non-corrugated piece. Provide casings of ample strength to withstand handling and driving stresses and the pressures imposed by concrete, earth or backfill. Use steel casings with an outside diameter equal to the hole size and a minimum wall thickness of 1/4 inch.

Before placing concrete, check the water inflow rate in the excavation after any pumps have been removed. If the inflow rate is less than 6” per half hour, remove any water and free fall the concrete into the excavation. Ensure that concrete flows completely around the pile. If the water inflow rate is greater than 6” per half hour, propose and obtain approval of the concrete placement procedure before placing concrete.

Center the pile in the excavation and fill the excavation with Class A concrete in accordance with Section 1000 of the *2006 Standard Specifications* except as modified herein. Provide concrete with a slump of 6 to 8 inches. Use an approved high-range water reducer to achieve this slump. Place concrete in a continuous manner to the bottom of shoring or the elevations shown on the accepted submittals. Fill the remainder of the excavation with a lean sand grout and remove all casings.

(B) Temporary MSE Walls

The Engineer may require a wall preconstruction meeting to discuss the construction and inspection of the temporary MSE walls. If required, conduct the meeting with the Site Superintendent, the Resident or Bridge Maintenance Engineer, the Bridge Construction Engineer and the Geotechnical Operations Engineer before beginning wall construction.

Perform all necessary clearing and grubbing in accordance with Section 200 of the *2006 2006 Standard Specifications*. Excavate as necessary as shown on the plans or accepted submittals. Notify the Engineer when foundation excavation is complete. Do not place shoring backfill or first reinforcement layer until obtaining approval of the excavation depth and foundation material.

If applicable, install foundations located within the reinforced zone in accordance with the plans or accepted submittals.

Erect and maintain facings and forms as shown on the plans or accepted submittals. Stagger vertical joints of facings and forms to create a running bond when possible unless shown otherwise on the plans or accepted submittals.

Place facings and forms as near to vertical as possible with no negative batter. Construct temporary MSE walls with a vertical and horizontal tolerance of 3” when measured with a 10 ft straight edge and an overall vertical plumbness (batter) and horizontal alignment of less than 6”.

Place reinforcement at locations and elevations shown on the plans or accepted submittals and in slight tension free of kinks, folds, wrinkles or creases. Repair or replace any damaged reinforcement. Contact the Engineer when existing or future structures such as foundations, pavements, pipes, inlets or utilities will interfere with reinforcement. To avoid structures, deflect, skew and modify reinforcement.

Do not splice reinforcement in the reinforcement direction (RD), i.e., parallel to the wall face. Seams are allowed in the cross-reinforcement direction (CRD). Bond or sew adjacent reinforcing fabric together or overlap fabric a minimum of 18” with seams oriented perpendicular to the wall face.

Place shoring backfill in 8 to 10 inch thick lifts and compact in accordance with Subarticle 235-4(C) of the *2006 Standard Specifications*. Use only hand operated compaction equipment within 3 ft of the wall face. Do not damage reinforcement when placing and compacting shoring backfill. End dumping directly on the reinforcement is not permitted. Do not operate heavy equipment on reinforcement until it is covered with at least 10” of shoring backfill. Do not use sheepsfoot, grid rollers or other types of compaction equipment with feet.

Cover reinforcing and retention fabric with at least 3” of shoring backfill. Place top reinforcement layer between 4 and 24 inches below top of wall as shown on the plans or accepted submittals.

Bench temporary MSE walls into the sides of excavations where applicable. If the top of wall is within 5 ft of finished grade, remove top form or facing and incorporate the top reinforcement layer into the fill when placing fill in front of the wall. Temporary MSE walls remain in place permanently unless required otherwise.

PAVEMENT MARKING LINES:
(11-21-06) (Rev. 9-18-07) DB 12 R001

Revise the *2006 Standard Specifications* as follows:

Page 12-2, 1205-3(D) Time Limitations for Replacement, add the following at the beginning of the chart:

Facility Type	Marking Type	Replacement Deadline
Full-control-of-access multi-lane roadway (4 or more total lanes) and ramps, including Interstates	All markings including symbols	By the end of each workday's operation if the lane is opened to traffic

INTERNATIONAL ROUGHNESS INDICATOR (IRI)

Description

The NCTA will measure and evaluate, for acceptance purposes, the ride quality of the final surface of Hot Mix Asphalt or Portland Cement Concrete Pavements. The Engineer will determine the ride quality incentive associated with the final surface profile.

Equipment

The NCTA shall provide a certified high-speed or lightweight inertial profiler conforming to AASHTO PP 50.

Work Methods

The Engineer will measure and evaluate profiles on surfaces as described below unless otherwise shown on the plans.

Surface Test Type A – Test the surface longitudinally as specified with an approved straightedge at locations selected by the NCTA and meets the following criteria:

- Less than 45 mph

Surface Test Type B – Test the surface longitudinally as specified with an approved inertial profiling system at locations selected by the NCTA and meets the following criteria:

- Multi-Lane facility 45 mph or greater or,
- Any facility 55 mph or greater, and
    - Minimum 1 mile in length.

- Minimum 2 courses of asphalt of uniform thickness or more than 3 inches of concrete

Quality Control (QC) Testing – Perform QC tests on a daily basis throughout the duration of the project. Use an approved straightedge, inertial profiler, profilograph, or any other appropriate means to perform QC tests. The Contractor is responsible for process control and changes in operation to meet the specifications. The NCTA will not assist with QC testing.

Final Surface Testing – Upon completion, the Engineer will determine the ride quality of the final pavement surface. Pavement profile shall be measured in both wheel paths simultaneously, parallel to the right edge of the lane, and in the direction of travel for each lane. The Engineer will take profiles over the entire length of final surface travel lane pavement exclusive of - Y - line travel lanes less than or equal to 300 feet in length, turn lanes less than or equal to 300 feet in length, structures, approach slabs, paved shoulders, loops, and tapers or other irregular shaped areas of pavement, unless otherwise approved by the Engineer. The Engineer will test in accordance with this provision all mainline travel lanes, full width acceleration or deceleration lanes, and collector lanes meeting criteria detailed in Section 3.1.

Lot Size – A full lot is 0.1 mile (528ft) of a single pavement lane. Lots will be designated as starting 25 feet after the beginning limit of paving and continue to the 25 feet before the ending limit of paving for each travel lane. For any lot, which is less than 0.1 mile in length, the applicable pay adjustment incentive will be prorated on the basis of the actual lot length.

Evaluation of Profiles

The NCTA will utilize the ProVAL software to import, display, and analyze the pavement profiles for acceptance purposes.

Corrective Action

Correct any 0.1-mile section of asphalt concrete pavement having an average IRI of over 75.0 in./mi., or any 0.1-mile section of Portland Cement Concrete Pavement having an average IRI of over 85.0 in./mi. After making corrections, the Contractor shall notify the NCTA to re-profile the pavement lot to verify that corrections have produced the required improvements. If the corrective action does not produce the required improvement, the NCTA may assess a penalty, or require additional corrective action. If 40% of pavement requires corrective action, then perform corrective action over the entire section. Corrective actions will not be allowed on non-deficient sections to obtain bonus payments, unless action is taken to entire facility.

Areas of localized roughness shall be identified through a 25-ft moving average filter. ProVAL will average each elevation point from the two longitudinal profiles from a travel lane to produce a single averaged wheel path. The average wheel path profiles will then be placed through a 25-foot moving average filter. The difference between the averaged wheel path and the 25-foot moving average filter for every profile point is determined. Deviations greater than 0.15 in. are considered a detected area of localized roughness. The NCTA will either assess a predetermined penalty per occurrence of localized roughness or require that corrective action be taken. If corrective action is required, notify the NCTA when the corrections have been made. The NCTA will re-profile the corrected area to ensure that the corrective action was successful. If

the corrective action is not successful, the NCTA will assess the predetermined penalty, or require additional corrective action.

ROLLER COMPACTED CONCRETE
(01-07-08)

Description

Perform the work covered by this section including but not limited to the construction of Roller Compacted Concrete (RCC) pavement on a prepared base, in accordance with these project special provisions and with lines, grades, thickness, and typical sections as shown on the plans or as directed; the designing of the mix; furnishing and placing of the concrete; furnishing of all admixtures and additives; constructing joints; furnishing joint materials; curing the pavement and furnishing all curing materials; furnishing concrete necessary for making compressive cylinders; coring and patching of the pavement; calibrating and checking the operation of batching equipment; taking actions necessary to prevent or to repair cracking; removing and replacing defective pavement.

Prior to placing RCC pavement, submit for approval a paving procedure plan describing the controls for the paving operation, paving widths, planned longitudinal and transverse joints, curing methods and patterns and description of all equipment.

Materials

(A) General

All materials to be used for RCC pavement construction shall be approved by the Engineer based on laboratory tests or certifications of representative materials and tested by the Materials and Tests Unit personnel that will be used in the actual construction.

Item:	Section:
Portland Cement Concrete	1000
Curing Agents	1026
Joint filler	1028-1
Low modulus Silicone Sealant	1028-4
Water	1024-4

(B) Aggregates

Unless otherwise approved in writing by the Engineer, furnish quality aggregates conforming to Section 1014 of the Standard Specifications. The plasticity index of the aggregate shall not exceed five. Provide a well-graded aggregate blend conforming to the following gradation:

Sieve Size	% Passing by Weight
1”	100
¾”	90-100
½”	70-100
⅜”	60-85
No. 4	40-60
No. 16	20-40
No. 100	6 -18
No. 200	2 - 8

Equipment

(A) General

Provide equipment and tools to construct RCC that will produce a completed pavement meeting the requirements for mixing, transporting, placing, compacting, finishing, and curing as provided in this provision. All equipment will be on hand and approved by the Engineer before work can proceed.

Before start-up, the Contractor’s equipment shall be carefully inspected. Should any of the equipment fail to operate properly, no work shall proceed until the deficiencies are corrected.

(B) Concrete Mixing Plants

Use batch plants or central mix plants that meet the requirements of Section 1000. Produce an RCC pavement mixture in the proportions defined by the approved mix design and within the specified tolerances.

(1) Mixing Plant

Locate the RCC mixing plant within a 30 minute haul time from the RCC placement location. With prior testing and the Engineer’s approval, a set-retarding admixture may be used to expand the haul time.

Provide a RCC mixing plant capable of producing a concrete mixture in the proportions defined by the approved mix design and within the tolerances listed below:

Material	Variation by Weight
Cementitous Materials	±2.0%
Water	±3.0%
Aggregates	±4.0%

The capacity of the mixing plant shall be sufficient to produce a uniform mixture at a rate compatible with the placement equipment. Because of the very dry consistency of RCC, the batch volume of mixed material especially for drum mixers may need to be less than the manufacturer’s rated capacity of the mixer for convention concrete mixtures.

(2) Pugmill Plants

A pugmill plant shall be a central plant with a twin shaft pugmill mixer, capable of batch and continuos mixing, equipped with synchronized metering devices and feeders to maintain the correct proportions of aggregate, cement, mineral admixtures, and water. Other pugmill plant requirements are as follows:

If previously blended aggregate is furnished, storage may be a stockpile from which it is fed directly to a conveyor feeding the mixer. If aggregate is furnished in two or more size groups, aggregate separation must be provided between the separate stockpiles.

Control feed rate by a variable speed belt or an operable gate calibrated to accurately deliver any specified quantity of material. If two or more aggregate stockpiles are used, the feed rate from each bin shall be readily adjustable to change aggregate proportions, when required. Feed rate controls must maintain the established proportions of aggregate from each stockpile bin when the combined aggregate delivery is increased or decreased.

Operate plant scales in accordance with Subarticle 1000-10(C) of the Standard Specifications.

Provide separate and independent storage silos for Portland cement, fly ash, and slag. Each silo must be clearly identified to avoid confusion during silo loading. If the Contractor chooses to pre-blend the cementitious material he must employ blending equipment acceptable to the Engineer and demonstrate, with a testing plan, the ability to successfully produce a uniform blended material meeting the mix design requirements. Testing of the pre-blended cementitious material shall be done on a daily basis to assure both uniformity and proper quantities.

To assure a uniform and accurate quantity of cementitious materials enters the mixer, provide a satisfactory means of dispensing Portland cement, fly ash, or slag, volumetrically or by weight.

Measure the required amount of water for the approved mix by weight or volume. Equip the unit with an accurate metering device. Control the water flow by a meter, valve or other approved regulating device(s) to maintain the optimum moisture content in the mixture.

After the pugmill or plant has processed the material, store it in a holding bin with a minimum capacity of 3 tons before discharging into trucks to minimize segregation. Hold the material in the holding bin for loading purposes only and do not store for loading subsequent trucks. Loading trucks directly from a belt or auger box will not be permitted.

(3) Rotary Drum Plant

Provide a rotary drum batch mixer capable of producing a homogeneous mixture, uniform in color and having all coarse aggregate coated with cementitious paste. Equip the mixer with batching controls that measure the amounts of cement, mineral admixture and aggregate entering into each batch of RCC by direct weighing equipment. The weighing equipment shall be readily adjustable to compensate for the moisture content of the aggregate or for changing the proportionate batch weights, and shall include a visible dial or equally suitable device which will accurately register the scale load from zero to full capacity. The cement and mineral admixture

may be weighed separately or cumulatively in the same hopper on the same scale, provided the cement is weighed first.

Equip the bulk cement and mineral admixture weigh hoppers with vibrators to operate automatically and continuously while weighing hoppers are being dumped. The weigh hopper shall have sufficient capacity to hold not less than 10 percent in excess of the cementitious material required for one batch.

Measure the amount of water entering each batch of RCC by weight or volume. Provide equipment capable of measuring the water to within a tolerance of plus or minus one percent and equipped with an accurate gauge or dial measuring device. During batching, water shall be admitted to the mixer only through the water measuring device and then only at time of charging.

Provide drum mixers equipped with an accurate clock or timing device, capable of being locked, for visibly indicating the time of mixing after all the materials, including the water, are in the mixer.

Other types of batching and mixing equipment and configurations including dry batch plants and concrete truck mixers may be used with the approval of the Engineer. The Contractor must demonstrate that the mixing equipment has the ability to produce a consistent, well-blended, non-segregated RCC mix satisfying the minimum mixing plant capacity requirements of Article 1000-10 and within the tolerance limits as specified.

(B) Paver

Place RCC with an asphalt paver, with devices capable of production a RCC pavement with a minimum of 90% of the maximum wet density in accordance with ASTM D 1557 or equivalent test method.

Provide a paver of suitable weight and stability to spread and finish the RCC material, without segregation, to the required thickness, smoothness, surface texture, cross-section and grade. Obtain approval of equipment from the Engineer prior to use.

(C) Compactors

Provide self-propelled steel drum vibratory rollers having a minimum static weight of 10 tons for primary compaction. Provide rollers equipped with controls that automatically disengage the vibration mechanism before the roller stops when being used in a vibratory mode.

Use walk-behind vibratory rollers or plate tampers for compacting areas inaccessible to the large rollers.

(D) Water Trucks

Provide at least one water truck or other similar equipment on-site and available for use throughout the paving and curing process. Provide a water truck capable of evenly applying a fine spray of water to the surface of the RCC without damaging the final surface.

(E) Hauling Equipment

Use non-agitating hauling equipment having bodies which are smooth, watertight, metal containers with rounded internal corners equipped with vibrators and gates to discharge the concrete without segregation or damage. Provide fitted covers to protect the material from rain and excessive evaporation.

Prevent the accumulation of hardened concrete in the delivery vehicles. Discharge all flushing water before charging with the next RCC load.

PREPARATION OF SUBGRADE AND BASE

Prior to the placement of RCC pavement material, check the subgrade and base for proper density and soft or yielding areas. Correct all damaged areas in the subgrade or base prior to placing concrete. Keep the base clean and free of foreign material, ponded water, and frost prior to the placement of the RCC pavement mixture.

Dampen the surface of the base uniformly at the time the RCC pavement mixture is placed. Ensure that no free water or ponding is present at the time of concrete placement.

WEATHER LIMITATIONS

(A) Cold Weather

Do not begin paving operations or discontinue paving operations when any of the following conditions exist.

(1) RCC material shall not be placed on any surface containing frost or frozen material.
(2) When a descending air temperature in the shade and away from artificial heat reaches 35°F, stop paving.
(3) Do not resume paving until an ascending air temperature in the shade and away from artificial heat reaches 35°F.

Provide a detailed proposal for protecting the RCC pavement when the air temperature is expected to fall below 40°F. Obtain approval from the Engineer before paving operations may be resumed in cold weather.

Provide a sufficient supply of protective material such as insulating blankets, plastic sheeting, straw, burlap or other suitable material and keep a sufficient amount of these materials at the paving train. Use methods and materials such that a minimum temperature of 40°F at the pavement surface will be maintained for a minimum of five days.

Approval of the Contractor‘s proposal for frost protection shall not relieve the Contractor of the responsibility for the quality and strength of the RCC placed during cold weather. Any RCC pavement that freezes shall be removed and replaced at the Contractor’s expense.

(B) Hot Weather Precautions

Take special precautions during periods of hot weather or windy conditions to minimize moisture loss due to evaporation. Under conditions of excessive surface evaporation due to a

combination of air temperature, relative humidity, concrete temperature and wind conditions, the Contractor must present to the Engineer a detailed proposal for minimizing moisture loss and protecting the RCC. Precautions may include cooling of aggregate stockpiles by use of a water spray, protective covers on dump trucks, temporary wind breaks to reduce wind effect, cooling of concrete mix water, and decreasing the allowable time between mixing and final compaction.

(C) Rain

Do not place RCC pavement while it is raining hard enough to be detrimental to the finished product. Placement may continue during light rain or mists provided the surface of the RCC pavement is not washed-out or damaged due to tracking or pickup by dump trucks or rollers. The Engineer will be the sole judge as to when placement must be stopped due to rain.

Where operations must be completed after dark, provide acceptable artificial light in accordance with Section 1413.

CONSTRUCTION METHODS

(A) Delivery

Provide a sufficient number of trucks to ensure adequate and continuous supply of RCC material to the paver. Minimize the elapsed time to be 60 minutes or less, unless otherwise approved. The elapsed time is defined as the period from first contact between mixing water and cement until the entire operation of placing and compacting, including corrective measures if necessary, has been completed.

Deliver the concrete to the work site in a thoroughly mixed and uniform mass.

(B) Placement

Deposit the RCC material directly into the hopper of the paver or material transfer device.

If at discharge, the concrete is not thoroughly mixed and homogeneous, the hauling distance, charging sequence, size of load, mixing time or any combination thereof should be altered to meet these requirements; otherwise, utilize other equipment capable of delivering a thoroughly mixed and uniform concrete mass.

Maintain an adequate quantity of RCC material in the paver between loads. Do not allow the paver to become empty between loads. Maintain the material above the auger shaft at all times during paving.

Operate the paver in a manner that will prevent segregation and produce a smooth continuous surface without tearing, pulling or shoving. Limit the spread of the RCC to a length that can be compacted and finished within the appropriate time limit under the prevailing air temperature, wind, and climatic conditions.

Advance the paver in a steady, continuous operation with minimal starts and stops. Limit the paver speed during placement operations to ensure that minimum density requirements as specified are met and surface distress is minimized.

Provide a smooth, uniform and continuous surface of the RCC pavement once it leaves the paver without excessive tears, ridges or aggregate segregation. Broadcasting or fanning the RCC material across areas being compacted will not be permitted. Such additions of material may only be done immediately behind the paver and before any compaction has taken place. Any segregated coarse aggregate shall be removed from the surface before rolling.

If segregation occurs in the RCC during paving operations the spreading shall cease until the cause is determined and corrected. If the Engineer determines the segregation to be severe, remove and replace the segregated area at no additional cost.
Place RCC pavement in a pattern so that the curing water from the previous placements will not pose a runoff problem on the fresh RCC surface or on the subbase layer.

(C) Compaction

Immediately after the concrete has been spread, struck off with surface and edge irregularities adjusted, thoroughly and uniformly compact the pavement. Complete all compaction within 60 minutes of the start of plant mixing. The time may be increased or decreased at the discretion of the Engineer depending on use of set retarding admixtures or ambient weather conditions of temperature, wind and humidity.

Determine the sequence and number of roller passes by vibratory and non-vibratory rolling to obtain the minimum specified density and surface finish. Operate the rollers at a slow enough speed at all times to avoid displacement of the RCC pavement. Immediately correct any displacement of the surface resulting from reversing or turning action of the roller. Smooth out any uneven marks left during the vibrating rolling with static rolling or rubber tire rolling. Provide a final surface that is relatively smooth, flat, and reasonably free of tearing and cracking.

Areas inaccessible to either the paver or rollers may be placed by hand and compacted with equipment specified above. Compaction of these areas must satisfy the same minimum density requirements as specified above.

An alternate and preferred method for paving inaccessible areas is to use cast-in-place, air-entrained concrete with a minimum compressive strength of 4000 psi.

When placing two lanes beside each other, do not operate the roller within 12 inches of the edge of a freshly placed lane until the adjacent lane is placed. Once the adjacent lane is placed, roll both edges of the two lanes together within the allowable time. If a cold joint is planned or if more than 60 minutes elapses between placement of adjacent lanes, roll the complete lane and adhere to the cold joint procedures as specified below. At the Engineer's discretion, this time may be increased or decreased depending on the use of set retarding admixtures or the ambient weather conditions of temperature, wind, and humidity.

Provide additional rolling to longitudinal joints as necessary to produce the specified density for the full depth of the lift and a tight smooth transition occurs across the joint.

Construct compacted RCC pavement meeting the lift thickness indicated on the Plans. If RCC pavements are to be constructed in a thickness greater than 10 inches, use two equal lifts to establish the final thickness. The minimum lift thickness is 4 inches.

For multiple lift placement, the total pavement thickness shall be as shown on the Plans, and the Contractor shall submit his method of placement and lift thickness as part of a paving plan subject to approval by the Engineer. In multiple lift construction, the second lift must be placed within 60 minutes of the completion of the first lift. If more than 60 minutes has elapsed, the interface between the first and second lifts shall be considered a cold joint. At the discretion of the Engineer, this time may be increased or decreased depending on the use of set retarding admixtures or the ambient weather conditions of temperature, wind and humidity.

(D) Density Testing

In-place field density tests shall be performed in accordance with ASTM C 1040, direct transmission, as soon as possible, but no later than 30 minutes after completion of rolling. Only wet density shall be used for evaluation. The required density shall be not less than 98% of the maximum wet density obtained by ASTM D 1557 or equivalent test method.

(E) Curing

(1) Water Cure

Immediately after final rolling and compaction testing, keep the surface of the RCC pavement continuously moist for 7 days or until an approved curing method is applied.

Apply a water cure with water trucks equipped with misting spray nozzles, soaking hoses, sprinkler system or other means that will assure a uniform moist condition to the RCC. Application of this moisture must be done in a manner that will not wash out or damage the surface of the finished RCC pavement.

(2) Curing Compound

After final finish and immediately after the free surface moisture has disappeared, use a minimum application rate of 0.0067 gallons per square foot when the application equipment is mechanically operated. Provide an inline flow metering device to ensure the proper application rate is provided. Apply the curing compound such that puddling or ponding does not occur on the fresh concrete surface. If the application rate is found to be excessive or insufficient, the Contractor, with approval of the Engineer, can decrease or increase the application rate to a level that achieves a void-free surface without ponding.

(3) Sheeting

Curing paper, plastic and other sheet materials for curing RCC shall conform to ASTM C 171. Hold the coverings securely in place with weights to maintain a close contact with the RCC

surface throughout the entire curing period. Overlap the edges of adjoining sheets and secure them in place with sandbags, planking, pressure adhesive tape, or other approved method.

Protect the RCC from vehicular traffic during the curing period. Completed portions of the RCC pavement may be opened to traffic after seven days or as approved by the Engineer.

(E) Finishing

The finished surface of the RCC pavement, when tested with a 10 foot straight edge or crown surface template, shall not vary from the straight edge or template by more than 3/8 inch at any one point. When the surface smoothness is outside the specified surface tolerance the Contractor shall grind the surface to within the tolerance by use of self-propelled diamond grinders. Milling of the final surface is not acceptable, unless it is for the removal of the pavement.

Maintain the RCC pavement in good condition until all work is completed and accepted. Perform such maintenance at no expense to NCTA.

(F) Joint Construction

Construct joints to assure continuous bond between new and previously placed lanes. A vertical joint is considered a fresh joint when an adjacent RCC lane is placed within 60 minutes of placing the previous lane. Cold vertical joints are any planned or unplanned construction joints that do not qualify as fresh joints.

Vertical cold joints must be cut full depth 6 inches away from the open edge. Cold joints cut within two hours of placement may be cut with an approved wheel cutter, motor grader or other approved method provided that no significant edge raveling occurs. Cold joints cut after two hours of placement shall be saw cut 1/4 to 1/3 depth of the RCC pavement with the rest removed by hand or mechanical equipment. All excess material from the joint cutting shall be removed.

Prior to placing fresh RCC mixture against a compacted cold vertical joint, the joint shall be thoroughly cleaned of any loose or foreign material. The vertical joint face shall be wetted and in a moist condition immediately prior to placement of the adjacent lane. Any modification or substitution of the saw cutting procedure must be demonstrated to and accepted by the Engineer.

The joints between RCC pavement and concrete structures shall be treated as cold vertical joints.

For multi-layer construction a horizontal joint shall be considered a fresh joint when a subsequent RCC lift is placed within 60 minutes of placement of the previous lift. Fresh joints do not require special treatment other than cleaning the surface of all loose material and moistening the surface prior to placement of the subsequent lift.

For horizontal cold joints the surface of the lift shall be kept continuously moist and cleaned of all loose material prior to placement of the subsequent lift. A supplementary bonding material such as a cement slurry or mortar grout is required between lifts. Apply the bonding materials immediately prior to placement of the subsequent lift.

Cut contraction joints in the RCC pavement to induce cracking at pre-selected locations in accordance with the plans or as directed by the Engineer.

Early entry saws should be utilized as soon as possible behind the rolling operation and set to manufacturer's recommendations. Conventionally cut control joints shall be saw cut to 1/4 depth of the compacted RCC pavement. Joints shall be saw cut as soon as those operations will not result in significant raveling or other damage to the RCC pavement.

(G) Opening to Traffic

Traffic or other heavy equipment will not be allowed on the concrete pavement during the curing period. Ensure the compressive strength tests show the RCC has developed at least 2000 psi and is at least 4 days old. If required by the plans or directed by the Engineer, seal the joints before permitting vehicles or equipment on the pavement.

THICKNESS ACCEPTANCE

The Engineer will designate pavement areas to be examined for depth measurement compliance with the plans.

The thickness of the RCC pavement shall not deviate from that shown on the plans or as directed by the Engineer by more than minus 1/2 inch. When the measurement of any core is less than the plan thickness by more than 0.5", the actual thickness of the pavement in this area will be determined by taking additional cores at not less than 10 foot intervals parallel to the center line in each direction from the affected location until in each direction a core is found which is not deficient by more than 0.5". Areas found deficient in thickness by more than 0.5" will be removed full lane width and replaced with concrete of the thickness shown on the plans. No skin patches shall be accepted.
When surface irregularities are outside the tolerances cited above, the contractor shall grind the surface to meet the tolerance at no additional cost to the Department.

STRENGTH ACCEPTANCE

Any RCC pavement not meeting density requirements outlined above will be accepted based on the compressive strength development at 28 days. The compressive strength value shall be at least 3,500 psi. Areas that fail the strength test will be removed and replaced at no additional cost.

TEST SECTION

At least 30 days before the start of paving operations, construct a test section using the approved concrete mix design. This test pavement will allow the Engineer to evaluate the strength of the RCC material, methods of construction, curing process and surface conditions of the completed test pavement. Provide a test section 50 feet long and a minimum of two paver widths wide. Locate the test section in a non-critical area or as indicated on the Plans. Construct the test pavement over an extended period to demonstrate the construction of cold joints in both a longitudinal and transverse direction, as well as fresh joint construction. Use the same equipment, materials and techniques in the test section that will be used to construct the main RCC pavement.

During construction of the test section, establish an optimum rolling pattern and procedure for obtaining a density of not less than 98% of the maximum wet density in accordance with ASTM D 1557 or equivalent test method. In addition, demonstrate the ability to achieve a smooth, hard, uniform surface free of excessive tears, ridges, spalls and loose material.

Strength Testing

Cast field specimens prepared in accordance with ASTM D 1557, ASTM C 1435, or ASTM C 1176. Cure and transport specimens to the laboratory in accordance with ASTM C 31. Should the pavement fail the density requirements, outlined above, the specimens will be tested compressive strength (ASTM C 39).

OVERHEAD SIGN SUPPORTS

Description

Design, fabricate, furnish and erect various types of overhead sign assemblies, including Dynamic Message Sign (DMS) structures. Fabricate supporting structures using tubular members of either aluminum or steel. Tubular members made of aluminum are not allowed for Dynamic Message Sign (DMS) structures. Only one type of material may be used throughout the project. The types of overhead sign assemblies included in this specification are span structures, cantilever structures, and sign structures attached to bridges. Cantilevered DMS signs will not be allowed.

Materials

Structural Steel……...…….……. Section 1072
Overhead Structures……. Section 1096
Signing Materials …….……..... Section 1092
Organic Zinc Repair Paint …… Article 1080-9
Reinforcing Steel ……..... Section 1070

Construction methods

A. General

Fabricate overhead sign assemblies in accordance with the details shown in the approved working drawings and the requirements of these specifications.

No welding, cutting, or drilling in any manner will be permitted in the field, unless approved by the Engineer.

Drill bolt holes and slots to finished size. Holes may also be punched to finished size, provided the diameter of the punched holes is at least twice the thickness of the metal being punched. Flame cutting of bolt holes and slots will not be permitted.

Erect sign panels in accordance with the requirements for Type A or B signs as indicated in the plans or roadway standard drawings. Field drill two holes per connection in the Z bars for attaching signs to overhead structures. Use two bolts at each connection.

Use two coats of a zinc-rich paint to touch up minor scars on all galvanized materials.

B. Shop Drawings

Design the overhead sign supports, including foundations, prior to fabrication. Submit computations and working drawings for the designs to the Engineer for review and acceptance.

Have a professional engineer registered in the State of North Carolina perform the computations and render a set of sealed, signed, and dated drawings detailing the construction of each structure.

Submit to the Engineer for review and acceptance complete design and fabrication details for each overhead sign assembly, including foundations and brackets for supporting the signs. Base design upon the revised structure line drawings, wind load area and the wind speed shown in the plans, and in accordance with the *Standard Specifications for Structural Structures for Highway Signs, Luminaires and Traffic Signals*.

Submit thirteen (13) copies of completely detailed working drawings and one (1) copy of the design computations including all design assumptions for each overhead sign assembly to the Engineer for approval prior to fabrication. Working drawings include complete design and fabrication details (including foundations); provisions for attaching signs, applicable material specifications, and any other information necessary for procuring and replacing any part of the complete overhead sign assembly.

Allow 15days for initial working drawing review after the Engineer receives them. If revisions to working drawings are required, additional time will be required for review and approval of final working drawings.

Approval of working drawings by the Engineer will not relieve the Design-Build Team of responsibility for the correctness of the drawings, or for the fit of all shop and field connections and anchors.

C. Design and Fabrication

The following criteria governs the design of overhead sign assemblies:

Design shall be in accordance with the *Standard Specifications for Structural Supports for Highway Signs, Luminaires and Traffic Signals, 4th Edition, 2001, and the latest Interim Specifications.*

Within this Specification, there are several design criteria that are owner specified. They include:

- The wind pressure map that is developed from the 3-second gust speeds, as provided in Article 3.8, shall be used.
- Overhead cantilever sign structures shall include galloping loads (exclude four-chord horizontal trusses), truck-induced gust loading and natural wind gust loading in the fatigue design, as provided for in Article 11.7.1, 11.7.4 and 11.7.3 respectively.
- The natural wind gust speed in North Carolina shall be assumed to be 5 meters per second or 11.6 mph for inland areas.
- The fatigue importance category used in the design, for each type of structure, as provided for in Article 11.6, Fatigue Importance Factors, shall be Category II unless otherwise shown on the contract plans.
- Wind drag coefficient for Dynamic Message Sign enclosures shall be 1.7.

The following Specification interpretations or criteria shall be used in the design of overhead sign assemblies:

- For design of supporting upright posts or columns, the effective length factor for columns "K", as provided for in Appendix B, Section B.5, shall be taken as the following, unless otherwise approved by the Engineer:

  Case 1 For a single upright post of cantilever or span type overhead sign structure, the effective column length factor, "K", shall be taken as 2.0.

  Case 2 For twin post truss-type upright post with the post connected to one chord of a horizontal truss, the effective column length factor for that column shall be taken as 2.0.

  Case 3 For twin post truss-type upright post with the post connected to two truss chords of a horizontal tri-chord or box truss, the effective column length factor for that column shall be taken as 1.65

- For twin post truss-type upright post, the unbraced length shall be from the chord to post connection to the top of base plate.
- For twin post truss-type upright post, that is subject to axial compression, bending moment, shear, and torsion the post shall satisfy *Standard Specifications for Structural Supports for Highway Signs, Luminaries and Traffic Signals* Equations 5-17, 5-18 and 5-19. To reduce the effects of secondary bending, in lieu of Equation 5-18,the following equation may be used:

$$\frac{f_a}{F_a} + \frac{f_b}{\left(1 - \frac{0.6 f_a}{F_{é}}\right) F_b} + \left(\frac{f_v}{F_v}\right) \leq 1.0$$

Where
fa = Computed axial compression stress at base of post

- The base plate thickness for all uprights and poles shall be a minimum of 2” but not less than that determined by the following criteria and design.

  Case 1 Circular or rectangular solid base plates with the upright pole welded to the top surface of base plate with full penetration butt weld, and where no stiffeners are provided. A base plate with a small center hole, which is less than 1/5 of the upright diameter, and located concentrically with the upright pole, may be considered as a solid base plate.

  The magnitude of bending moment in the base plate, induced by the anchoring force of each anchor bolt shall be, $M = (P \times D_1) / 2$.

  Case 2 Circular or rectangular base plate with the upright pole socketed into and attached to the base plate with two lines of fillet weld, and where no stiffeners are provided, or any base plate with a center hole that is larger in diameter than 1/5 of the upright diameter

  The magnitude of bending moment induced by the anchoring force of each anchor bolt shall be $M = P \times D_2$.

  – M, bending moment at the critical section of the base plate induced by one anchor bolt

  – P, anchoring force of each anchor bolt

  – D_1, horizontal distance between the center of the anchor bolt and the outer face of the upright, or the difference between the radius of the bolt circle and the outside radius of the upright

  – D_2, horizontal distance between the face of the upright and the face of the anchor bolt nut

- The critical section shall be located at the face of the anchor bolt and perpendicular to the radius of the bolt circle. The overlapped part of two adjacent critical sections shall be considered ineffective.

- The thickness of base plate of Case 1 shall not be less than that calculated based on formula for Case 2.

- Uprights, foundations, and trusses that support overhead signs or dynamic message signs shall be designed in accordance with the Overhead Sign Foundation Special Provision for the effects of torsion. Torsion shall be considered from dead load eccentricity of these attachments, as well as for attachments such as walkways, supporting brackets, lights, etc., that add to the torsion in the assembly. Truss vertical and horizontal truss diagonals in particular and any other assembly members shall be appropriately sized for these loads.

- Uprights, foundations, and trusses that support overhead mounted signs or dynamic message signs shall be designed for the proposed sign wind area and future wind areas. The design shall consider the effect of torsion induced by the

eccentric force location of the center of wind force above (or below) the center of the supporting truss. Truss vertical and horizontal truss diagonals in particular and any other assembly members shall be appropriately sized for these loads.

Horizontal components of the supporting structures for overhead signs may be of a truss design or a design using singular (monotube) horizontal members to support the sign panels. Singular (monotube) horizontal members will not be allowed for DMS signs. Provide permanent camber in addition to dead load camber in accordance with the *Standard Specifications for Structural Supports for Highway Signs, Luminaires, and Traffic Signals*. Indicate on the shop drawings the amount of camber provided and the method employed in the fabrication of the support to obtain the camber.

Use cantilever sign structures that meet the following design criteria:

a. Do not exceed an L/150 vertical dead load deflection at the end of the arm due to distortions in the arm and vertical support, where L is the length of the arm from the center of the vertical support to the outer edge of the sign.

b. Do not exceed an L/40 horizontal deflection at the end of the arm due to distortions in the arm and vertical support, as a result of design wind load.

Attach the overhead sign assemblies to concrete foundations by the use of galvanized anchor bolts with galvanized nuts, flat washers, and lock washers. For cantilever structure use a minimum of eight anchor bolts. Provide anchor bolts that have an anchor plate with nut at the end to be embedded in concrete.

Fabricate attachment assemblies for mounting signs in a manner that allows easy removal of sign panels for repair. Provided adequate supporting frames for mounting the lighting luminaires in the positions shown in the plans or approved shop drawings for all overhead sign assemblies to be illuminated.

Anchor Rods

Ensure material used in steel anchor rods conforms to AASHTO M 314, and yield strength does not exceed 55,000 psi. Compute the required projection of the anchor rod above the foundation top. Compute the total projection based on the following:

- Provide between 3 and 5 threads of anchor rod projection above the top nut after tightening is complete. Avoid any additional projection, or a normal depth socket torque wrench can not be used on top nuts.

- Include the sum of the thickness of top nut, top nut flat washer or top nut beveled washers, base plate, leveling nut flat washer or leveling nut beveled washers, leveling nut.

- Set the maximum distance between the bottom of the leveling nut and the foundation top to one nut height to avoid excessive bending stresses in the anchor rod under service conditions.

- Do not use lock washers.

Installation Procedure

1. Place a leveling nut and washer on each anchor rod and install a template on top of the leveling nuts to verify that the nuts are level and uniformly contact the template. Use beveled washers if the leveling nuts cannot be brought into firm contact with the template. Verify that the distance between the bottom of the leveling nuts and the top of the concrete is no more than one nut height.

2. Install the structural element on the anchor rods, and tighten nuts in compliance with steps 3, 4, and 5 below. Do not attach cantilever arms or overhead truss components to the vertical post until all of the top nuts and leveling nuts have been properly tightened on the anchor rods.

3. Install top nuts and washers. Install flat washers under the top and leveling nuts. Use beveled washers if the nuts cannot be brought into firm contact with the base plate. Lubricate threads of the anchor rods, nuts, and bearing surface of the nuts and tighten to a snug-tight condition with a spud wrench following a star pattern (using at least two increments). Snug-tight condition is defined as 20% to 30% of the verification torque (600 ft-lbs.). Lubricant shall be beeswax, stick paraffin, or other approved lubricant.

4. After the top nuts have been snug tightened, snug tighten the bottom nuts up to the base plate using the same procedure as described above. The base-plate must be in firm contact with both the top and bottom nuts to achieve the proper pretension in the anchor rods.

5. Prior to further turning of the nuts, mark the reference position of the top nut in the snug-tight condition by match marking each nut, bolt shank, and base plate. Use ink or paint that is not water-soluble.

6. Turn the top nuts in increments using the star pattern (using at least two full tightening cycles) to 1/6 of a turn. Use a torque wrench to verify that at least 600 ft-lbs. is required to further tighten the top nuts. At least 48 hours after the entire structure and any attachments are erected, use a torque wrench again to verify that at least 600 ft-lbs. is still required to tighten the top nuts. Verify that the leveling nuts remain in firm contact with the base plate.

7. Do not place non-shrink grout between the base plate and foundation. This will allow for future inspection of leveling nuts and for adequate drainage of moisture.

OVERHEAD SIGN FOUNDATIONS

Description

The work covered by this provision consists of the design and construction of overhead sign foundations in accordance with the submitted approved plans and this provision. Design and construct either spread footing type foundations and/or drilled pier type foundations for each overhead sign unless otherwise directed by the Engineer.

Materials

Portland Cement Concrete Production and Delivery ...……...…….....Section 1000
Reinforcing Steel ...……..Section 1070
Anchor Bolts ...……..Article 1072-6
Structural Steel and Overhead Sign Structures ……...Section 1072 and 1096

Construction Methods

1. General

A North Carolina Licensed Professional Engineer must seal all design calculations, drawings and recommendations. Design foundations for the effects of dead, wind and ice loads in accordance with the wind zone load shown on the plans and Section 3 of the *AASHTO Standard Specifications for Structural Supports for Highway Signs, Luminaries and Traffic Signal*s (including interims). Use either spread footing or drilled pier foundations. In some instances, conflicts with drainage structures may dictate a certain type of foundation. Spread footings or dual drilled pier foundations are required for full span overhead signs (no single drilled pier foundations). When designing dual drilled pier foundations, a rectangular grade beam with a moment of inertia approximately equal to either of the drilled piers is required to connect the pier tops.

Provide reinforced concrete design in accordance with either Section 13.7.2 or 13.6.2 (whichever is applicable), allowable stress design method, of the *AASHTO Standard Specifications for Structural Supports for Highway Signs, Luminaries and Traffic Signals* (including interims).

Consider sloping ground in the design, if applicable. Do not exceed an allowable bearing pressure of 3 ksf for spread footings. For drilled pier foundations, do not exceed an allowable lateral soil pressure of 4 ksf for AASHTO Group II Loading. Use the following default soil parameters and groundwater elevation for foundation design in the absence of a site-specific subsurface investigation in accordance with this provision.

Total Unit Weight = 120 pcf

Friction Angle = 30 degrees

Cohesion = 0 psf

Assume the groundwater elevation is at a depth of 7 feet below the ground surface. If the groundwater is encountered at a depth shallower than 7 feet, the overhead sign foundation must be redesigned based upon the actual field conditions. The default soil parameters and allowable pressures do not apply to very soft or loose soil, muck (generally, SPT blow counts per foot less than 4), weathered rock or hard rock (generally, SPT refusal). If soft or loose soil, muck, weathered rock or hard rock conditions are present, a site-specific subsurface investigation and foundation design is required in accordance with this provision.

Design spread footings in accordance with Sections 4.4.1 through 4.4.10, allowable stress design method, of the *AASHTO Standard Specifications for Highway Bridges* (including interims). Restrict uplift due to the eccentricity of the loading to one corner of the footing and the tension area may not exceed 25% of the total bearing area of the spread footing.

Design drilled piers in accordance with Sections 4.6.1 through 4.6.5, allowable stress design method, of the *AASHTO Standard Specifications for Highway Bridges* (including interims). If drilled piers are designed for skin friction only, increase the required length of each drilled pier a minimum of 6 inches to allow for sediment. If drilled piers are designed for end bearing, no additional length is required; however, the drilled piers will be subject to the cleanliness requirements in Section B under "Drilled Pier Construction:" below. Clearly state on the plans whether end bearing was accounted for in the foundation design.

Calculate expected vertical, lateral and torsional movements for single drilled pier foundations. Provide drilled pier foundations that result in a horizontal lateral movement of less than 1 inch at the top of the pier and a horizontal rotational movement of less than 1 inch at the edge of the pier. Also, use a factor of safety of 2.0 for lateral and torsion failure. Preliminary design methods described in Section 13.6.1.1 of the *AASHTO Standard Specifications for Structural Supports for Highway Signs, Luminaries and Traffic Signals* (including interims) may be used to incorporate a factor of safety in foundation design for lateral failure. Wings are required to increase torsion resistance for cantilever signs supported by a single drilled pier.

If a site-specific subsurface investigation is performed, use only an NCDOT Highway Design Branch Pre-Qualified Geotechnical Engineering Firm to provide a site specific foundation design.

2. Subsurface Investigation

If the default soil parameters or allowable pressures referenced above are not applicable for a given overhead sign foundation site, the Engineer may require a site-specific subsurface investigation. If the Engineer requires a site-specific subsurface investigation, the NCTA will perform the borings and provide the data to the Design-Build Team. The subsurface investigation will be provided within two weeks of being notified by the Design-Build Team that the site is at rough grade and accessible to a drill rig.

The Design-Build Team may elect to conduct a site specific subsurface investigation at each proposed overhead sign foundation location in accordance with the requirements listed below, in lieu of using the default soil parameters and allowable pressures referenced above.

Perform a boring at each overhead sign foundation location and provide boring data on an NCDOT Standard Boring Log form. Download this form from the NCDOT site at

http://www.ncdot.org/doh/preconstruct/highway/geotech/contractserv/investigation/Documents/BoringLogs.zip.

A licensed geologist or a professional engineer registered in the State of North Carolina and employed by an NCDOT Highway Design Branch pre-qualified Geotechnical Engineering Firm must seal each boring log. Use only an NCDOT Highway Design Branch pre-qualified Geotechnical Engineering Firm to conduct the subsurface investigation. Perform the investigation only after rough grade (within 3 feet of final grade) is achieved. Locate each boring within 3 feet of the center of the overhead sign foundation. Drill the boring to a minimum depth of 10 feet below the required spread footing bearing or drilled pier tip elevation, whichever is deeper. Conduct Standard Penetrating Tests at 1 ft, 2.5 ft, 5 ft, 7.5 ft, 10 ft, and every 5-ft after 10 ft below the rough grade in accordance with ASTM D-1586. A boring may be terminated above the minimum depth required (10 ft below the foundation elevation) if one of the following conditions occur: (a) a total of 100 blows have been applied in any 2 consecutive 6-in.intervals; (b) a total of 50 blows have been applied with less than 3-in. penetration.

3. Foundation Construction

Excavate footings for overhead sign structures in accordance with the applicable provisions of Section 410 of the 2006 Standard Specifications. Construct footings for overhead sign structures in accordance with Section 825 of the *2006 Standard Specifications*. Construct all footings with Class A concrete. Where rectangular forms are used, use forms that have a chamfer strip at all corners for at least that distance protruding above finished ground. Use chamfers, which measure one-inch along the diagonal face.

Securely brace anchor bolts positioned in the form and hold in proper position and alignment. Provide a rubbed finish on concrete surfaces to be exposed above finished ground in accordance with Section 825-6 (D) of the *2006 Standard Specifications*. Do not erect overhead sign structures on foundations until the concrete has reached a minimum compressive strength of 3000 psi. Determine concrete compressive strength by nondestructive test methods or compressive strength tests made in accordance with AASHTO T22 and T23. Furnish equipment used for nondestructive tests and obtain Engineer's approval before performing the tests.

4. Drilled Pier Construction

A. Excavation

Perform excavations for drilled piers to the required dimensions and lengths including all miscellaneous grading and excavation necessary to install the drilled pier. Depending on the subsurface conditions encountered excavation in hard rock, weathered rock or removal of boulders and debris may be required.

Dispose of drilling spoils as directed by the Engineer and in accordance with Section 802 of the *2006 Standard Specifications*. Drilling spoils consist of all material excavated including water or slurry removed from the excavation either by pumping or with augers.

Construct drilled piers within the tolerances specified herein. If tolerances are exceeded, provide additional construction as approved by the Engineer to bring the piers within the tolerances specified. Construct drilled piers such that the axis at the top of the piers is no more than 3 inches in any direction from the specified position. Build drilled piers within 1% of the plumb deviation for the total length of the piers. When a grade beam is not required at the top of a pier, locate the top of pier elevation between 18 inches above and 6 inches above the finished grade elevation. Form the top of the pier such that the concrete is smooth and level.

If unstable, caving or sloughing soils are anticipated or encountered, stabilize drilled pier excavations with steel casing and/or polymer slurry. Steel casing may be either the sectional type or one continuous corrugated or non-corrugated piece. All steel casings should consist of clean watertight steel of ample strength to withstand handling and driving stresses and the pressures imposed by concrete, earth or backfill. Use steel casings with an outside diameter equal to the specified pier size and a minimum wall thickness of 1/4 inch. . Extract all temporary casings during concrete placement in accordance with this provision unless the Design-Build Team chooses to leave the casing in place in accordance with the requirements below.

Any steel casing left in place will be considered permanent casing. When installing permanent casing do not drill or excavate below the tip of the permanent casing at any time such that the permanent casing is against undisturbed soil. The Design-Build Team may excavate a hole with a minimum diameter of 12 inches smaller than the specified size of the pier in order to facilitate permanent casing installation provided the sides of the excavation do not slough during drilling such that the hole diameter becomes larger than the inside diameter of the casing. Permanent steel casings are only allowed for full span overhead signs as approved by the Engineer and prohibited for cantilever overhead signs. No additional compensation will be paid for permanent casing.

If the Design-Build Team elects to use polymer slurry to stabilize the excavation, use one of the polymers listed in the table below:

PRODUCT	MANUFACTURER
SlurryPro EXL	KB Technologies Ltd 3648 FM 1960 West Suite 107 Houston, TX 77068 (800) 525-5237
Super Mud	PDS Company 105 West Sharp Street El Dorado, AR 71730 (800) 243-7455
Shore Pac GCV	CETCO Drilling Products Group 1500 West Shure Drive Arlington Heights, IL 60004 (800) 527-9948

Use slurry in accordance with the manufacturer's guidelines and recommendations unless approved otherwise by the Engineer. The Design-Build Team should be aware that polymer slurry might not be appropriate for a given site. Polymer slurry should not be used for excavations in very soft or loose soils. If the excavation can not be stabilized with polymer slurry, the Engineer may require a site-specific subsurface investigation (if not done during design) and the use of steel casing. No additional time or compensation will be provided if both steel casing and polymer slurry are required to stabilize the excavation.

Construct all drilled piers such that the piers are cast against undisturbed soil. If a larger casing and drilled pier are required as a result of unstable or caving material during drilling, backfill the excavation before removing the casing to be replaced. No additional time or compensation will be provided for substituting a larger diameter drilled pier in order to construct a drilled pier cast against undisturbed soil.

Any temporary steel casing that becomes bound or fouled during pier construction and cannot be practically removed may constitute a defect in the drilled pier. Improve such defective piers to the satisfaction of the Engineer by removing the concrete and enlarging the drilled pier, providing a replacement pier or other approved means. All corrective measures including redesign as a result of defective piers will not be cause for any claims or requests for additional time or compensation.

B Bottom Cleanliness

After a drilled pier excavation is complete and immediately before concrete placement, demonstrate acceptable bottom cleanliness of the drilled pier excavation to the Engineer for approval if the plans indicate end bearing was used in the design. Provide any equipment, personnel and assistance required for the Engineer to inspect the drilled pier excavation. The pier excavation bottom is considered clean if no portion of the bottom area has more than 3 inches of sediment as determined by the Engineer.

C. Reinforcing Steel

Completely assemble a cage of reinforcing steel consisting of longitudinal and spiral bars and place cage in the drilled pier excavation as a unit immediately upon completion of drilling unless the excavation is entirely cased. If the drilled pier excavation is entirely cased down to the tip, immediate placement of the reinforcing steel and the concrete is not required.

Lift the cage so racking and cage distortion does not occur. Keep the cage plumb during concrete placement operations and casing extraction. Check the position of the cage before and after placing the concrete.

Securely crosstie the vertical and spiral reinforcement at each intersection with double wire. Support or hold down the cage so that the vertical displacement during concrete placement and casing extraction does not exceed 2 inches.

Do not set the cage on the bottom of the drilled pier excavation. Place plastic bolsters under each vertical reinforcing bar that are tall enough to raise the rebar cage off the bottom of the drilled pier excavation a minimum of 3 inches.

In order to ensure a minimum of 3 inches of concrete cover and achieve concentric spacing of the cage within the pier, tie plastic spacer wheels at five points around the cage perimeter. Use spacer wheels that provide a minimum of 3 inches "blocking" from the outside face of the spiral bars to the outermost surface of the drilled pier. Tie spacer wheels that snap together with wire and allow them to rotate. Use spacer wheels that span at least two adjacent vertical bars. Start placing spacer wheels at the bottom of the cage and continue up along its length at maximum 10-foot intervals. Supply additional peripheral spacer wheels at closer intervals as necessary or as directed by the Engineer.

D. Concrete

Begin concrete placement immediately after inserting reinforcing steel into the drilled pier excavation.

1) Concrete Mix

Provide the mix design for drilled pier concrete for approval and, except as modified herein, meeting the requirements of Section 1000 of the *2006 Standard Specifications*.

Designate the concrete as Drilled Pier Concrete with a minimum compressive strength of 4500 psi at 28 days. The Design-Build Team may use a high early strength mix design as approved by the Engineer. Make certain the cementitious material content complies with one of the following options:

- Provide a minimum cement content of 640 lbs/yd^3 and a maximum cement content of 800 lbs/yd^3; however, if the alkali content of the cement exceeds 0.4%, reduce

the cement content by 20% and replace it with fly ash at the rate of 1.2 LB of fly ash per LB of cement removed.

- If Type IP blended cement is used, use a minimum of 665 lbs/yd^3 Type IP blended cement and a maximum of 833 lbs/yd^3 Type IP blended cement in the mix.

Limit the water-cementitious material ratio to a maximum of 0.45. Do not air-entrain drilled pier concrete.

Produce a workable mix so that vibrating or prodding is not required to consolidate the concrete. When placing the concrete, make certain the slump is between 5 and 7 inches for dry placement of concrete or 7 and 9 inches for wet placement of concrete.

Use Type I or Type II cement or Type IP blended cement and either No. 67 or No. 78M coarse aggregate in the mix. Use an approved water-reducer, water-reducing retarder, high-range water-reducer or high-range water-reducing retarder to facilitate placement of the concrete if necessary. Do not use a stabilizing admixture as a retarder in Drilled Pier Concrete without approval of the Engineer. Use admixtures that satisfy AASHTO M194 and add admixtures at the concrete plant when the mixing water is introduced into the concrete. Redosing of admixtures is not permitted.

Place the concrete within 2 hours after introducing the mixing water. Ensure that the concrete temperature at the time of placement is 90°F or less.

2) Concrete Placement

Place concrete such that the drilled pier is a monolithic structure. Temporary casing may be completely removed and concrete placement may be temporarily suspended when the concrete level is within 42 to 48 inches of the ground elevation to allow for placement of anchor bolts and construction of grade beam or wings. Do not pause concrete placement if unstable caving soils are present at the ground surface. Remove any water or slurry above the concrete and clean the concrete surface of all scum and sediment to expose clean, uncontaminated concrete before inserting the anchor bolts and conduit. Resume concrete pouring within 2 hours.

Do not dewater any drilled pier excavations unless the Engineer approves the dewatering and the excavation is entirely cased down to tip. Do not begin to remove the temporary casing until the level of concrete within the casing is in excess of 10 feet above the bottom of the casing being removed. Maintain the concrete level at least 10 feet above the bottom of casing throughout the entire casing extraction operation except when concrete is near the top of the drilled pier elevation. Maintain a sufficient head of concrete above the bottom of casing to overcome outside soil and water pressure. As the temporary casing is withdrawn, exercise care in maintaining an adequate level of concrete within the casing so that fluid trapped behind the casing is displaced upward and discharged at the ground surface without contaminating or displacing the drilled pier concrete. Exerting downward pressure, hammering or vibrating the temporary casing is permitted to facilitate extraction.

Keep a record of the volume of concrete placed in each drilled pier excavation and make it available to the Engineer.

After all the pumps have been removed from the excavation, the water inflow rate determines the concrete placement procedure. If the inflow rate is less than 6 inches per half-hour, the concrete placement is considered dry. If the water inflow rate is greater than 6 inches per half-hour, the concrete placement is considered wet.

- Dry Placement: Before placing concrete, make certain the drilled pier excavation is dry so the flow of concrete completely around the reinforcing steel can be certified by visual inspection. Place the concrete by free fall with a central drop method where the concrete is chuted directly down the center of the excavation.

- Wet Placement: Maintain a static water or slurry level in the excavation before placing concrete. Place concrete with a tremie or a pump in accordance with the applicable parts of Sections 420-4 and 420-5 of the *2006 Standard Specifications*. Use a tremie tube or pump pipe made of steel with watertight joints. Passing concrete through a hopper at the tube end or through side openings as the tremie is retrieved during concrete placement is permitted. Use a discharge control to prevent concrete contamination when the tremie tube or pump pipe is initially placed in the excavation. Extend the tremie tube or pump pipe into the concrete a minimum of 5 feet at all times except when the concrete is initially introduced into the pier excavation. If the tremie tube or pump pipe pulls out of the concrete for any reason after the initial concrete is placed, restart concrete placement with a steel capped tremie tube or pump pipe.

  Once the concrete in the excavation reaches the same elevation as the static water level, placing concrete with the dry method is permitted. Before changing to the dry method of concrete placement, remove any water or slurry above the concrete and clean the concrete surface of all scum and sediment to expose clean, uncontaminated concrete.

  Vibration is only permitted, if needed, in the top 10 feet of the drilled pier or as approved by the Engineer. Remove any contaminated concrete from the top of the drilled pier and wasted concrete from the area surrounding the drilled pier upon completion.

3) Concrete Placement Time

Place concrete within the time frames specified in Table 1000-2 of the *2006 Standard Specifications* for Class AA concrete except as noted herein. Do not place concrete so fast as to trap air, water, fluids, soil or any other deleterious materials in the vicinity of the reinforcing steel and the annular zone between the rebar cage and the excavation walls. Should a delay occur because of concrete delivery or other factors reduce the placement rate to maintain some movement of the concrete. No more than 45 minutes is allowed between placements.

E. Scheduling and Restrictions:

If caving or sloughing occurs, no additional compensation will be provided for additional concrete to fill the resulting voids.

During the first 16 hours after a drilled pier has achieved its initial concrete set as determined by the Engineer, do not drill adjacent piers, do not install adjacent piles and do not allow any heavy construction equipment loads or “excessive” vibrations to occur at any point within a 20 foot radius of the drilled pier.

In the event that the procedures described herein are performed unsatisfactorily, the Engineer reserves the right to shut down the construction operations or reject the drilled piers. If the integrity of a drilled pier is in question, use core drilling, sonic or other approved methods at no additional cost to the NCTA and under the direction of the Engineer. Dewater and backfill core drill holes with an approved high strength grout with a minimum compressive strength of 4500 psi. Propose remedial measures for any defective drilled piers and obtain approval of all proposals from the Engineer before implementation. No additional time or compensation will be provided for losses or damage due to remedial work or any investigation of drilled piers found defective or not in accordance with this provision or the plans.

AVAILABILITY OF FUNDS - TERMINATION OF CONTRACTS

General Statute 143C-6-11. (h) Highway Appropriation is hereby incorporated verbatim in this contract as follows:

"(h). Amounts Encumbered – Transportation project appropriations may be encumbered in the amount of allotments made to the Department of Transportation by the Director for the estimated payments for transportation project contract work to be performed in the appropriation fiscal year. The allotments shall be multiyear allotments and shall be based on estimated revenues and shall be subject to the maximum contract authority contained in *General Statute 143C-6-11(c)*. Payment for transportation project work performed pursuant to contract in any fiscal year other than the current fiscal year is subject to appropriations by the General Assembly. Transportation project contracts shall contain a schedule of estimated completion progress, and any acceleration of this progress shall be subject to the approval of the Department of Transportation provided funds are available. The State reserves the right to terminate or suspend any transportation project contract, and any transportation project contract shall be so terminated or suspended if funds will not be available for payment of the work to be performed during that fiscal year pursuant to the contract. In the event of termination of any contract, the contractor shall be given a written notice of termination at least 60 days before completion of scheduled work for which funds are available. In the event of termination, the contractor shall be paid for the work already performed in accordance with the contract specifications."

Payment will be made on any contract terminated pursuant to the special provision in accordance with Section 108-13 Item E of the Standard Special Provisions, Division 1 (found elsewhere in this proposal.

This provision applies equally to the NCTA and this NCTA project.

STANDARD SPECIAL PROVISION

NCDOT GENERAL SEED SPECIFICATIONS FOR SEED QUALITY

(5-17-05) Z-3

Seed shall be sampled and tested by the North Carolina Department of Agriculture and Consumer Services, Seed Testing Laboratory. When said samples are collected, the vendor shall supply an independent laboratory report for each lot to be tested. Results from seed so sampled shall be final. Seed not meeting the specifications shall be rejected by the NCDOT and shall not be delivered to North Carolina Department of Transportation warehouses. If seed has been delivered it shall be available for pickup and replacement at the supplier's expense.

Any re-labeling required by the North Carolina Department of Agriculture and Consumer Services, Seed Testing Laboratory, that would cause the label to reflect as otherwise specified herein shall be rejected by the North Carolina Department of Transportation.

Seed shall be free from seeds of the noxious weeds Johnsongrass, Balloonvine, Jimsonweed, Witchweed, Itchgrass, Serrated Tussock, Showy Crotalaria, Smooth Crotalaria, Sicklepod, Sandbur, Wild Onion, and Wild Garlic. Seed shall not be labeled with the above weed species on the seed analysis label. Tolerances as applied by the Association of Official Seed Analysts will NOT be allowed for the above noxious weeds except for Wild Onion and Wild Garlic.

Tolerances established by the Association of Official Seed Analysts will generally be recognized. However, for the purpose of figuring pure live seed, the found pure seed and found germination percentages as reported by the North Carolina Department of Agriculture and Consumer Services, Seed Testing Laboratory will be used. Allowances, as established by the NCDOT, will be recognized for minimum pure live seed as listed on the following pages.

The specifications for restricted noxious weed seed refers to the number per pound as follows:

Restricted Noxious Weed	Limitations per Lb. Of Seed	Restricted Noxious Weed	Limitations per Lb. of Seed
Blessed Thistle	4 seeds	Bermudagrass	27 seeds
Cocklebur	4 seeds	Cornflower (Ragged Robin)	27 seeds
Spurred Anoda	4 seeds	Texas Panicum	27 seeds
Velvetleaf	4 seeds	Bracted Plantain	54 seeds
Morning-glory	8 seeds	Buckhorn Plantain	54 seeds
Corn Cockle	10 seeds	Broadleaf Dock	54 seeds
Wild Radish	12 seeds	Curly Dock	54 seeds
Purple Nutsedge	27 seeds	Dodder	54 seeds
Yellow Nutsedge	27 seeds	Giant Foxtail	54 seeds
Canada Thistle	27 seeds	Horsenettle	54 seeds
Field Bindweed	27 seeds	Quackgrass	54 seeds
Hedge Bindweed	27 seeds	Wild Mustard	54 seeds

Seed of Pensacola Bahiagrass shall not contain more than 7% inert matter, Kentucky Bluegrass and Fine or Hard Fescue shall not contain more than 5% inert matter whereas a maximum of 2% inert matter will be allowed on all other kinds of seed. In addition, all seed shall not contain more than 2% other crop seed or more than 1% total weed seed. The germination rate as tested

by the North Carolina Department of Agriculture shall not fall below 70%, which includes both dormant and hard seed. Seed shall be labeled with not more than 7%, 5% or 2% inert matter (according to above specifications), 2% other crop seed and 1% total weed seed.

Exceptions may be made for minimum pure live seed allowances when cases of seed variety shortages are verified. Pure live seed percentages will be applied in a verified shortage situation. Those purchase orders of deficient seed lots will be credited with the percentage that the seed is deficient.

FURTHER SPECIFICATIONS FOR EACH SEED GROUP ARE GIVE BELOW:

Minimum 85% pure live seed; maximum 1% total weed seed; maximum 2% total other crop seed; maximum 144 restricted noxious weed seed per pound. Seed less than 83% pure live seed will not be approved.

Sericea Lespedeza
Oats (seeds)

Minimum 80% pure live seed; maximum 1% total weed seed; maximum 2% total other crop; maximum 144 restricted noxious weed seed per pound. Seed less than 78% pure live seed will not be approved.

Tall Fescue (all approved varieties)	Bermudagrass
Kobe Lespedeza	Browntop Millet
Korean Lespedeza	German Millet - Strain R
Weeping Lovegrass	Centipedegrass
Carpetgrass	Clover - Red/White/Crimson

Minimum 78% pure live seed; maximum 1% total weed seed; maximum 2% total other crop seed; maximum 144 restricted noxious weed seed per pound. Seed less than 76% pure live seed will not be approved.

Common or Sweet Sundangrass

Minimum 76% pure live seed; maximum 1% total weed seed; maximum 2% total other crop seed; maximum 144 restricted noxious weed seed per pound. Seed less than 74% pure live seed will not be approved.

Rye (grain; all varieties)
Kentucky Bluegrass (all approved varieties)
Hard Fescue (all approved varieties)
Shrub (bicolor) Lespedeza

Minimum 70% pure live seed; maximum 1% total weed seed; maximum 2% total other crop seed; maximum 144 restricted noxious weed seed per pound. Seed less than 70% pure live seed will not be approved.

Crownvetch	Pensacola Bahiagrass
Japanese Millet	Switchgrass
Reed Canary Grass	

Minimum 65% pure live seed; maximum 1% total weed seed; maximum 2% total other crop seed; maximum 144 restricted noxious weed seed per pound. Seed less than 60% pure live seed will not be approved.

Little Bluestem
Switchgrass

Minimum 75% pure live seed; maximum 1% total weed seed; maximum 2% total other crop seed; maximum 144 restricted noxious weed seed per pound. Seed less than 70% pure live seed will not be approved.

Big Bluestem

Minimum 78% pure live seed; maximum 1% total weed seed; maximum 2% total other crop seed; maximum 144 restricted noxious weed seed per pound. Seed less than 73% pure live seed will not be approved.

Indiangrass

***** STANDARD SPECIAL PROVISIONS *****

ERRATA

(12-18-07) Z-4

Revise the *Standard Specifications for Roads and Structures July 2006* on all projects as follows:

Division 1

- Page 1-1, replace AREA - American Railway Engineering Association with ***American Railway Engineering and Maintenance of Way Association*.**
- Page 1-7, remove **–L-** in middle of page after INVITATION TO BID and before LABORATORY.
- Page 1-25, 102-16(R), move 2nd paragraph to left margin. It is not a part of this subarticle, but part of the entire article.

Division 2

- Page 2-15, Subarticle 226-3, 5th paragraph, first line, replace the word *in* with the word ***is***.
- Page 2-23, Subarticle 235-4(B)(9), at the end of the sentence, replace finished greater with finished ***grade***.
- Page 2-28, Article 260-3, First paragraph, second line, remove the word *foot*.

Division 3

- Page 3-13, Article 340-4, Second paragraph, change Flowable Backfill to Flowable ***Fill***

Division 4

- Page 4-70, 442-13(B) Second sentence, change SSPC Guide 6I to SSPC Guide ***6.***
- Pages 4-72, 4-74, 4-76, at the top of the page, substitute the heading Section 452 with Section ***450*.**
- Page 4-79, at the top of the page, substitute the heading Section 450 with Section ***452***
- Page 4-80, change 452-7 to 452-***6*** at the top of the page.
- Page 4-80, change Pay Item ___Steel Pile Retaining Walls, to ***Sheet*** Pile Retaining Walls.
- Page 4-88, 462-4, Title, Replace last word Measurement with the word ***PAYMENT***

Division 5

- Page 5-8, Article 501-15 Measurement and Payment, delete the 4th paragraph that begins The quantity of lime, measured as provided …

Division 6

- Page 6-3, Article 600-9, 2nd Paragraph on this page, replace 818-5 with 818-***4***.
- Pages 6-30 and 31, Subarticle 610-3(A)(13) Move 2 paragraphs from the margin to the right under the number (13).

- Page 6-43, Article 610-8, 4th paragraph, remove the first ***the***
- Page 6-44, 2nd full paragraph, 1st sentence, delete the first ***and*** and add ***transverse*** just before cross-slope control.
- Page 6-51, at the top of the page, add ***610-14*** on the same line, and just before the heading MAINTENANCE.
- Page 6-53, Article 620-4 sixth paragraph, second line; the word that should be ***which***.
- Page 6-66, title, Replace EXISTNG with **EXISTING**
- Page 6-66, Article 657-1, Description, first sentence, replace PS/AR (hot-poured rubber asphalt with ***hot applied joint sealer***.
- Page 6-66, Article 657-2, replace PS/AR (Hot-Poured Rubber Asphalt with the following:

Item	Section
Hot Applied Joint Sealer	***1028-2***

- Page 6-67, at the top of the page, substitute the heading Section 654 with Section ***657.***
- Page 6-67, Article 657-3 Construction Methods, 2nd paragraph, replace PS/AR sealant with ***hot applied joint sealer***.
- Page 6-71, 660-9(B)(1), Replace the first sentence of the first paragraph with the following:

  Using the quantities shown in *Table 660-1*, apply asphalt material to the existing surface followed by an application of No. 78 M or lightweight aggregate.

- Page 6-89, Add a period at the end of the last sentence at the bottom of the page.
- Page 6-90, Article 663-5, first paragraph, first sentence, change 50oF to ***50°F;*** third paragraph, fourth sentence change 325oF to ***325°F.***

Division 7

- Page 7-12, at the top of the page, substitute the heading Section 710 with Section ***700***.
- Page 7-15, Article 710-9, 4th paragraph, last line, change 710-11(B) to 710-1***0***(B).

Division 8

- Page 8-13, Article 808-3, 4th Paragraph, third line, replace Eexcavation with ***Excavation***
- Page 8-35, Article 848-2, Item: Replace Cncrete with ***Concrete***

Division 9

- Page 9-2, add ***901-3*** just before CONSTRUCTION METHODS

Division 10

- Page 10-12, near bottom of page add ***(C)*** before Proportioning and Mixing of Modified Compositions, which should be bold type.

- Page 10-28, at the top of the page, substitute Section 100***6*** for 1005.
- Page 10-54, Subarticle 1018-2A), First line, substitute ***(B)*** for II, third line, substitute ***(B)(2)*** for II-b.
- Pages 10-56, 10-58, 10-60 at the top of the page, substitute Section 1018 with Section ***1020.***
- Page 10-84, Table 1042-1, Class 2, Maximum, change from 23r to ***23***.
- Page 10-84, Article 1042-2 Testing, last sentence, replace the word alterations with the word ***cycles***.
- Page 10-100, Table 1056-1, replace on the line for Trapezoidal Tear Strength:

Type 1	Type 2	Type 3		Type 4
		Class A	Class B	Soil Stabilization
45 lb	***75*** lb	--	--	***75*** lb

- Page 10-116, Subarticle 1070-10, first paragraph, second sentence, add ***or*** just before cold-forged sleeve.
- Pages 10-136 through 10-147, at the top of the page, substitute Section 1074 with Section ***1072***.
- Page 10-157, Article 1077-11, first paragraph, change the reference from Subarticle 420-18(B) to Subarticle 420-***17***(B).
- Page 10-211, at the top of the page, substitute Section 1081 with Section ***1082.***
- Page 10-229, add ***1088-6 BLANK*** on the line above 1088-7 TUBULAR MARKERS.
- Page 10-244, add **1089-10 *BLANK*** and **1089-11 *BLANK*** on the lines just above 1089-12 FLAGGER.
- Page 10-272, delete Article 1098-6 in its entirety. Renumber Articles 1098-7 through 1098-17 as Articles 1098-6 through 1098-16 consecutively.

Division 12

- Page 12-21 Add ***1266-2*** just before the heading MATERIALS.

Division 15

- Page 15-2 add ***1500-4*** just before the heading WEEKEND, NIGHT AND HOLIDAY WORK.
- Page 15-4, Subarticle 1505-3(A)(2), replace the 2nd line with the following: ***Provide shielding or shoring as required under Section 150 or as required elsewhere in the contract.***
- Page 15-5, add ***1505-6*** on the same line and just before the heading MEASUREMENT AND PAYMENT. (Remove the period after PAYMENT.)

- Page 15-6, Article 1505-6(3), delete *in Section 1175* and replace it with *elsewhere in the contract*.
- Page 15-8, add **1510-4** on the same line and just before the heading MEASUREMENT AND PAYMENT.
- Page 15-10, substitute **BLANK** for CONSTRUCTION REQUIREMENTS on the same line and just before 1515-4.
- Page 15-10, substitute **CONSTRUCTION REQUIREMENTS** for General Requirements
- Page 15-10, Article 1515-4, add ***(D)*** just before the bolded Fire Hydrants.
- Page 15-13, Article 1520-3, 8th paragraph, add ***pipe*** after diameter.
- Page 15-22, add ***1540-3*** on the same line and just before the heading CONSTRUCTION REQUIREMENTS
- Page 15-28, Replace 1550-6 METHOD OF MEASUREMENT with ***MEASUREMENT AND PAYMENT.***

Division 16

- Page 16-12, Subarticle 1632-1(C) ¼ Inch hardware cloth, change the minimum width from 24 inches to ***48*** inches.

Division 17

- Page 17-19, Subarticle 1725-2 Material, Second paragraph, change Article 1098-7 to 1098-***8***
- Page 17-20, Subarticle 1726-2 Material, Second paragraph, change Article 1098-8 to 1098-**9**

END

STANDARD SPECIAL PROVISION

AWARD OF CONTRACT

(6-28-77) Z-6

"The NCTA, in accordance with the provisions of *Title VI of the Civil Rights Act of 1964* (78 Stat. 252) and the Regulations of the Department of Transportation (*49 C.F.R., Part 21*), issued pursuant to such act, hereby notifies all bidders that it will affirmatively insure that the contract entered into pursuant to this advertisement will be awarded to the lowest responsible bidder without discrimination on the ground of race, color, or national origin".

***** STANDARD SPECIAL PROVISIONS *****

MINORITY AND FEMALE EMPLOYMENT REQUIREMENTS

(12-18-07) Z-7

NOTICE OF REQUIREMENTS FOR AFFIRMATIVE ACTION TO ENSURE EQUAL EMPLOYMENT OPPORTUNITY (*EXECUTIVE NUMBER 11246*)

1. The goals and timetables for minority and female participation, expressed in percentage terms for the Contractor's aggregate workforce in each trade on all construction work in the covered area, see as shown on the attached sheet entitled "Employment Goals for Minority and Female Participation".

These goals are applicable to all the Contractor's construction work (whether or not it is Federal or federally assisted) performed in the covered area. If the Contractor performs construction work in a geographical area located outside of the covered area, it shall apply the goals established for such geographical area where the work is actually performed. With regard to this second area, the Contractor also is subject to the goals for both its federally involved and nonfederally involved construction.

The Contractor's compliance with the Executive Order and the regulations in *41 CFR Part 60-4* shall be based on its implementation of the Equal Opportunity Clause, specific affirmative action obligations required by the specifications set forth in *41 CFR 60-4.3(a)*, and its effort to meet the goals. The hours of minority and female employment and training must be substantially uniform throughout the length of the contract, and in each trade and the Contractor shall make a good faith effort to employ minorities and women evenly on each of its projects. The transfer of minority or female employees or trainees from Contractor to Contractor or from project to project or the sole purpose of meeting the Contractor's goals shall be a violation of the contract, the executive Order and the regulations *in 41 CFR Part 60-4*. Compliance with the goals will be measured against the total work hours performed.

2. As used in this Notice and in the contract resulting from this solicitation, the "covered area" is the county or counties shown on the cover sheet of the proposal form and contract.

EMPLOYMENT GOALS FOR MINORITY AND FEMALE PARTICIPATION

Economic Areas

Area 023 29.7%
Bertie County
Camden County
Chowan County
Gates County
Hertford County
Pasquotank County
Perquimans County

Area 024 31.7%
Beaufort County
Carteret County
Craven County
Dare County
Edgecombe County
Green County
Halifax County
Hyde County
Jones County
Lenoir County
Martin County
Nash County
Northampton County
Pamlico County
Pitt County
Tyrrell County
Washington County
Wayne County
Wilson County

Area 025 23.5%
Columbus County
Duplin County
Onslow County
Pender County

Area 026 33.5%
Bladen County
Hoke County
Richmond County
Robeson County
Sampson County
Scotland County

Area 027 24.7%
Chatham County
Franklin County
Granville County
Harnett County
Johnston County
Lee County
Person County
Vance County
Warren County

Area 028 15.5%
Alleghany County
Ashe County
Caswell County
Davie County
Montgomery County
Moore County
Rockingham County
Surry County
Watauga County
Wilkes County

Area 029 15.7%
Alexander County
Anson County
Burke County
Cabarrus County
Caldwell County
Catawba County
Cleveland County
Iredell County
Lincoln County
Polk County
Rowan County
Rutherford County
Stanly County

Area 0480 8.5%
Buncombe County
Madison County

Area 030 6.3%
Avery County
Cherokee County
Clay County
Graham County
Haywood County
Henderson County
Jackson County
McDowell County
Macon County
Mitchell County
Swain County
Transylvania County
Yancey County

SMSA Areas

Area 5720 26.6%
Currituck County

Area 9200 20.7%
Brunswick County
New Hanover County

Area 2560 24.2%
Cumberland County

Area 6640 22.8%
Durham County
Orange County
Wake County

Area 1300 16.2%
Alamance County

Area 3120 16.4%
Davidson County
Forsyth County
Guilford County
Randolph County
Stokes County
Yadkin County

Area 1520 18.3%
Gaston County
Mecklenburg County
Union County

Goals for Female

Participation in Each Trade

(Statewide) 6.9%

*** STANDARD SPECIAL PROVISIONS ***

REQUIRED CONTRACT PROVISIONS FEDERAL-AID CONSTRUCTION CONTRACTS (FHWA-1273)

I. General

II. Nondiscrimination

III. Nonsegregated Facilities

IV. Payment of Predetermined Minimum Wage

V. Statements and Payrolls

VI. Record of Materials, Supplies, and Labor

VII. Subletting or Assigning the Contract

VIII. Safety: Accident Prevention

IX. False Statements Concerning Highway Projects

X. Implementation of Clean Air Act and Federal Water Pollution Control Act

XI. Certification Regarding Debarment, Suspension Ineligibility, and Voluntary Exclusion

XII. Certification Regarding Use of Contract Funds for Lobbying

I. GENERAL

1. These contract provisions shall apply to all work performed on the contract by the contractor's own organization and with the assistance of workers under the contractor's immediate superintendence and to all work performed on the contract by piecework, station work, or by subcontract.

2. Except as otherwise provided for in each section, the contractor shall insert in each subcontract all of the stipulations contained in these Required Contract Provisions, and further require their inclusion in any lower tier subcontract or purchase order that may in turn be made. The Required Contract Provisions shall not be incorporated by reference in any case. The prime contractor shall be responsible for compliance by any subcontractor or lower tier subcontractor with these Required Contract Provisions.

3. A breach of any of the stipulations contained in these Required Contract Provisions shall be sufficient grounds for termination of the contract.

4. A breach of the following clauses of the Required Contract Provisions may also be grounds for debarment as provided in 29 CFR 5.12:

   Section I, paragraph 2;

   Section IV, paragraphs 1, 2, 3, 4, and 7;

   Section V, paragraphs 1 and 2a through 2g.

5. Disputes arising out of the labor standards provisions of Section IV (except paragraph 5) and Section V of these Required Contract Provisions shall not be subject to the general disputes clause of this contract. Such disputes shall be resolved in accordance with the procedures of the U.S. Department of Labor (DOL) as set forth in 29 CFR 5, 6, and 7. Disputes within the meaning of this clause include disputes between the contractor (or any of its subcontractors) and the contracting agency, the DOL, or the contractor's employees or their representatives.

6. **Selection of Labor:** During the performance of this contract, the contractor shall not:

   a. discriminate against labor from any other State, possession, or territory of the United States (except for employment preference for Appalachian contracts, when applicable, as specified in Attachment A), or

   b. employ convict labor for any purpose within the limits of the project unless it is labor performed by convicts who are on parole, supervised release, or probation.

II. NONDISCRIMINATION

(Applicable to all Federal-aid construction contracts and to all related subcontracts of $10,000 or more.)

1. **Equal Employment Opportunity:** Equal employment opportunity (EEO) requirements not to discriminate and to take affirmative action to assure equal opportunity as set forth under laws, executive orders, rules, regulations (28 CFR 35, 29 CFR 1630 and 41 CFR 60) and orders of the Secretary of Labor as modified by the provisions prescribed herein, and imposed pursuant to 23 U.S.C. 140 shall constitute the EEO and specific affirmative action standards for the contractor's project activities under this contract. The Equal Opportunity Construction Contract Specifications set forth under 41 CFR 60-4.3 and the provisions of the American Disabilities Act of 1990 (42 U.S.C. 12101 et seq.) set forth under 28 CFR 35 and 29 CFR 1630 are incorporated by reference in this contract. In the execution of this contract, the contractor agrees to comply with the following minimum specific requirement activities of EEO:

   a. The contractor will work with the State highway agency (SHA) and the Federal Government in carrying out EEO obligations and in their review of his/her activities under the contract.

b. The contractor will accept as his operating policy the following statement:

> "It is the policy of this Company to assure that applicants are employed, and that employees are treated during employment, without regard to their race, religion, sex, color, national origin, age or disability. Such action shall include: employment, upgrading, demotion, or transfer; recruitment or recruitment advertising; layoff or termination; rates of pay or other forms of compensation; and selection for training, including apprenticeship, preapprenticeship, and/or on-the-job training."

2. **EEO Officer:** The contractor will designate and make known to the SHA contracting officers an EEO Officer who will have the responsibility for and must be capable of effectively administering and promoting an active contractor program of EEO and who must be assigned adequate authority and responsibility to do so.

3. **Dissemination of Policy:** All members of the contractor's staff who are authorized to hire, supervise, promote, and discharge employees, or who recommend such action, or who are substantially involved in such action, will be made fully cognizant of, and will implement, the contractor's EEO policy and contractual responsibilities to provide EEO in each grade and classification of employment. To ensure that the above agreement will be met, the following actions will be taken as a minimum:

   a. Periodic meetings of supervisory and personnel office employees will be conducted before the start of work and then not less often than once every six months, at which time the contractor's EEO policy and its implementation will be reviewed and explained. The meetings will be conducted by the EEO Officer.

   b. All new supervisory or personnel office employees will be given a thorough indoctrination by the EEO Officer, covering all major aspects of the contractor's EEO obligations within thirty days following their reporting for duty with the contractor.

   c. All personnel who are engaged in direct recruitment for the project will be instructed by the EEO Officer in the contractor's procedures for locating and hiring minority group employees.

   d. Notices and posters setting forth the contractor's EEO policy will be placed in areas readily accessible to employees, applicants for employment and potential employees.

   e. The contractor's EEO policy and the procedures to implement such policy will be brought to the attention of employees by means of meetings, employee handbooks, or other appropriate means.

4. **Recruitment:** When advertising for employees, the contractor will include in all advertisements for employees the notation: "An Equal Opportunity Employer." All such advertisements will be placed in publications having a large circulation among minority groups in the area from which the project work force would normally be derived.

   a. The contractor will, unless precluded by a valid bargaining agreement, conduct systematic and direct recruitment through public and private employee referral sources likely to yield qualified minority group applicants. To meet this requirement, the contractor will identify sources of potential minority group employees, and establish with such identified sources procedures whereby minority group applicants may be referred to the contractor for employment consideration.

   b. In the event the contractor has a valid bargaining agreement providing for exclusive hiring hall referrals, he is expected to observe the provisions of that agreement to the extent that the system permits the contractor's compliance with EEO contract provisions. (The DOL has held that where implementation of such agreements have the effect of discriminating against minorities or women, or obligates the contractor to do the same, such implementation violates Executive Order 11246, as amended.)

   c. The contractor will encourage his present employees to refer minority group applicants for employment. Information and procedures with regard to referring minority group applicants will be discussed with employees.

5. **Personnel Actions:** Wages, working conditions, and employee benefits shall be established and administered, and personnel actions of every type, including hiring, upgrading, promotion, transfer, demotion, layoff, and termination, shall be taken without regard to race, color, religion, sex, national origin, age or disability. The following procedures shall be followed:

   a. The contractor will conduct periodic inspections of project sites to insure that working conditions and employee facilities do not indicate discriminatory treatment of project site personnel.

   b. The contractor will periodically evaluate the spread of wages paid within each classification to determine any evidence of discriminatory wage practices.

   c. The contractor will periodically review selected personnel actions in depth to determine whether there is evidence of discrimination. Where evidence is found, the contractor will promptly take corrective action. If the review indicates that the discrimination may extend beyond the actions reviewed, such corrective action shall include all affected persons.

   d. The contractor will promptly investigate all complaints of alleged discrimination made to the contractor in connection with his obligations under this contract, will attempt to resolve such complaints, and will take appropriate corrective action within a reasonable time. If the investigation indicates that the discrimination may affect persons other than the complainant, such corrective action shall include such other persons. Upon completion of each investigation, the contractor will inform every complainant of all of his avenues of appeal.

6. **Training and Promotion:**

   a. The contractor will assist in locating, qualifying, and increasing the skills of minority group and women employees, and applicants for employment.

   b. Consistent with the contractor's work force requirements and as permissible under Federal and State regulations, the contractor shall make full use of training programs, i.e., apprenticeship, and on-the-job training programs for the geographical area of contract performance. Where feasible, 25 percent of apprentices or trainees in each occupation shall be in their first year of apprenticeship or training. In the event a special provision for training is provided under this contract, this subparagraph will be superseded as indicated in the special provision.

c. The contractor will advise employees and applicants for employment of available training programs and entrance requirements for each.

d. The contractor will periodically review the training and promotion potential of minority group and women employees and will encourage eligible employees to apply for such training and promotion.

7. **Unions:** If the contractor relies in whole or in part upon unions as a source of employees, the contractor will use his/her best efforts to obtain the cooperation of such unions to increase opportunities for minority groups and women within the unions, and to effect referrals by such unions of minority and female employees. Actions by the contractor either directly or through a contractor's association acting as agent will include the procedures set forth below:

a. The contractor will use best efforts to develop, in cooperation with the unions, joint training programs aimed toward qualifying more minority group members and women for membership in the unions and increasing the skills of minority group employees and women so that they may qualify for higher paying employment.

b. The contractor will use best efforts to incorporate an EEO clause into each union agreement to the end that such union will be contractually bound to refer applicants without regard to their race, color, religion, sex, national origin, age or disability.

c. The contractor is to obtain information as to the referral practices and policies of the labor union except that to the extent such information is within the exclusive possession of the labor union and such labor union refuses to furnish such information to the contractor, the contractor shall so certify to the SHA and shall set forth what efforts have been made to obtain such information.

d. In the event the union is unable to provide the contractor with a reasonable flow of minority and women referrals within the time limit set forth in the collective bargaining agreement, the contractor will, through independent recruitment efforts, fill the employment vacancies without regard to race, color, religion, sex, national origin, age or disability; making full efforts to obtain qualified and/or qualifiable minority group persons and women. (The DOL has held that it shall be no excuse that the union with which the contractor has a collective bargaining agreement providing for exclusive referral failed to refer minority employees.) In the event the union referral practice prevents the contractor from meeting the obligations pursuant to Executive Order 11246, as amended, and these special provisions, such contractor shall immediately notify the SHA.

8. **Selection of Subcontractors, Procurement of Materials and Leasing of Equipment:** The contractor shall not discriminate on the grounds of race, color, religion, sex, national origin, age or disability in the selection and retention of subcontractors, including procurement of materials and leases of equipment.

a. The contractor shall notify all potential subcontractors and suppliers of his/her EEO obligations under this contract.

b. Disadvantaged business enterprises (DBE), as defined in 49 CFR 23, shall have equal opportunity to compete for and perform subcontracts which the contractor enters into pursuant to this contract. The contractor will use his best efforts to solicit bids from and to utilize DBE subcontractors or subcontractors with meaningful minority group and female representation among their employees. Contractors shall obtain lists of DBE construction firms from SHA personnel.

c. The contractor will use his best efforts to ensure subcontractor compliance with their EEO obligations.

9. **Records and Reports:** The contractor shall keep such records as necessary to document compliance with the EEO requirements. Such records shall be retained for a period of three years following completion of the contract work and shall be available at reasonable times and places for inspection by authorized representatives of the SHA and the FHWA.

a. The records kept by the contractor shall document the following:

1. The number of minority and non-minority group members and women employed in each work classification on the project;

2. The progress and efforts being made in cooperation with unions, when applicable, to increase employment opportunities for minorities and women;

3. The progress and efforts being made in locating, hiring, training, qualifying, and upgrading minority and female employees; and

4. The progress and efforts being made in securing the services of DBE subcontractors or subcontractors with meaningful minority and female representation among their employees.

b. The contractors will submit an annual report to the SHA each July for the duration of the project, indicating the number of minority, women, and non-minority group employees currently engaged in each work classification required by the contract work. This information is to be reported on Form FHWA-1391. If on-the-job training is being required by special provision, the contractor will be required to collect and report training data.

III. **NONSEGREGATED FACILITIES**

(Applicable to all Federal-aid construction contracts and to all related subcontracts of $10,000 or more.)

a. By submission of this bid, the execution of this contract or subcontract, or the consummation of this material supply agreement or purchase order, as appropriate, the bidder, Federal-aid construction contractor, subcontractor, material supplier, or vendor, as appropriate, certifies that the firm does not maintain or provide for its employees any segregated facilities at any of its establishments, and that the firm does not permit its employees to perform their services at any location, under its control, where segregated facilities are maintained. The firm agrees that a breach of this certification is a violation of the EEO provisions of this contract. The firm further certifies that no employee will be denied access to adequate facilities on the basis of sex or disability.

b. As used in this certification, the term "segregated facilities" means any waiting rooms, work areas, restrooms and washrooms, restaurants and other eating areas, timeclocks, locker rooms, and other storage or dressing areas, parking lots, drinking fountains, recreation or entertainment areas, transportation, and housing facilities provided for employees which are segregated by explicit directive, or are, in fact, segregated on the basis of race, color, religion, national origin, age or disability, because of habit, local custom, or otherwise. The only exception will be for the disabled when the demands for accessibility override (e.g. disabled parking).

c. The contractor agrees that it has obtained or will obtain identical certification from proposed subcontractors or material suppliers prior to award of subcontracts or consummation of material supply agreements of $10,000 or more and that it will retain such certifications in its files.

IV. **PAYMENT OF PREDETERMINED MINIMUM WAGE**

(Applicable to all Federal-aid construction contracts exceeding $2,000 and to all related subcontracts, except for projects located on roadways classified as local roads or rural minor collectors, which are exempt.)

1. **General:**

a. All mechanics and laborers employed or working upon the site of the work will be paid unconditionally and not less often than once a week and without subsequent deduction or rebate on any account [except such payroll deductions as are permitted by regulations (29 CFR 3) issued by the Secretary of Labor under the Copeland Act (40 U.S.C. 276c)] the full amounts of wages and bona fide fringe benefits (or cash equivalents thereof) due at time of payment. The payment shall be computed at wage rates not less than those contained in the wage determination of the Secretary of Labor (hereinafter "the wage determination") which is attached hereto and made a part hereof, regardless of any contractual relationship which may be alleged to exist between the contractor or its subcontractors and such laborers and mechanics. The wage determination (including any additional classifications and wage rates conformed under paragraph 2 of this Section IV and the DOL poster (WH-1321) or Form FHWA-1495) shall be posted at all times by the contractor and its subcontractors at the site of the work in a prominent and accessible place where it can be easily seen by the workers. For the purpose of this Section, contributions made or costs reasonably anticipated for bona fide fringe benefits under Section 1(b)(2) of the Davis-Bacon Act (40 U.S.C. 276a) on behalf of laborers or mechanics are considered wages paid to such laborers or mechanics, subject to the provisions of Section IV, paragraph 3b, hereof. Also, for the purpose of this Section, regular contributions made or costs incurred for more than a weekly period (but not less often than quarterly) under plans, funds, or programs, which cover the particular weekly period, are deemed to be constructively made or incurred during such weekly period. Such laborers and mechanics shall be paid the appropriate wage rate and fringe benefits on the wage determination for the classification of work actually performed, without regard to skill, except as provided in paragraphs 4 and 5 of this Section IV.

b. Laborers or mechanics performing work in more than one classification may be compensated at the rate specified for each classification for the time actually worked therein, provided, that the employer's payroll records accurately set forth the time spent in each classification in which work is performed.

c. All rulings and interpretations of the Davis-Bacon Act and related acts contained in 29 CFR 1, 3, and 5 are herein incorporated by reference in this contract.

2. **Classification:**

a. The SHA contracting officer shall require that any class of laborers or mechanics employed under the contract, which is not listed in the wage determination, shall be classified in conformance with the wage determination.

b. The contracting officer shall approve an additional classification, wage rate and fringe benefits only when the following criteria have been met:

1. the work to be performed by the additional classification requested is not performed by a classification in the wage determination;

2. the additional classification is utilized in the area by the construction industry;

3. the proposed wage rate, including any bona fide fringe benefits, bears a reasonable relationship to the wage rates contained in the wage determination; and

4. with respect to helpers, when such a classification prevails in the area in which the work is performed.

c. If the contractor or subcontractors, as appropriate, the laborers and mechanics (if known) to be employed in the additional classification or their representatives, and the contracting officer agree on the classification and wage rate (including the amount designated for fringe benefits where appropriate), a report of the action taken shall be sent by the contracting officer to the DOL, Administrator of the Wage and Hour Division, Employment Standards Administration, Washington, D.C. 20210. The Wage and Hour Administrator, or an authorized representative, will approve, modify, or disapprove every additional classification action within 30 days of receipt and so advise the contracting officer or will notify the contracting officer within the 30-day period that additional time is necessary.

d. In the event the contractor or subcontractors, as appropriate, the laborers or mechanics to be employed in the additional classification or their representatives, and the contracting officer do not agree on the proposed classification and wage rate (including the amount designated for fringe benefits, where appropriate), the contracting officer shall refer the questions, including the views of all interested parties and the recommendation of the contracting officer, to the Wage and Hour Administrator for determination. Said Administrator, or an authorized representative, will issue a determination within 30 days of receipt and so advise the contracting officer or will notify the contracting officer within the 30-day period that additional time is necessary

e. The wage rate (including fringe benefits where appropriate) determined pursuant to paragraph 2c or 2d of this Section IV shall be paid to all workers performing work in the additional classification from the first day on which work is performed in the classification.

3. **Payment of Fringe Benefits:**

a. Whenever the minimum wage rate prescribed in the contract for a class of laborers or mechanics includes a fringe benefit which is not expressed as an hourly rate, the contractor or subcontractors, as appropriate, shall either pay the benefit as stated in the wage determination or shall pay another bona fide fringe benefit or an hourly case equivalent thereof.

b. If the contractor or subcontractor, as appropriate, does not make payments to a trustee or other third person, he/she may consider as a part of the wages of any laborer or mechanic the amount of any costs reasonably anticipated in providing bona fide fringe benefits under a plan or program, provided, that the Secretary of Labor has found, upon the written request of the contractor, that the applicable standards of the Davis-Bacon Act have been met. The Secretary of Labor may require the contractor to set aside in a separate account assets for the meeting of obligations under the plan or program.

4. **Apprentices and Trainees (Programs of the U.S. DOL) and Helpers:**

a. Apprentices:

1. Apprentices will be permitted to work at less than the predetermined rate for the work they performed when they are employed pursuant to and individually registered in a bona fide apprenticeship program registered with the DOL, Employment and Training Administration, Bureau of Apprenticeship and Training, or with a State apprenticeship agency recognized by the Bureau, or if a person is employed in his/her first 90 days of probationary employment as an apprentice in such an apprenticeship program, who is not individually registered in the program, but who has been certified by the Bureau of Apprenticeship and Training or a State apprenticeship agency (where appropriate) to be eligible for probationary employment as an apprentice.

2. The allowable ratio of apprentices to journeyman-level employees on the job site in any craft classification shall not be greater than the ratio permitted to the contractor as to the entire work force under the registered program. Any employee listed on a payroll at an apprentice wage rate, who is not registered or otherwise employed as stated above, shall be paid not less than the applicable wage rate listed in the wage determination for the classification of work actually performed. In addition, any apprentice performing work on the job site in excess of the ratio permitted under the registered program shall be paid not less than the applicable wage rate on the wage determination for the work actually performed. Where a contractor or subcontractor is performing construction on a project in a locality other than that in which its program is registered, the ratios and wage rates (expressed in percentages of the journeyman-level hourly rate) specified in the contractor's or subcontractor's registered program shall be observed.

3. Every apprentice must be paid at not less than the rate specified in the registered program for the apprentice's level of progress, expressed as a percentage of the journeyman-level hourly rate specified in the applicable wage determination. Apprentices shall be paid fringe benefits in accordance with the provisions of the apprenticeship program. If the apprenticeship program does not specify fringe benefits, apprentices must be paid the full amount of fringe benefits listed on the wage determination for the applicable classification. If the Administrator for the Wage and Hour Division determines that a different practice prevails for the applicable apprentice classification, fringes shall be paid in accordance with that determination.

4. In the event the Bureau of Apprenticeship and Training, or a State apprenticeship agency recognized by the Bureau, withdraws approval of an apprenticeship program, the contractor or subcontractor will no longer be permitted to utilize apprentices at less than the applicable predetermined rate for the comparable work performed by regular employees until an acceptable program is approved.

b. Trainees:

1. Except as provided in 29 CFR 5.16, trainees will not be permitted to work at less than the predetermined rate for the work performed unless they are employed pursuant to and individually registered in a program which has received prior approval, evidenced by formal certification by the DOL, Employment and Training Administration.

2. The ratio of trainees to journeyman-level employees on the job site shall not be greater than permitted under the plan approved by the Employment and Training Administration. Any employee listed on the payroll at a trainee rate who is not registered and participating in a training plan approved by the Employment and Training Administration shall be paid not less than the applicable wage rate on the wage determination for the classification of work actually performed. In addition, any trainee performing work on the job site in excess of the ratio permitted under the registered program shall be paid not less than the applicable wage rate on the wage determination for the work actually performed.

3. Every trainee must be paid at not less than the rate specified in the approved program for his/her level of progress, expressed as a percentage of the journeyman-level hourly rate specified in the applicable wage determination. Trainees shall be paid fringe benefits in accordance with the provisions of the trainee program. If the trainee program does not mention fringe benefits, trainees shall be paid the full amount of fringe benefits listed on the wage determination unless the Administrator of the Wage and Hour Division determines that there is an apprenticeship program associated with the corresponding journeyman-level wage rate on the wage determination which provides for less than full fringe benefits for apprentices, in which case such trainees shall receive the same fringe benefits as apprentices.

4. In the event the Employment and Training Administration withdraws approval of a training program, the contractor or subcontractor will no longer be permitted to utilize trainees at less than the applicable predetermined rate for the work performed until an acceptable program is approved.

c. Helpers:

Helpers will be permitted to work on a project if the helper classification is specified and defined on the applicable wage determination or is approved pursuant to the conformance procedure set forth in Section IV.2. Any worker listed on a payroll at a helper wage rate, who is not a helper under a approved definition, shall be paid not less than the applicable wage rate on the wage determination for the classification of work actually performed.

5. **Apprentices and Trainees (Programs of the U.S. DOT):**

Apprentices and trainees working under apprenticeship and skill training programs which have been certified by the Secretary of Transportation as promoting EEO in connection with Federal-aid highway construction programs are not subject to the requirements

of paragraph 4 of this Section IV. The straight time hourly wage rates for apprentices and trainees under such programs will be established by the particular programs. The ratio of apprentices and trainees to journeymen shall not be greater than permitted by the terms of the particular program.

6. **Withholding:**

The SHA shall upon its own action or upon written request of an authorized representative of the DOL withhold, or cause to be withheld, from the contractor or subcontractor under this contract or any other Federal contract with the same prime contractor, or any other Federally-assisted contract subject to Davis-Bacon prevailing wage requirements which is held by the same prime contractor, as much of the accrued payments or advances as may be considered necessary to pay laborers and mechanics, including apprentices, trainees, and helpers, employed by the contractor or any subcontractor the full amount of wages required by the contract. In the event of failure to pay any laborer or mechanic, including any apprentice, trainee, or helper, employed or working on the site of the work, all or part of the wages required by the contract, the SHA contracting officer may, after written notice to the contractor, take such action as may be necessary to cause the suspension of any further payment, advance, or guarantee of funds until such violations have ceased.

7. **Overtime Requirements:**

No contractor or subcontractor contracting for any part of the contract work which may require or involve the employment of laborers, mechanics, watchmen, or guards (including apprentices, trainees, and helpers described in paragraphs 4 and 5 above) shall require or permit any laborer, mechanic, watchman, or guard in any workweek in which he/she is employed on such work, to work in excess of 40 hours in such workweek unless such laborer, mechanic, watchman, or guard receives compensation at a rate not less than one-and-one-half times his/her basic rate of pay for all hours worked in excess of 40 hours in such workweek.

8. **Violation:**

Liability for Unpaid Wages; Liquidated Damages: In the event of any violation of the clause set forth in paragraph 7 above, the contractor and any subcontractor responsible thereof shall be liable to the affected employee for his/her unpaid wages. In addition, such contractor and subcontractor shall be liable to the United States (in the case of work done under contract for the District of Columbia or a territory, to such District or to such territory) for liquidated damages. Such liquidated damages shall be computed with respect to each individual laborer, mechanic, watchman, or guard employed in violation of the clause set forth in paragraph 7, in the sum of $10 for each calendar day on which such employee was required or permitted to work in excess of the standard work week of 40 hours without payment of the overtime wages required by the clause set forth in paragraph 7.

9. **Withholding for Unpaid Wages and Liquidated Damages:**

The SHA shall upon its own action or upon written request of any authorized representative of the DOL withhold, or cause to be withheld, from any monies payable on account of work performed by the contractor or subcontractor under any such contract or any other Federal contract with the same prime contractor, or any other Federally-assisted contract subject to the Contract Work Hours and Safety Standards Act, which is held by the same prime contractor, such sums as may be determined to be necessary to satisfy any liabilities of such contractor or subcontractor for unpaid wages and liquidated damages as provided in the clause set forth in paragraph 8 above.

V. **STATEMENTS AND PAYROLLS**

(Applicable to all Federal-aid construction contracts exceeding $2,000 and to all related subcontracts, except for projects located on roadways classified as local roads or rural collectors, which are exempt.)

1. **Compliance with Copeland Regulations (29 CFR 3):**

The contractor shall comply with the Copeland Regulations of the Secretary of Labor which are herein incorporated by reference.

2. **Payrolls and Payroll Records:**

a. Payrolls and basic records relating thereto shall be maintained by the contractor and each subcontractor during the course of the work and preserved for a period of 3 years from the date of completion of the contract for all laborers, mechanics, apprentices, trainees, watchmen, helpers, and guards working at the site of the work.

b. The payroll records shall contain the name, social security number, and address of each such employee; his or her correct classification; hourly rates of wages paid (including rates of contributions or costs anticipated for bona fide fringe benefits or cash equivalent thereof the types described in Section 1(b)(2)(B) of the Davis Bacon Act); daily and weekly number of hours worked; deductions made; and actual wages paid. In addition, for Appalachian contracts, the payroll records shall contain a notation indicating whether the employee does, or does not, normally reside in the labor area as defined in Attachment A, paragraph 1. Whenever the Secretary of Labor, pursuant to Section IV, paragraph 3b, has found that the wages of any laborer or mechanic include the amount of any costs reasonably anticipated in providing benefits under a plan or program described in Section 1(b)(2)(B) of the Davis Bacon Act, the contractor and each subcontractor shall maintain records which show that the commitment to provide such benefits is enforceable, that the plan or program is financially responsible, that the plan or program has been communicated in writing to the laborers or mechanics affected, and show the cost anticipated or the actual cost incurred in providing benefits. Contractors or subcontractors employing apprentices or trainees under approved programs shall maintain written evidence of the registration of apprentices and trainees, and ratios and wage rates prescribed in the applicable programs.

c. Each contractor and subcontractor shall furnish, each week in which any contract work is performed, to the SHA resident engineer a payroll of wages paid each of its employees (including apprentices, trainees, and helpers, described in Section IV, paragraphs 4 and 5, and watchmen and guards engaged on work during the preceding weekly payroll period). The payroll submitted shall set out accurately and completely all of the information required to be maintained under paragraph 2b of this Section V. This information may be submitted in any form desired. Optional Form WH-347 is available for this purpose and may be purchased from the Superintendent of Documents (Federal stock number 029-005-0014-1), U.S. Government Printing

Office, Washington, D.C. 20402. The prime contractor is responsible for the submission of copies of payrolls by all subcontractors.

d. Each payroll submitted shall be accompanied by a "Statement of Compliance," signed by the contractor or subcontractor or his/her agent who pays or supervises the payment of the persons employed under the contract and shall certify the following:

1. that the payroll for the payroll period contains the information required to be maintained under paragraph 2b of this Section V and that such information is correct and complete;

2. that such laborer or mechanic (including each helper, apprentice, and trainee) employed on the contract during the payroll period has been paid the full weekly wages earned, without rebate, either directly or indirectly, and that no deductions have been made either directly or indirectly from the full wages earned, other than permissible deductions as set forth in the Regulations, 29 CFR 3;

3. that each laborer or mechanic has been paid not less that the applicable wage rate and fringe benefits or cash equivalent for the classification of worked performed, as specified in the applicable wage determination incorporated into the contract.

e. The weekly submission of a properly executed certification set forth on the reverse side of Optional Form WH-347 shall satisfy the requirement for submission of the "Statement of Compliance" required by paragraph 2d of this Section V.

f. The falsification of any of the above certifications may subject the contractor to civil or criminal prosecution under 18 U.S.C. 1001 and 31 U.S.C. 231.

g. The contractor or subcontractor shall make the records required under paragraph 2b of this Section V available for inspection, copying, or transcription by authorized representatives of the SHA, the FHWA, or the DOL, and shall permit such representatives to interview employees during working hours on the job. If the contractor or subcontractor fails to submit the required records or to make them available, the SHA, the FHWA, the DOL, or all may, after written notice to the contractor, sponsor, applicant, or owner, take such actions as may be necessary to cause the suspension of any further payment, advance, or guarantee of funds. Furthermore, failure to submit the required records upon request or to make such records available may be grounds for debarment action pursuant to 29 CFR 5.12.

VI. **RECORD OF MATERIALS, SUPPLIES, AND LABOR THIS SECTION DELETED JUNE 4, 2007.**

VII. **SUBLETTING OR ASSIGNING THE CONTRACT**

1. The contractor shall perform with its own organization contract work amounting to not less than 30 percent (or a greater percentage if specified elsewhere in the contract) of the total original contract price, excluding any specialty items designated by the State. Specialty items may be performed by subcontract and the amount of any such specialty items performed may be deducted from the total original contract price before computing the amount of work required to be performed by the contractor's own organization (23 CFR 635).

a. "Its own organization" shall be construed to include only workers employed and paid directly by the prime contractor and equipment owned or rented by the prime contractor, with or without operators. Such term does not include employees or equipment of a subcontractor, assignee, or agent of the prime contractor.

b. "Specialty Items" shall be construed to be limited to work that requires highly specialized knowledge, abilities, or equipment not ordinarily available in the type of contracting organizations qualified and expected to bid on the contract as a whole and in general are to be limited to minor components of the overall contract.

2. The contract amount upon which the requirements set forth in paragraph 1 of Section VII is computed includes the cost of material and manufactured products which are to be purchased or produced by the contractor under the contract provisions.

3. The contractor shall furnish (a) a competent superintendent or supervisor who is employed by the firm, has full authority to direct performance of the work in accordance with the contract requirements, and is in charge of all construction operations (regardless of who performs the work) and (b) such other of its own organizational resources (supervision, management, and engineering services) as the SHA contracting officer determines is necessary to assure the performance of the contract.

4. No portion of the contract shall be sublet, assigned or otherwise disposed of except with the written consent of the SHA contracting officer, or authorized representative, and such consent when given shall not be construed to relieve the contractor of any responsibility for the fulfillment of the contract. Written consent will be given only after the SHA has assured that each subcontract is evidenced in writing and that it contains all pertinent provisions and requirements of the prime contract.

VIII. **SAFETY: ACCIDENT PREVENTION**

1. In the performance of this contract the contractor shall comply with all applicable Federal, State, and local laws governing safety, health, and sanitation (23 CFR 635). The contractor shall provide all safeguards, safety devices and protective equipment and take any other needed actions as it determines, or as the SHA contracting officer may determine, to be reasonably necessary to protect the life and health of employees on the job and the safety of the public and to protect property in connection with the performance of the work covered by the contract.

2. It is a condition of this contract, and shall be made a condition of each subcontract, which the contractor enters into pursuant to this contract, that the contractor and any subcontractor shall not permit any employee, in performance of the contract, to work in surroundings or under conditions which are unsanitary, hazardous or dangerous to his/her health or safety, as determined under construction safety and health standards (29 CFR 1926) promulgated by the Secretary of Labor, in accordance with Section 107 of the Contract Work Hours and Safety Standards Act (40 U.S.C. 333).

3. Pursuant to 29 CFR 1926.3, it is a condition of this contract that the Secretary of Labor or authorized representative thereof, shall have right of entry to any site of contract performance to inspect or investigate the matter of compliance with the construction safety

and health standards and to carry out the duties of the Secretary under Section 107 of the Contract Work Hours and Safety Standards Act (40 U.S.C. 333).

IX. **FALSE STATEMENTS CONCERNING HIGHWAY PROJECTS**

In order to assure high quality and durable construction in conformity with approved plans and specifications and a high degree of reliability on statements and representations made by engineers, contractors, suppliers, and workers on Federal-aid highway projects, it is essential that all persons concerned with the project perform their functions as carefully, thoroughly, and honestly as possible. Willful falsification, distortion, or misrepresentation with respect to any facts related to the project is a violation of Federal law. To prevent any misunderstanding regarding the seriousness of these and similar acts, the following notice shall be posted on each Federal-aid highway project (23 CFR 635) in one or more places where it is readily available to all persons concerned with the project:

NOTICE TO ALL PERSONNEL ENGAGED ON FEDERAL-AID HIGHWAY PROJECTS

18 U.S.C. 1020 reads as follows:

"Whoever, being an officer, agent, or employee of the United States, or of any State or Territory, or whoever, whether a person, association, firm, or corporation, knowingly makes any false statement, false representation, or false report as to the character, quality, quantity, or cost of the material used or to be used, or the quantity or quality of the work performed or to be performed, or the cost thereof in connection with the submission of plans, maps, specifications, contracts, or costs of construction on any highway or related project submitted for approval to the Secretary of Transportation; or

Whoever knowingly makes any false statement, false representation, false report or false claim with respect to the character, quality, quantity, or cost of any work performed or to be performed, or materials furnished or to be furnished, in connection with the construction of any highway or related project approved by the Secretary of Transportation; or

Whoever knowingly makes any false statement or false representation as to material fact in any statement, certificate, or report submitted pursuant to provisions of the Federal-aid Roads Act approved July 1, 1916, (39 Stat. 355), as amended and supplemented;

Shall be fined not more that $10,000 or imprisoned not more than 5 years or both."

X. **IMPLEMENTATION OF CLEAN AIR ACT AND FEDERAL WATER POLLUTION CONTROL ACT**

(Applicable to all Federal-aid construction contracts and to all related subcontracts of $100,000 or more.)

By submission of this bid or the execution of this contract, or subcontract, as appropriate, the bidder, Federal-aid construction contractor, or subcontractor, as appropriate, will be deemed to have stipulated as follows:

1. That any facility that is or will be utilized in the performance of this contract, unless such contract is exempt under the Clean Air Act, as amended (42 U.S.C. 1857 et seq., as amended by Pub.L. 91-604), and under the Federal Water Pollution Control Act, as amended (33 U.S.C. 1251 et seq., as amended by Pub.L. 92-500), Executive Order 11738, and regulations in implementation thereof (40 CFR 15) is not listed, on the date of contract award, on the U.S. Environmental Protection Agency (EPA) List of Violating Facilities pursuant to 40 CFR 15.20.
2. That the firm agrees to comply and remain in compliance with all the requirements of Section 114 of the Clean Air Act and Section 308 of the Federal Water Pollution Control Act and all regulations and guidelines listed thereunder.
3. That the firm shall promptly notify the SHA of the receipt of any communication from the Director, Office of Federal Activities, EPA, indicating that a facility that is or will be utilized for the contract is under consideration to be listed on the EPA List of Violating Facilities.
4. That the firm agrees to include or cause to be included the requirements of paragraph 1 through 4 of this Section X in every nonexempt subcontract, and further agrees to take such action as the government may direct as a means of enforcing such requirements.

XI. **CERTIFICATION REGARDING DEBARMENT, SUSPENSION, INELIGIBILITY AND VOLUNTARY EXCLUSION**

1. **Instructions for Certification - Primary Covered Transactions:**

(Applicable to all Federal-aid contracts - 49 CFR 29)

a. By signing and submitting this proposal, the prospective primary participant is providing the certification set out below.

b. The inability of a person to provide the certification set out below will not necessarily result in denial of participation in this covered transaction. The prospective participant shall submit an explanation of why it cannot provide the certification set out below. The certification or explanation will be considered in connection with the department or agency's determination whether to enter into this transaction. However, failure of the prospective primary participant to furnish a certification or an explanation shall disqualify such a person from participation in this transaction.

c. The certification in this clause is a material representation of fact upon which reliance was placed when the department or agency determined to enter into this transaction. If it is later determined that the prospective primary participant knowingly rendered an erroneous certification, in addition to other remedies available to the Federal Government, the department or agency may terminate this transaction for cause of default.

d. The prospective primary participant shall provide immediate written notice to the department or agency to whom this proposal is submitted if any time the prospective primary participant learns that its certification was erroneous when submitted or has become erroneous by reason of changed circumstances.

e. The terms "covered transaction," "debarred," "suspended," "ineligible," "lower tier covered transaction," "participant," "person," "primary covered transaction," "principal," "proposal," and "voluntarily excluded," as used in this clause, have the meanings set out in the Definitions and Coverage sections of rules implementing Executive Order 12549. You may contact the department or agency to which this proposal is submitted for assistance in obtaining a copy of those regulations.

f. The prospective primary participant agrees by submitting this proposal that, should the proposed covered transaction be entered into, it shall not knowingly enter into any lower tier covered transaction with a person who is debarred, suspended, declared ineligible, or voluntarily excluded from participation in this covered transaction, unless authorized by the department or agency entering into this transaction.

g. The prospective primary participant further agrees by submitting this proposal that it will include the clause titled "Certification Regarding Debarment, Suspension, Ineligibility and Voluntary Exclusion-Lower Tier Covered Transaction," provided by the department or agency entering into this covered transaction, without modification, in all lower tier covered transactions and in all solicitations for lower tier covered transactions.

h. A participant in a covered transaction may rely upon a certification of a prospective participant in a lower tier covered transaction that is not debarred, suspended, ineligible, or voluntarily excluded from the covered transaction, unless it knows that the certification is erroneous. A participant may decide the method and frequency by which it determines the eligibility of its principals. Each participant may, but is not required to, check the nonprocurement portion of the "Lists of Parties Excluded From Federal Procurement or Nonprocurement Programs" (Nonprocurement List) which is compiled by the General Services Administration.

i. Nothing contained in the foregoing shall be construed to require establishment of a system of records in order to render in good faith the certification required by this clause. The knowledge and information of participant is not required to exceed that which is normally possessed by a prudent person in the ordinary course of business dealings.

j. Except for transactions authorized under paragraph f of these instructions, if a participant in a covered transaction knowingly enters into a lower tier covered transaction with a person who is suspended, debarred, ineligible, or voluntarily excluded from participation in this transaction, in addition to other remedies available to the Federal Government, the department or agency may terminate this transaction for cause or default.

* * * * *

Certification Regarding Debarment, Suspension, Ineligibility and Voluntary Exclusion--Primary Covered Transactions

1. The prospective primary participant certifies to the best of its knowledge and belief, that it and its principals:

   a. Are not presently debarred, suspended, proposed for debarment, declared ineligible, or voluntarily excluded from covered transactions by any Federal department or agency;

   b. Have not within a 3-year period preceding this proposal been convicted of or had a civil judgement rendered against them for commission of fraud or a criminal offense in connection with obtaining, attempting to obtain, or performing a public (Federal, State or local) transaction or contract under a public transaction; violation of Federal or State antitrust statutes or commission of embezzlement, theft, forgery, bribery, falsification or destruction of records, making false statements, or receiving stolen property;

   c. Are not presently indicted for or otherwise criminally or civilly charged by a governmental entity (Federal, State or local) with commission of any of the offenses enumerated in paragraph 1b of this certification; and

   d. Have not within a 3-year period preceding this application/proposal had one or more public transactions (Federal, State or local) terminated for cause or default.

2. Where the prospective primary participant is unable to certify to any of the statements in this certification, such prospective participant shall attach an explanation to this proposal.

* * * * *

2. **Instructions for Certification - Lower Tier Covered Transactions:**

(Applicable to all subcontracts, purchase orders and other lower tier transactions of $25,000 or more - 49 CFR 29)

a. By signing and submitting this proposal, the prospective lower tier is providing the certification set out below.

b. The certification in this clause is a material representation of fact upon which reliance was placed when this transaction was entered into. If it is later determined that the prospective lower tier participant knowingly rendered an erroneous certification, in addition to other remedies available to the Federal Government, the department, or agency with which this transaction originated may pursue available remedies, including suspension and/or debarment.

c. The prospective lower tier participant shall provide immediate written notice to the person to which this proposal is submitted if at any time the prospective lower tier participant learns that its certification was erroneous by reason of changed circumstances.

d. The terms "covered transaction," "debarred," "suspended," "ineligible," "primary covered transaction," "participant," "person," "principal," "proposal," and "voluntarily excluded," as used in this clause, have the meanings set out in the Definitions and Coverage sections of rules implementing Executive Order 12549. You may contact the person to which this proposal is submitted for assistance in obtaining a copy of those regulations.

e. The prospective lower tier participant agrees by submitting this proposal that, should the proposed covered transaction be entered into, it shall not knowingly enter into any lower tier covered transaction with a person who is debarred, suspended, declared ineligible, or voluntarily excluded from participation in this covered transaction, unless authorized by the department or agency with which this transaction originated.

f. The prospective lower tier participant further agrees by submitting this proposal that it will include this clause titled "Certification Regarding Debarment, Suspension, Ineligibility and Voluntary Exclusion-Lower Tier Covered Transaction," without modification, in all lower tier covered transactions and in all solicitations for lower tier covered transactions.

g. A participant in a covered transaction may rely upon a certification of a prospective participant in a lower tier covered transaction that is not debarred, suspended, ineligible, or voluntarily excluded from the covered transaction, unless it knows that the certification is erroneous. A participant may decide the method and frequency by which it determines the eligibility of its principals. Each participant may, but is not required to, check the Nonprocurement List.

h. Nothing contained in the foregoing shall be construed to require establishment of a system of records in order to render in good faith the certification required by this clause. The knowledge and information of participant is not required to exceed that which is normally possessed by a prudent person in the ordinary course of business dealings.

i. Except for transactions authorized under paragraph e of these instructions, if a participant in a covered transaction knowingly enters into a lower tier covered transaction with a person who is suspended, debarred, ineligible, or voluntarily excluded from participation in this transaction, in addition to other remedies available to the Federal Government, the department or agency with which this transaction originated may pursue available remedies, including suspension and/or debarment.

* * * * *

Certification Regarding Debarment, Suspension, Ineligibility and Voluntary Exclusion--Lower Tier Covered Transactions:

1. The prospective lower tier participant certifies, by submission of this proposal, that neither it nor its principals is presently debarred, suspended, proposed for debarment, declared ineligible, or voluntarily excluded from participation in this transaction by any Federal department or agency.

2. Where the prospective lower tier participant is unable to certify to any of the statements in this certification, such prospective participant shall attach an explanation to this proposal.

* * * * *

XII. **CERTIFICATION REGARDING USE OF CONTRACT FUNDS FOR LOBBYING**

(Applicable to all Federal-aid construction contracts and to all related subcontracts which exceed $100,000 - 49 CFR 20)

1. The prospective participant certifies, by signing and submitting this bid or proposal, to the best of his or her knowledge and belief, that:

   a. No Federal appropriated funds have been paid or will be paid, by or on behalf of the undersigned, to any person for influencing or attempting to influence an officer or employee of any Federal agency, a Member of Congress, an officer or employee of Congress, or an employee of a Member of Congress in connection with the awarding of any Federal contract, the making of any Federal grant, the making of any Federal loan, the entering into of any cooperative agreement, and the extension, continuation, renewal, amendment, or modification of any Federal contract, grant, loan, or cooperative agreement.

   b. If any funds other than Federal appropriated funds have been paid or will be paid to any person for influencing or attempting to influence an officer or employee of any Federal agency, a Member of Congress, an officer or employee of Congress, or an employee of a Member of Congress in connection with this Federal contract, grant, loan, or cooperative agreement, the undersigned shall complete and submit Standard Form-LLL, "Disclosure Form to Report Lobbying," in accordance with its instructions.

2. This certification is a material representation of fact upon which reliance was placed when this transaction was made or entered into. Submission of this certification is a prerequisite for making or entering into this transaction imposed by 31 U.S.C. 1352. Any person who fails to file the required certification shall be subject to a civil penalty of not less than $10,000 and not more than $100,000 for each such failure.

3. The prospective participant also agrees by submitting his or her bid or proposal that he or she shall require that the language of this certification be included in all lower tier subcontracts, which exceed $100,000 and that all such recipients shall certify and disclose accordingly.

TRAINING SPECIAL PROVISIONS

This project special provision will not be applicable to those Design-Build Teams who have elected to participate in the NCDOT's *Alternative On-The-Job Training Program.* In the event the Design-Build Team is participating in the NCDOT's *Alternative On-The-Job Training Program*, the On-The-Job Training program of the Construction Unit, Contractual Services Section will certify that participation to the appropriate Highway Division and Resident Engineers.

This Training Special Provision supersedes subparagraph 7b of the Special Provision entitled "*Specific Equal Employment Opportunity Responsibilities,"* (Attachment 1), and is in implementation of 23 USC 140(a). As a part of the Design-Build Team's equal opportunity affirmative action program, training shall be provided as follows:

> The Design-Build Team shall provide on-the-job training aimed at developing full journey workers in the type of trade or classification involved. Preference shall be given to providing training in the following skilled work classifications:

Equipment Operators	Office Engineers
Truck Drivers	Estimators
Carpenters	Iron / Reinforcing Steel Workers
Concrete Finishers	Mechanics
Pipe Layers	Welders

The number of trainees to be trained under this contract will be as specified in the project special provisions included else where in the proposal form.

In the event that a Design-Build Team subcontracts a portion of the contract work, he shall determine how many, if any, of the trainees are to be trained by the subcontractor, provided, however, the Design-Build Team shall maintain the primary responsibility for meeting the training requirements imposed by this special provision and the subcontractor has an approved on-the-job training program. The Design-Build Team shall also insure that this training special provision is made applicable to such subcontract. Where feasible, 25 percent of apprentices or trainees in each occupation shall be in their first year of apprenticeship or training.

The number of trainees shall be distributed among the skilled work classifications on the basis of the Design-Build Team's needs and the availability of journey workers in the various classifications within a reasonable area of recruitment. Prior to commencing construction, the Design-Build Team shall submit to the NCTA for approval the number of trainees to be trained in each selected classification and the training program to be used. Furthermore, the Design-Build Team shall specify the starting time for training in each of the classifications on the form provided by the NCTA. That form shall be submitted by the Design-Build Team to the NCTA on or before the date of the pre-construction conference. The Design-Build Team will be credited for each trainee employed by him on the contract work who is currently enrolled or

becomes enrolled in an approved program and who receives training for at least 50 percent of the specific program requirement.

Training and upgrading of minorities and women toward journey worker_status is a primary objective of this Training Special Provision. Accordingly, the Design-Build Team shall make every effort to enroll minority trainees and women (e.g., by conducting systematic and direct recruitment through public and private resources likely to yield minority and women trainees) to the extent that such persons are available within a reasonable area of recruitment. The Design-Build Team will be responsible for demonstrating the steps he has taken in the pursuance thereof, prior to a determination as to whether the Design-Build Team is in compliance with this Training Special Provision. This training commitment is not intended, and shall not be used, to discriminate against any applicant for training, whether a member of a minority group or not.

No employee shall be employed as a trainee in any classification in which he has successfully completed a training course leading to journey worker_status or in which he has been employed as a journey worker. The Design-Build Team should satisfy this requirement by including appropriate questions in the employee application or by other suitable means. Regardless of the method used, the Design-Build Team's records should document the finding in each case.

The minimum length and type of training for each classification will be as established in the training program selected by the Design-Build Team and approved by the NCTA. NCTA shall approve a program if it is reasonably calculated to meet the equal employment opportunity obligations of the Design-Build Team and to qualify the average trainee for journey worker status in the classification concerned by the end of the training period. Furthermore, apprenticeship programs registered with the US Department of Labor, Bureau of Apprenticeship and Training, or with a State apprenticeship agency recognized by the US Department of Labor, Manpower Administration, Bureau of Apprenticeship and Training, shall also be considered acceptable provided it is being administered in a manner consistent with the equal employment obligations of Federal-Aid highway construction contracts. Approval or acceptance of a training program shall be obtained from the NCTA prior to commencing work on the classification covered by the program. It is the intention of these provisions that training be provided in the construction crafts rather than clerk-typist or secretarial-type positions. Training is permissible in lower level management positions such as office engineers, estimators, timekeepers, etc., where the training is provided and approved by the NCTA and the Federal Highway Administration. Some offsite training is permissible as long as the training is an integral part of an approved training program and does not comprise a significant part of the overall training.

It is normally expected that a trainee will begin his training on the project as soon as feasible after the start of work utilizing the skill involved and remain on the project as long as training opportunities exist in the work classification or until he has completed his training program. It is not required that all trainees be on board for the entire length of the contract. A Design-Build Team will have fulfilled his responsibilities under this training special provision if he has provided acceptable training to the number of trainees specified. The number trained shall be determined on the basis of the total number enrolled on the Design-Build Team for a significant period.

Trainees will be paid at least 60 percent of the appropriate minimum journey worker's rate specified in the contract for the first half of the training period, 75 percent for the third quarter of the training period, and 90 percent for the last quarter of the training period, unless apprentices or trainees in an approved existing program are enrolled as trainees on this project. In that case, the appropriate rates approved by the Departments of Labor or Transportation in connection with the existing program shall apply to all trainees being trained for the same classification who are covered by this Training Special Provision.

The Design-Build Team shall furnish the trainee a copy of the program he will be following providing the training. The Design-Build Team shall provide each trainee with a certificate showing the type and length of training satisfactorily completed.

The Design-Build Team will provide for maintenance of records and furnish periodic reports documenting his performance under this Training Special Provision.

GENERAL DECISION NC20080011 NC11

Z-12

Date: February 28, 2008

General Decision Number NC20080011

Superseded General Decision No. NC20070011

State: North Carolina

Construction Type: HIGHWAY

COUNTIES:

Alamance	Durham	Orange
Alexander	Forsyth	Randolph
Buncombe	Franklin	Rowan
Burke	Gaston	Stokes
Cabarrus	Guilford	Union
Catawba	Lincoln	Wake
Cumberland	Mecklenburg	Yadkin
Davidson	New Hanover	
Davie	Onslow	

HIGHWAY CONSTRUCTION PROJECTS (does not include tunnels, building structures in rest area projects, railroad construction, and, bascule, suspension and spandrel arch bridges, bridges designed for commercial navigation, and bridges involving marine construction, and other major bridges).

Modification Number	Publication Date
0	02/28/2008

SUNC1990-014 02/12/1990

	Rates	Fringes
CARPENTER	7.63	
CONCRETE FINISHER	7.52	
ELECTRICIAN	10.26	
IRONWORKERS (reinforcing)	9.76	
LABORER		
Common	5.85	
Asphalt Lay Down Man	5.85	
Asphalt Raker	6.14	
Form Setter (road)	8.57	
Mason (brick, block, stone)	7.44	
Pipe Layer	6.23	
Power Tool Operator	8.28	

POWER EQUIPMENT OPERATORS		
Asphalt Distributor	6.78	
Asphalt Paver	7.47	
Bulldozer	7.33	
Bulldozer (utility)	6.72	
Concrete Curb Machine	7.09	
Concrete Finishing Machine	7.85	
Concrete Paver	6.90	
Crane, Backhoe, Shovel & Dragline (over 1 yd)	8.16	
Crane, Backhoe, Shovel & Dragline(1 yd and under)	6.95	
Drill Operator	7.34	
Grade Checker	5.85	
Gradeall	8.38	
Greaseman	6.49	
Loader	7.09	
Mechanic	8.47	
Motor Grader (Fine Grade)	8.04	
Motor Grader(Rough Grade)	7.68	
Oiler	5.88	
Roller (Finisher)	6.70	
Roller (Rough)	5.85	
Scraper	6.63	
Screed Asphalt	7.09	
Stone Spreader	6.02	
Stripping Machine Operator	6.00	
Subgrade Machine	7.13	
Sweeper	5.85	
Tractor (Utility)	5.85	

TRUCK DRIVERS		
Trucks – Single Rear Axle	5.85	
Trucks – Multi Rear Axle	6.08	
Trucks – Heavy Duty	9.47	

WELDERS – Receive rate prescribed for craft performing operation to which welding is incidental.

Unlisted classifications needed for work not included within the scope of the classifications listed may be added after award only as provided in the labor standards contract clauses (29 CFR 5.5(a)(1)(ii)).

In the listing above, the "SU" designation means that rates listed under that identifier do not reflect collectively bargained wage and fringe benefit rates. Other designations indicate unions whose rates have been determined to be prevailing.

WAGE DETERMINATION APPEALS PROCESS

1.) Has there been an initial decision in the matter? This can be:

* an existing published wage determination
* a survey underlying a wage determination
* a Wage and Hour Division letter setting forth a position on a wage determination matter
* a conformance (additional classification and rate) ruling

On survey related matters, initial contact, including requests for summaries of surveys, should be with the Wage and Hour Regional Office for the area in which the survey was conducted because those Regional Offices have responsibility for the Davis-Bacon survey program. If the response from this initial contact is not satisfactory, then the process described in 2.) and 3.) should be followed.

With regard to any other matter not yet ripe for the formal process described here, initial contact should be with the Branch of Construction Wage Determinations. Write to:

Branch of Construction Wage Determinations
Wage and Hour Division
U. S. Department of Labor
200 Constitution Avenue, N.W.
Washington, D.C. 20210

2.) If the answer to the question in 1.) is yes, then an interested party (those affected by the action) can request review and reconsideration from the Wage and Hour Administrator (See 29 CFR Part 1.8 and 29 CFR Part 7). Write to:

Wage and Hour Administrator
U.S. Department of Labor
200 Constitution Avenue, N.W.
Washington, D.C. 20210

The request should be accompanied by a full statement of the interested party's position and by any information (wage payment data, project description, area practice material, etc.) that the requestor considers relevant to the issue.

3.) If the decision of the Administrator is not favorable, an interested party may appeal directly to the Administrative Review Board (formerly the Wage Appeals Board). Write to:

Administrative Review Board
U. S. Department of Labor
200 Constitution Avenue, N.W.
Washington, D.C. 20210

4.) All decisions by the Administrative Review Board are final.

END OF GENERAL DECISION

*** STANDARD SPECIAL PROVISIONS ***

DIVISION ONE OF NCDOT STANDARD SPECIFICATIONS

GENERAL REQUIREMENTS

SECTION 101
DEFINITIONS OF TERMS

101-1 GENERAL

Whenever the terms defined in this section are used in the contract, in any of the contract documents, or on the plans, the intended meaning of such terms shall be as defined in this section.

Throughout Division One of the NCDOT Standard Specifications, the term "Contractor" is replaced with "Design-Build Team", the term "Bidder" is replaced with "Proposer," the term "Bid" is replaced by "Price Proposal," the term "State Highway Administrator" is replaced by "North Carolina Turnpike Authority's Chief Engineer" and the phrase "lowest Responsible Bidder" is replaced with "responsible Proposer with the lowest adjusted price." The replacement of the above terms also does not apply when the terms are part of a phrase (e.g. bid bond, prime Contractor, total amount bid, etc.)

Additionally, throughout the NCDOT Standard Specifications, the terms "NCDOT", "Department", or other names as reference to the Department of Transportation, apply equally to the North Carolina Turnpike Authority (NCTA) and the terms "Board", "Board of Transportation", or other names as reference to the North Carolina Board of Transportation apply equally to the Board of the North Carolina Turnpike Authority. The Board of the North Carolina Turnpike Authority is herein referred to as the Authority Board.

101-2 ABBREVIATIONS

AAN _____American Association of Nurserymen
AAR _____Association of American Railroads
AASHTO ___American Association of State Highway and Transportation Officials
ACI _____American Concrete Institute
ADT _____Annual Average Daily Traffic
AED _____Associated Equipment Distributors
AGC _____Associated General Contractors of America
AIA _____American Institute of Architects
AISC _____American Institute of Steel Construction
AISI_____American Iron and Steel Institute
ANSI _____American National Standards Institute, Inc.
ARA _____American Railway Association
AREA _____American Railway Engineering Association
ASLA _____American Society of Landscape Architects
ASTM _____American Society for Testing and Materials
ATIS _____Alliance for Telecommunications Industry Solutions
AWG_____American Wire Gauge

AWWA _____American Water Works Association
AWS _____American Welding Society
AWPA_____American Wood Preserver's Association
CALTRANS TEES____California DOT Transportation Electrical Equipment Specifications
CRSI _____Concrete Reinforcing Steel Institute
DHV _____Design Hourly Volume
EEI _____Edison Electric Institute
EIA/TIA ____Electronics Industries Alliance/Telecommunications Industry Association
FHWA_____Federal Highway Administration, U.S. Department of Transportation
FSS _____Federal Specifications and Standards, General Services Administration
FTMS _____Federal Test Method Standard
GS _____General Statutes of North Carolina
IES_____Illuminating Engineering Society
IMSA_____International Municipal Signal Association
ITS_____Intelligent Transportation Systems
LED_____Light Emitting Diode
MIL _____Military Standard
MUTCD ____Manual of Uniform Traffic Control and North Carolina Supplement thereto
NEC_____National Electrical Code
NEMA_____National Electrical Manufacturers Association
NESC _____National Electrical Safety Code
NTPEP _____National Transportation Product Evaluation Program
RMS _____Root Mean Square
RUS CFR ___Rural Utilities Service & Code of Federal Regulations
SCTE_____Society of Cable Telecommunications Engineers
SPIB _____Southern Pine Inspection Bureau
SSPC _____ Society of Protective Coatings
UL _____Underwriters' Laboratories, Inc.

UV_____Ultraviolet

101-3 DEFINITIONS

ACT OF GOD

Events in nature so extraordinary that the history of climate variations and other conditions in the particular locality affords no reasonable warning of them.

ADDITIONAL WORK

Additional work is that which results from a change or alteration in the contract and for which there are contract unit prices in the original contract or an executed supplemental agreement.

ADMINISTRATOR

The State Highway Administrator.

ADVERTISEMENT

The public advertisement inviting Statements of Qualifications for the design and construction of specific projects.

AMOUNT BID

The amount bid for a particular item of work in a proposal.

ARTICLE

A primary numbered subdivision of a section of the standard specifications.

AWARD

The decision of the Authority Board to accept the Proposal of the responsible Proposer with the lowest adjusted price for work that is subject to the furnishing of payment and performance bonds, and such other conditions as may be otherwise provided by law, the Instructions to Proposers, the Request for Proposals, and these specifications.

BASE COURSE

That portion of the pavement structure of planned thickness placed immediately below the pavement or surface course.

BID (OR PRICE PROPOSAL)

The offer of a Proposer on the Request for Proposals furnished by the North Carolina Turnpike Authority to perform the work and to furnish the labor and materials at the prices quoted.

BID BOND OR BID DEPOSIT

The security furnished by the Proposer with his Price Proposal as guaranty that he will furnish the required bonds and execute such documents as may be required if his Price Proposal is accepted.

BIDDER (OR PROPOSER)

An individual, partnership, firm, corporation, LLC or joint venture formally submitting a Price Proposal for the work contemplated.

BOARD OF TRANSPORTATION

The Board created by the provisions of G.S. 143B-350 for the purpose of formulating policies and priorities for the Department of Transportation, and awarding all highway construction contracts.

BRIDGE

A structure including supports, erected over a depression or an obstruction such as water, highway, or railway, and having a track or passage way for carrying traffic or other moving loads and having a length measured along the center of the roadway of more than 20 feet between undercopings of end supports, spring lines of arches, or between extreme ends of openings for multiple reinforced concrete box structures.

Bridge Length: The length of a bridge structure is the overall length measured along the line of survey stationing back to back of backwalls of abutments, if present, otherwise end to end of the bridge floor.

Bridge Width: The clear width measured at right angles to the longitudinal centerline of the bridge between the bottom of curbs, guard timbers or face of parapets, or in the case of multiple height of curbs, between the bottoms of the lower risers.

CALENDAR DAY

A day shown on the calendar beginning and ending at midnight.

CHIEF ENGINEER

The Chief Engineer of the North Carolina Turnpike Authority acting directly or through his duly authorized representatives.

COMPLETION DATE

That date established as set forth in the contract or as revised by authorized extensions, by which it is required, established as that the work set forth in the contract be satisfactorily completed. When observation periods are required by the Specifications, they are not a part of the work to be completed by the completion date or intermediate contract times stated in the contract.

CONSTRUCTION EASEMENT

A right owned by the Department of Transportation or the North Carolina Turnpike Authority in a parcel of land owned by a third party outside the highway right of way for the purpose of containing construction that exceeds the right of way.

CONTRACT DOCUMENTS (OR CONTRACT)

The executed agreement between the North Carolina Turnpike Authority and the successful proposer, covering the performance of the work and the compensation therefor.

The term contract is all inclusive with reference to all written agreements affecting a contractual relationship and all documents referred to therein, and shall specifically include, but not be limited to the Request for Proposals, any addenda thereto, the Technical Proposal subject to the requirements of the other Contract Documents, the Price Proposal, the printed contract form and all exhibits thereto, the contract bonds, the plans and associated special provisions prepared by the Design-Build Team, the standard specifications and all supplemental specifications thereto, the scopes of work, standard special provisions and the project special provisions contained in the Request for Proposals, all Reference Documents, and all executed supplemental agreements, all of which shall constitute one instrument.

CONTRACT ITEM

A specifically described unit of work for which a unit or lump sum price is provided in the contract. Synonymous with *Pay Item*.

CONTRACT LUMP SUM PRICE

The amount bid for a lump sum item that has been submitted by the Design-Build Team in his proposal.

CONTRACT PAYMENT BOND

A bond furnished by the Design-Build Team and the corporate surety securing the payment of those furnishing labor, materials, and supplies for the construction of the project.

CONTRACT PERFORMANCE BOND

A bond furnished by the Design-Build Team and the corporate surety guaranteeing the performance of the contract.

CONTRACT TIME

The number of calendar days inclusive between the date of availability and the completion date, said dates being established as set forth in the special provisions, including authorized extensions to the completion date.

CONTRACT UNIT PRICE

The unit bid price for a unit item that has been submitted by the Design-Build Team in his proposal.

CONTRACTOR (OR DESIGN-BUILD TEAM)

The successful proposer to whom the contract has been awarded, and who has executed the contract and furnished acceptable contract bonds.

CULVERT

Any structure not classified as a bridge that provides an opening under the roadway.

CURRENT CONTROLLING OPERATION OR OPERATIONS

Any operation or operations, as determined by the Engineer, that if delayed would delay the completion of the project.

DATE OF AVAILABILITY

That date as may be set forth in the Request for Proposals, by which it is anticipated that the Contract will be executed and sufficient design efforts or work sites within the project limits will be available for the Design-Build Team to begin his controlling operations or design.

DEPARTMENT OR DEPARTMENT OF TRANSPORTATION

A principal department of the North Carolina Executive Branch that performs the functions of planning, design, construction, and maintenance of an integrated statewide transportation system.

DESIGN-BUILD

A form of contracting in which the successful proposer undertakes responsibility for both the design and construction of a project.

DESIGN-BUILD TEAM

An individual, partnership, joint venture, corporation or other legal entity entity that forms the team of the Proposer awarded the Contract and that furnishes the necessary design and construction services, whether by itself or through subcontracts.

DESIGN-BUILD PROPOSAL

A proposal to contract consisting of a separately sealed Technical Proposal and a separately sealed Price Proposal submitted in response to a Request for Proposals on a Design-Build project.

DRAINAGE EASEMENT

A right, owned by the Department of Transportation or the North Carolina Turnpike Authority, in a parcel of land owned by a third party outside the highway right of way, to construct and maintain ditches, channels, or structures for directing the course and flow of water outside the highway right of way.

EASEMENT

A property right to use or control real property of another.

ENGINEER

The Chief Engineer of the North Carolina Turnpike Authority acting directly or through a duly authorized representative, such representative acting within the scope of particular assigned duties.

EQUIPMENT

All machinery and equipment, together with the necessary supplies, tools, and apparatus for upkeep and maintenance, all of which are necessary for the proper construction and acceptable completion of the work.

EXTRA WORK

Work found necessary or desirable to complete fully the work as contemplated in the contract for which payment is not provided for by the contract unit or lump sum prices in the original contract. Extra work shall not be work that in the terms of the contract is incidental to work for which there is a contract price or work that payment is included in some other contract unit or lump sum price.

FINAL ACCEPTANCE DATE

That date on which all work set forth in the contract and work modified by the Engineer is satisfactorily completed excluding any observation periods not specifically made a part of the work by the specifications or special provisions.

FINAL ESTIMATE

The document that contains a final statement of all quantities and total dollar amount for each item of work performed during the life of the contract including any adjustments to those amounts made under the terms of the contract. The final statement will be titled The Final Estimate and will be the document utilized to document final payment to the Design-Build Team. Receipt of this document by the Design-Build Team will begin the time frame for filing of a verified claim with the Turnpike Authority as provided for in G.S. 136-29 of the General Statutes of North Carolina.

FINAL ESTIMATE ASSEMBLY

As constructed plans and other project records that establish the final statement of quantities to be paid and document work performed on the project.

FORCE ACCOUNT NOTICE

A written notice to the Design-Build Team that extra work ordered by the Engineer will be paid for as force account work.

FORCE ACCOUNT WORK

Work that is paid for in accordance with Article 109-3 or on the basis of the force account formula provided in the contract.

HIGHWAY

A general term denoting a public way for purposes of vehicular travel, including the entire area within the right of way. Synonymous with Road and Street.

HOUR

One of the 24 equal parts of a day.

INSPECTOR

The authorized representative of the Engineer assigned to make a detailed inspection of any or all portions of the work and materials.

INTERMEDIATE COMPLETION DATE

That date established as set forth in the special provisions or as revised by authorized extensions, by which date it is required that the portion of work set forth in the contract be satisfactorily completed.

INTERMEDIATE COMPLETION TIME

The time established as set forth in the special provisions or as revised by authorized extensions, by which it is required that the portion of work set forth in the contract be satisfactorily completed.

INTERMEDIATE CONTRACT TIME (DAYS)

The number of calendar days inclusive between the date of availability and the completion date, said days being established as set forth in the special provisions, or as revised by authorized extensions, by which it is required that a portion of that work set forth in the contract be satisfactorily completed.

INTERMEDIATE CONTRACT TIME (HOURS)

The number of hours inclusive between the time of availability and the intermediate completion time, said times being established as set forth in the special provisions, including authorized extensions to the intermediate completion time.

INVERT

The lowest point in the internal cross section of a pipe or other culvert.

INVITATION TO BID

The notification that Technical Proposals and Price Proposals will be received for the construction of specific projects.

LABORATORY

The testing laboratory of the Department of Transportation, Turnpike Authority, or any other testing laboratory that may be designated or approved by the Engineer.

LOCAL TRAFFIC

Traffic that must use the facility under construction in order to reach its destination.

MAJOR AND MINOR CONTRACT ITEMS

Major contract items are listed as such in the project special provisions. All other original contract items and extra work shall be considered as minor items.

MATERIALS

Any substances that may be incorporated into the construction of the project.

MEDIAN

The center section of a divided highway that separates the traffic lanes in one direction from the traffic lanes in the opposite direction.

MOBILIZATION

The work described in Article 800-1.

NORTH CAROLINA TURNPIKE AUTHORITY

A public agency of the State established pursuant to Article 6H, Chapter 136 of the North Carolina General Statutes to study, plan, develop, design, establish, purchase, construct, operate and maintain turnpike projects across the State.

NORTH CAROLINA TURNPIKE AUTHORITY BOARD (AUTHORITY BOARD)

The Board established pursuant to GS 136.89.182 for the purpose of formulating policies and priorities of the North Carolina Turnpike Authority and awarding contracts, including construction contracts, necessary to implement a turnpike program across the State.

NOTICE TO PROCEED

The notice provided by the Turnpike Authority after which the Design-Build Team is authorized to begin certain preconstruction or construction activities as outlined in the Notice to Proceed. Notice to Proceed is often associated with a pre-determined date and is synonymous with Date of Availability.

PAVEMENT STRUCTURE

The combination of base and surface courses placed on a subgrade to support the traffic load and distribute it to the roadbed.

PAY ITEM

Synonymous with Contract Item.

PLANS

The project plans, Standard Drawings, working drawings and supplemental drawings, or reproductions thereof, accepted by the Engineer, which show the location, character, dimensions and details of the work to be performed.

(A) Standard Drawings:

Drawings approved for repetitive use, showing details to be used where appropriate. All Standard Drawings approved by the Department or the Turnpike Authority plus subsequent revisions and additions. Standard Drawings are available for purchase from:

Randy A. Garris, PE
State Contract Officer
1591 Mail Service Center
Raleigh, NC 27699-1591

(B) Preliminary Plans:

Drawings furnished by the Department or the Turnpike Authority included along with a Request for Proposals, or as developed by the Design-Build Team.

(C) Project Plans:

Construction drawings prepared, sealed and completed by the Design-Build Team, or as provided by the Department, that contain specific details and dimensions peculiar to the work.

(D) Release for Construction Plans

Those Project Plans that are conveyed to the field for the purpose of construction. These plans are stamped "RFC" by the Design-Build Team once all NCTA comments are addressed to the satisfaction of the NCTA.

(E) Working Drawings and Supplemental Drawings:

Supplemental design sheets, shop drawings, or similar data which the Design-Build Team is required to submit to the Engineer.

(F) As-Constructed Drawings:

Coordinately correct final drawings prepared by the Design-Build Team, documenting the details and dimensions of the completed work.

PREBID CONFERENCE

A conference held before Price Proposals are accepted on a project at which representatives of the Turnpike Authority will provide information, and accept and answer questions from interested parties.

PRICE PROPOSAL

The offer of a Proposer, submitted on the prescribed forms, to perform the work and furnish the labor and materials at the price quoted.

PROJECT

The specific section of the highway together with all appurtenances and construction to be performed thereon under the contract.

PROJECT SPECIAL PROVISIONS

Special provisions peculiar to the project and not otherwise thoroughly or appropriately set forth in the standard specifications or plans.

PROPOSAL (OR REQUEST FOR PROPOSALS)

The paper document provided by the Turnpike Authority that the Proposer uses to develop his paper offer to perform the work at designated bid prices.

PROPOSER

An individual, partnership, firm, corporation, LLC, or joint venture formally submitting a Technical Proposal and Price Proposal in response to a Request for Proposals.

PROVIDED MATERIALS

Those documents, engineering data, designs, drawings, etc, conveyed to the Proposers on the Reduced Candidate List during the course of the procurement process to aid the Proposer in the development of their Technical Proposal, Project design, and the construction of the Project.

REFERENCED DOCUMENTS

Those documents that are referenced within the other Contract Documents that provide additional design and construction requirements or standards that by reference are incorporated into the Contract.

RIGHT OF WAY

The land area shown on the plans as right of way within which the project is to be constructed.

ROAD

Synonymous with Highway and Street.

ROADBED

The graded portion of a highway usually considered as the area between the intersections of top and side slopes, upon which the base course, surface course, shoulders, and medians are constructed.

ROADSIDE

A general term denoting the area within the limits of the right of way adjoining the outer edge of the roadway. Extensive areas between the roadways of a divided highway may also be considered roadside.

ROADWAY

The portion of a highway within limits of construction.

SECTION

A numbered chapter of the standard specifications.

SHOULDER

The portion of the roadway adjacent to the traveled way for accommodation of stopped vehicles, for emergency use, and for lateral support of base and surface courses.

SIDEWALK

That portion of the roadway primarily constructed for pedestrian traffic.

SKEW ANGLE

The angle between the centerline of the project and the centerline of a pipe, culvert, bridge pier, bent, abutment, or other drainage feature, measured to the right of the project centerline facing in the direction of progressing stations.

SPECIAL PROVISIONS

Project special provisions and standard special provisions taken together as one body of special provisions.

SPECIFICATIONS

The general term comprising all the directions, provisions, and requirements contained or referred to in the standard specifications, including the supplemental specifications, together with such additional directions, provisions, and requirements that may be added or adopted as special provisions.

STANDARD SPECIAL PROVISIONS

Special directions or requirements not otherwise thoroughly or appropriately set forth in the standard specifications and that are peculiar to a selected group of projects.

STANDARD SPECIFICATIONS

The general term comprising all the directions, provisions, and requirements contained or referred to in this book entitled Standard Specifications for Roads and Structures, and in any subsequent revisions or additions to such book that are issued under the title Supplemental Specifications.

STATE

The State of North Carolina.

STATION

A station, when used as a term of measurement, will be 100 linear feet measured horizontally. When used as a location, it will be a designated point on the project.

STREET

Synonymous with Highway and Road.

SUBCONTRACTOR

An individual, partnership, firm, joint venture, L.L.C. or corporation to whom the Design-Build Team, with the written consent of the Engineer, sublets any part of the contract.

SUBGRADE

That portion of the roadbed prepared as a foundation for the pavement structure including curb and gutter. On portions of projects that do not include the construction of a base course or pavement, the presence of the subgrade will not be recognized during the life of such contract.

SUBSTANTIAL COMPLETION

Completion of that portion of a contract, as defined in the Project Special Provision entitled "Substantial Completion", for which liquidated damages may be specified.

SUBSTRUCTURE

All of that part of the structure below the bearings of simple and continuous spans, spans, skew back of arches and tops of footings of rigid frames, together with the backwalls, and wingwalls.

SUCCESSFUL PROPOSER

The Proposer awarded a contract.

SUPERINTENDENT

The representative of the Design-Build Team authorized to supervise and direct the construction for the Design-Build Team and to receive and fulfill directions from the Engineer.

SUPERSTRUCTURE

All of the part of the structure exclusive of the substructure.

SUPPLEMENTAL AGREEMENT

A written agreement between the Design-Build Team and the Turnpike Authority covering amendments to the contract.

SUPPLEMENTAL SPECIFICATIONS

General revisions or additions to this book of standard specifications that are issued under the title of Supplemental Specifications, and that shall be considered as part of the standard specifications, or specifications, regulations, standards, or codes referenced in the contract.

SURETY

A corporate bonding company furnishing the bid bond or furnishing the contract payment and performance bonds.

TABLE OF QUANTITIES

A listing of work items (corresponding to the items in the Trns*port pay item list) that contributes to a project completion. The table shall include estimated quantities for each work item.

TECHNICAL PROPOSAL

A submittal from a Proposer, in accordance with requirements of the Instructions to Proposers and the Request for Proposals, for the purpose of final selection.

TEMPORARY CONSTRUCTION EASEMENT

A temporary right, owned by the Department of Transportation or the Turnpike Authority, in a parcel of land owned by a third party outside the highway right of way, for the use of the Department of Transportation or Turnpike Authority during the construction and that reverts to the third party on completion of construction.

THROUGH TRAFFIC

Traffic that can reach its destination by a route or routes other than the facility under construction.

TOTAL AMOUNT BID

Same as total price bid. The total amount bid will be considered to be the correct sum total obtained by adding together the amounts bid for every item in the proposal other than items which are authorized alternates to those items for which an amount bid has been established.

UNBALANCED BID

A Price Proposal that includes any unbalanced bid price.

UNBALANCED BID PRICE

A unit or lump sum bid price that does not reflect reasonable actual costs that the proposer anticipates for the performance of the item in question along with a reasonable proportionate share of the proposer's anticipated profit, overhead costs, and other indirect costs.

UNLIMITED NOTICE TO PROCEED

The Notice to Proceed that authorizes all Work required by the Contract Documents.

WORK

Work shall mean the furnishing of all labor, materials, equipment, and incidentals necessary or convenient to the successful completion of the project, or any part, portion, or phase thereof, and the carrying out of all duties and obligations imposed by the contract.

WORKING DRAWINGS

Stress sheets, shop drawings, erection drawings, falsework drawings, cofferdam drawings, catalog cuts, or any other supplementary drawings or similar data that the Design-Build Team is required to submit to the Engineer for review and/or approval.

SECTION 102
PROPOSAL REQUIREMENTS AND CONDITIONS

102-1 INVITATION TO BID

After the advertisement has been made, an invitation to bid will be mailed to known prequalified contractors and any other contracting firms, material suppliers, and other interested parties who have requested they be placed on the invitation to bid mailing list informing them that Design-Build Proposals will be received for the construction of specific projects. Such invitation will indicate the contract and project identification numbers, length, locations, and descriptions; a general summary of the items of work to be performed; and information on how to receive a Request for Qualifications. All projects will be advertised in daily newspapers throughout the state prior to the bid opening.

102-2 CONTRACTOR PREQUALIFICATION

Contractors desiring to perform work on NCTA projects shall prequalify with the Department of Transportation. Upon prequalification, Contractors will be placed on the Department of Transportation's Prequalified Bidders List and/or the Approved Subcontractors List, depending upon the application submitted. All requirements listed in Article 102-2(A) through Article 102-2(D) apply for working on NCTA projects. However, additional prequalification requirements may be dictated in the Request for Qualifications or Request for Proposals on a project specific basis. Additionally, Contractors may be precluded, with cause, from performing work on NCTA projects regardless of their status on the Department of Transportation's Prequalified Bidders List and/or Approved Subcontractors List.

(A) BIDDER PREQUALIFICATION

(1) Applicant shall submit a completed NCDOT Bidder Experience Questionnaire along with any additional supporting information requested by the Department, as noted in the Experience Questionnaire package. Additional requirements for prequalification will be set forth in the contract.

(2) Applicant shall demonstrate that he has sufficient ability and experience in related highway construction projects to perform the work specified in NCDOT contracts, including the type and dollar value of previous contracts.

(3) Applicant shall demonstrate a history of successful performance and completion of projects in a timely manner, subject to contract time adjustments.

(4) Applicant shall demonstrate the financial ability to furnish bonds as specified in G.S. 44A-26.

(5) Applicant shall demonstrate sufficient and readily available equipment to perform highway construction contracts in a timely manner.

(6) Applicant shall demonstrate sufficient available experienced personnel to perform highway construction contracts. The identities and qualifications of both management and labor work force shall be provided.

(7) Applicant shall provide names and addresses of persons for whom the firm has performed related work. Responses from the references shall be on Department of Transportation forms and shall be received by the Department prior to evaluating the request for prequalification.

(8) Applicant shall provide any information requested concerning the corporate and operational management structure of the company, the identity of persons or entities owning stock or other equity interest in the company, and the relationship between the applicant and any other company prequalified with the Department or applying for prequalification.

(9) Applicant shall demonstrate, at the time of application for prequalification, the financial capacity to successfully complete projects containing the work types they so designate.

(10) Applicant shall provide further information as may be required to determine that the firm is a responsible bidder.

(11) Applicant shall submit a completed Pre-bid Non-collusion Affidavit and Debarment Certification, in accordance with Article 102-10. These forms can be found on the Department's website.

(12) Applicant shall submit a completed Safety Index Rating Form with the Questionnaire and annually thereafter. Details regarding the Safety Index are discussed later in Article 102-2(C). This form may be obtained by contacting the State Contractual Services Engineer or from the Department's website.

Bidders shall renew annually and requalify every 3 years. See Article 102-2(D) Renewal / Requalification for details.

The Bidder Experience Questionnaire shall be completed in its entirety and signed by an officer of the firm. The officer's signature shall be notarized. In addition to submitting the Experience Questionnaire form as set forth above, the prospective bidder shall submit supporting information in a format of his choosing to address the requirements listed above.

The prospective proposer shall file all required statements and documents with the State Contractual Services Engineer no less than 4 weeks prior to a given letting for their Price Proposal to be considered. A Price Proposal shall not be opened unless all prequalification requirements have been met by the proposer and have been found acceptable by the Engineer.

(B) SUBCONTRACTOR PREQUALIFICATION

Contractors who have been approved to be placed on the Prequalified Bidders List as noted above may also perform work for the Department as a subcontractor and need not

apply further. Subcontractors will not be placed on the Prequalified Bidders List unless they submit through the Prequalification process.

(1) Applicant shall submit a completed NCDOT Subcontractor Experience Questionnaire along with any additional supporting information requested by the Department. Additional requirements for prequalification will be set forth in the contract.

(2) Applicant shall demonstrate sufficient ability and experience in related construction projects to perform the work specified in NCDOT contracts, including the type of previous contracts.

(3) Applicant shall demonstrate sufficient and readily available equipment to perform highway construction contracts in a timely manner.

(4) Applicant shall submit a completed Safety Index Rating Form with the Questionnaire and annually thereafter. Details regarding the Safety Index are discussed later in Subarticle 102-2(C). This form may be obtained by contacting the State Contractual Services Engineer or from the Department's website.

(5) Applicant shall provide further information as may be required.

Subcontractors shall renew annually and requalify every 3 years. See Subarticle 102-2(D) Renewal/Requalification for details.

Prospective subcontractors may request a NCDOT Subcontractor Experience Questionnaire and a Safety Index Rating Form from the State Contractual Services Engineer. The Safety Index Rating Form is included in the Subcontractor Experience Questionnaire and can also be found at the Department's website.

The Subcontractor Experience Questionnaire shall be completed in its entirety. In addition to submitting the Experience Questionnaire as set forth above, the prospective subcontractor shall submit supporting information in a format of their choosing to address the requirements listed above.

The prospective proposer shall file all required statements and documents with the State Contractual Services Engineer no less than 4 weeks prior to beginning work. A subcontractor will not be allowed to begin work until all prequalification requirements have been met by the subcontractor and have been found acceptable by the Engineer.

Upon determination by the Department that all prequalification requirements have been met, the applicant will be assigned a Vender Identification Number. This Number will thereafter be assigned to all applicants for prequalification or requalification which the Department determines are under sufficient common ownership and management control to warrant prequalification as a single entity. This determination by the Department shall be based on the information submitted with the Experience Questionnaire, annual review of indices, and any other information obtained by the Department.

(C) SAFETY INDEX

The Department will conduct a review of each firm's Safety Index. To be prequalified, each firm shall maintain a satisfactory safety index. An overall safety index equal to or greater than 60 is considered satisfactory. In addition, an index between 60 and 69 may be considered marginal and may result in an in-depth safety audit of a firm's safety

practices. An overall safety index equal to or less than 59 is considered unsatisfactory and will prohibit prequalification of new firms until said firms meet the requirements described below.

A score of 59 or less for requalifying firms will result in disciplinary action as follows. The Engineer may require the Contractor to state in writing the reason(s) for the unsatisfactory rating and produce such supporting data as may be necessary to evaluate the circumstances surrounding the rating. When the Contractor cannot provide justification to raise the unsatisfactory safety index, the Engineer may invoke one or more of the following sanctions:

(1) Removal of the firm from the Prequalified Bidders List and/or the Approved Subcontractors List

(2) Placement of the firm on probation for up to two years

(3) Auditing of the firm's safety practices

(4) Giving a written warning to correct any safety deficiencies

Firms not approved or disqualified to bid or perform subcontract work due to an unsatisfactory safety index will not be approved or reinstated to bid or perform subcontract work until they can provide adequate evidence that all safety deficiencies have been corrected to the satisfaction of the Engineer.

(D) RENEWAL AND REQUALIFICATION

Renewal of proposers shall occur annually on or before the firm's anniversary, which is based upon the prequalification expiration date. Renewal shall consist of submitting an updated Safety Index, any other required indices, and the non-collusion documents mentioned earlier in Subarticle 102-2(A). Price Proposals of firms who fail to submit these documents by their anniversary date will not be considered until such time as these documents are received and approved by the Engineer. The Engineer may also review performance related issues when considering proposers for renewal.

Renewal of subcontractors shall occur annually on or before the firm's anniversary, which is based upon the prequalification expiration date. Renewal shall consist of submitting an updated Safety Index and any other required indices. Subcontractors who fail to submit these documents by their anniversary date will not be allowed to begin work on any new contracts until these documents are received and approved by the Engineer.

Requalifying of bidders and subcontractors shall occur every 3 years. Those requalifying may request their respective NCDOT Experience Questionnaire form, a Safety Index Rating Form, and any other index rating forms from the State Contractual Services Engineer. Requalifying bidders shall also submit their non-collusion documents as shown in Subarticle 102-2(A). The Safety Index Rating Form is included in the Experience Questionnaire and can be found on the Department's website.

The requalifying contractor shall file all required statements and documents with the State Contractual Services Engineer no less than 4 weeks prior to a given letting for their Price Proposal to be considered. Following the expiration date, a Price Proposal will not be opened unless all requalification requirements have been met by the proposer and have

been found acceptable by the Engineer. Also, following the expiration date, a subcontractor may not begin any new work unless all prequalification requirements have been met by the subcontractor and have been found acceptable by the Engineer.

102-3 CONTENTS OF INSTRUCTIONS TO PROPOSERS AND RFP

An Instructions to Proposers document and the remainder of the Request for Proposals will be furnished by the Turnpike Authority to the selected proposers from among the respondents to the Request for Qualifications. Each Instructions to Proposers document and Request for Proposals will be marked on the front cover by the Turnpike Authority with an identifier of the Proposer to whom it is being furnished. The Instructions to Proposers and the remainder of the Request for Proposals will state the location of the project and will show a schedule of contract items for which Technical and Price Proposals are invited. These documents will set forth the date and time Technical and Price Proposals are to be submitted and will be opened. The Request for Proposals will also include any special provisions or requirements that vary from or are not contained in any preliminary plans design information or standard specifications.

The Request for Proposals will also include the printed contract forms and signature sheets for execution by both parties to the contract. In the event the Proposer is awarded the contract, execution of the Request for Proposals by the Proposer is considered the same as execution of the contract.

The plans, standard specifications, and other documents designated in the Instructions to Proposers document and the remainder of the Request for Proposals shall be considered a part of the Request for Proposals whether or not they are attached thereto. All papers bound with the proposal are necessary parts thereof and shall not be detached, taken apart, or altered.

The names and identity of each prospective Proposer that receives a copy of the Request for Qualifications for the purposes of submitting a Statement of Qualifications shall be made public, except that a potential Proposer who obtains a Request for Qualifications may, at the time of ordering, request that his name remain confidential.

Up to three copies of the Instructions to Proposers document and the remainder of the Request for Proposals will be furnished to each prospective Proposer. Additional copies may be purchased for the sum of $25 each. The copy marked with the Proposer's name and prequalification number shall be returned to the Turnpike Authority.

102-5 INTERPRETATION OF QUANTITIES IN PROPOSAL

The quantities appearing in the proposal are approximate only and are to be used for the comparison of bids. Payment to the Design-Build Team will be made in accordance with the terms of the contract.

When revisions in the plans are made by the Engineer that affect the quantities shown for lump sum items, adjustment in compensation may be made under the provisions of Article 104-8.

102-6 EXAMINATION OF PLANS, SPECIFICATIONS, CONTRACT, AND SITE OF WORK

The Proposer shall examine carefully the site of the work contemplated, the preliminary plans and specifications, the Instructions to Proposers document, and the remainder of the

Request for Proposals. The submission of a Technical Proposal and a Price Proposal shall be conclusive evidence that the Proposer has investigated and is satisfied as to the conditions to be encountered; as to the character, quality, and scope of work to be performed; the quantities of materials to be furnished; and as to the conditions and requirements of the proposed contract.

A proposer or Design-Build Team is cautioned to make such independent investigation and examination as he deems necessary to satisfy himself as to conditions to be encountered in the performance of the work and with respect to possible local material sources, the quality and quantity of material available from such property, and the type and extent of processing that may be required in order to produce material conforming to the requirements of the contract.

102-7 SUBSURFACE INVESTIGATION REPORT

The Subsurface Investigation and report was made for the purpose of information only.

If a subsurface investigation report is available on this project, a copy may be obtained by the prospective proposers upon request.

The subsurface investigation on which the report is based was made for the purpose of information only. The various field boring logs, rock cores, and soil test data available may be reviewed or inspected in Raleigh at the office of the Geotechnical Unit. Neither the subsurface investigation report nor the field boring logs, rock cores, or soil test data is part of the contract.

General soil and rock strata descriptions and indicated boundaries are based on a geotechnical interpretation of all available subsurface data and may not necessarily reflect the actual subsurface conditions between borings or between sampled strata within the borehole. The laboratory sample data and the in situ (in-place) test data can be relied on only to the degree of reliability inherent in the standard test method. The observed water levels or soil moisture conditions indicated in the subsurface investigations are as recorded at the time of the investigation. These water levels or soil moisture conditions may vary considerably with time according to climatic conditions including temperature, precipitation, and wind, as well as other non-climactic factors.

The Proposer is cautioned that details shown in the subsurface investigation report are preliminary only. The NCTA and the Department does not warrant or guarantee the sufficiency or accuracy of the investigation made, nor the interpretations made or opinions of the NCTA or the Department as to the type of materials and conditions that may be encountered. The Proposer is cautioned to make such independent subsurface investigations, as he deems necessary to satisfy himself as to conditions to be encountered on this project. The Design-Build Team shall have no claim for additional compensation or for an extension of time for any reason resulting from the actual conditions encountered at the site differing from those indicated in the subsurface investigation.

102-8 PREPARATION AND SUBMISSION OF PRICE PROPOSALS

All Price Proposals shall be prepared and submitted in accordance with the following requirements:

1. The Request for Proposals provided by the Turnpike Authority shall be used and shall not be taken apart or altered. The Price Proposal shall be submitted on the same form, which has been furnished to the Proposer by the Turnpike Authority as identified by the Proposer's name marked on the front cover by the Turnpike Authority.

2. All entries including signatures shall be written in ink.
3. The Proposer shall submit a lump sum or unit price for every item in the Price Proposal. The lump sum or unit prices bid for the various contract items shall be written in figures.
4. An amount bid shall be entered in the Request for Proposals for every item and the price shall be written in figures in the "Amount Bid" column in the Request for Proposals.
5. The total amount bid shall be written in figures in the proper place in the Request for Proposals. The total amount bid shall be determined by adding the amounts bid for each lump sum item.
6. Changes in any entry shall be made by marking through the entry in ink and making the correct entry adjacent thereto in ink. A representative of the Proposer shall initial the change in ink.
7. The Price Proposal shall be properly executed. In order to constitute proper execution, the Price Proposal shall be executed in strict compliance with the following:
    a. If a Price Proposal is by an individual, it shall show the name of the individual and shall be signed by the individual with the word "Individually" appearing under the signature. If the individual operates under a firm name, the bid shall be signed in the name of the individual doing business under the firm name.
    b. If the Price Proposal is by a corporation, it shall be executed in the name of the corporation by the President, Vice President, or Assistant Vice President. It shall be attested by the Secretary or Assistant Secretary. The seal of the corporation shall be affixed. If the Price Proposal is executed on behalf of a corporation in any other manner than as above, a certified copy of the minutes of the Board of Directors of said corporation authorizing the manner and style of execution and the authority of the person executing shall be attached to the Price Proposal or shall be on file with the Department.
    c. If the Price Proposal is made by a partnership, it shall be executed in the name of the partnership by one of the general partners.
    d. If the Price Proposal is made by a Limited Liability Company (LLC), it shall be signed by the manager and notarized.
    e. If the Price Proposal is made by a joint venture, it shall be executed by each of the joint venturers in the appropriate manner set out above. In addition, the execution by the joint venturers shall appear below their names.
    f. The Price Proposal execution shall be notarized by a notary public whose commission is in effect on the date of execution. Such notarization shall be applicable both to the Price Proposal and to the non-collusion affidavit which is part of the signature sheets.
8. The Price Proposal shall not contain any unauthorized additions, deletions, or conditional bids.
9. The Proposer shall not add any provision reserving the right to accept or reject an award, or to enter into a contract pursuant to an award.

10. The Price Proposal shall be accompanied by a bid bond on the form furnished by the Turnpike Authority or by a bid deposit. The bid bond shall be completely and properly executed in accordance with the requirements of Article 102-11. The bid deposit shall be a certified check or cashier check in accordance with Article 102-11.
11. The Price Proposal shall be placed in a sealed envelope and shall be delivered to and received by the Turnpike Authority prior to the time specified in the Instructions to Proposers.

102-9 BLANK

102-10 NON-COLLUSION AFFIDAVIT AND DEBARMEN CERTIFICATION

(A) General Prime contractors and lower tier participants in each transaction involving public funds shall execute a non-collusion certification and debarment certification. Transactions that require certifications from lower tier participants are:

(1) Transactions between a prime contractor and a person, other than for a procurement contract, for goods or services, regardless of type.

(2) Procurement contracts for goods and services, between a prime contractor and a person, regardless of type, expected to equal or exceed the Federal small purchase threshold fixed at 10 U.S.C. 2304(g) [currently twenty-five thousand dollars ($25,000)] under a prime contract.

(3) Procurement contracts for goods or services between a prime contractor and a person, regardless of the amount, under which that person will have a critical influence on or substantive control over the transaction. Such persons include, but are not limited to, bid estimators and contract managers.

The certifications for both the prime contractor and the lower tier participants shall be on a form furnished by the Department of Transportation to comply with Federal Highway Administration requirements, as published in 49 CFR Part 29. The prime contractor is responsible for obtaining the certifications from the lower tier participants and is responsible for keeping them as part of the contract records.

(B) Non-collusion Affidavit In compliance with applicable Federal and State laws and regulations, each and every proposer shall furnish the Turnpike Authority with an affidavit certifying that the proposer has not entered into any agreement, participated in any collusion, or otherwise taken any action in restraint of free competitive bidding in connection with his Price Proposal on the project. The affidavit shall also conclusively indicate that the proposer intends to do the work with its own bonafide employees or subcontractors and is not bidding for the benefit of another Design-Build Team.

(C) Debarment Certification In compliance with applicable Federal and State laws and regulations, each and every proposer shall furnish the Turnpike Authority with a debarment certification, stating that he is not debarred, or if he is debarred, an explanation shall be included. The explanation will not necessarily result in denial of participation in a contract. Failure to furnish a certification or an explanation will be grounds for rejection of a Price Proposal. If the prequalified proposer's status

changes, he shall immediately submit a new fully executed debarment certification with an explanation of the change.

Failure to have a fully executed non-collusion affidavit and debarment certification on file in the Contractual Services Office prior to submitting Price Proposals will cause those Price Proposals to be non-responsive.

(1) **Paper Bid** Execution of Bid, Noncollusion Affidavit and Debarment Certification forms will be included in the Request for Proposals as part of the signature sheets. Execution of the signature sheets will also constitute execution of the Price Proposal, non-collusion affidavit and the debarment certification. The signature sheets shall be notarized.

102-11 BID BOND OR BID DEPOSIT

Each Price Proposal shall be accompanied by a corporate bid bond or a bid deposit of a certified or cashiers check in the amount of at least 5% of the total amount bid for the contract. When a Price Proposal is secured by a bid deposit (certified check or cashiers check), the execution of a bid bond will not be required.

If the proposer has failed to meet all conditions of the bid bond and the Turnpike Authority has not received the amount due under the bid bond, the proposer may be disqualified from further bidding as provided in Article 102-16.

No Price Proposal will be considered or accepted unless accompanied by one of the foregoing securities. The bid bond shall be executed by a Corporate Surety licensed to do business in North Carolina and the certified check or cashiers check shall be drawn on a bank or trust company insured by the Federal Deposit Insurance Corporation and made payable to the *North Carolina Turnpike Authority* in an amount of at least 5% of the total amount bid for the contract. The condition of the bid bond or bid deposit is: the Proposer shall not withdraw within 120 days after the latest submission of the Technical and Price Proposal, and if the Authority Board shall award a contract to the Proposer, the Proposer shall within 14 calendar days after the notice of award is received by him give, payment and performance bonds with good and sufficient surety as required for the faithful performance of the contract and for the protection of all persons supplying labor and materials in the prosecution of the work; in the event of the failure of the Proposer to give such payment and performance bonds as required, then the amount of the bid bond shall be immediately paid to the North Carolina Turnpike Authority as liquidated damages, or, in the case of a bid deposit, the deposit shall be forfeited to the North Carolina Turnpike Authority.

Withdrawal of a Price Proposal due to a mistake made in the preparation of the Price Proposal, where permitted by Article 103-3, shall not constitute withdrawal of a Price Proposal as cause for payment of the bid bond or forfeiture of the bid deposit.

When a Price Proposal is secured by a bid bond, the bid bond shall be on the form furnished by the Turnpike Authority. The bid bond shall be executed by both the proposer and a Corporate Surety licensed under the laws of North Carolina to write such bonds. The execution by the proposer shall be in the same manner as required by Article 102-8 for the proper execution of the Price Proposal. The execution by the Corporate Surety shall be the same as is provided for by Article 102-8(A)(8)(b), for the execution of the Price Proposal by a corporation. The seal of the Corporate Surety shall be affixed to the bid bond. The bid bond form furnished is for execution of the Corporate Surety by a General Agent or Attorney in Fact. A certified copy of the Power

of Attorney shall be attached if the bid bond is executed by a General Agent or Attorney in Fact. The Power of Attorney shall contain a certification that the Power of Attorney is still in full force and effect as of the date of the execution of the bid bond by the General Agent or Attorney in Fact. If the bid bond is executed by the Corporate Surety by the President, Vice President, or Assistant Vice President, and attested to by the Secretary or Assistant Secretary, then the bid bond form furnished shall be modified for such execution, instead of execution by the Attorney in Fact or the General Agent.

102-12 DELIVERY OF TECHNICAL AND PRICE PROPOSALS

All Price Proposals shall be placed in a sealed envelope having the name and address of the Proposer, and the statement "Price Proposal for the Design-Build of North Carolina Turnpike Authority Project No. _____ in _____County(ies)" on the outside of the envelope. If delivered by mail, the sealed envelope shall be placed in another sealed envelope and the outer envelope addressed to the NCTA Chief Engineer as stated in the Instructions to Proposer. The outer envelope shall also bear the statement "Price Proposal for the Design-Build of North Carolina Turnpike Authority Project No. _____". All Technical Proposals shall be placed in a sealed envelope having the name and address of the Proposer, and the statement "Technical Proposal for the Design-Build of North Carolina Turnpike Authority Project No. _____ in _____County(ies)" on the outside of the envelope. If delivered by mail, the sealed envelope shall be placed in another sealed envelope and the outer envelope addressed to the NCTA Chief Engineer as stated in the Instructions to Proposers. The outer envelope shall also bear the statement "Technical Proposal for the Design-Build of North Carolina Turnpike Authority Project No. _____". If delivered in person on or before the due date, the sealed envelope shall be delivered to the office of the NCTA Chief Engineer as indicated in the Instructions to Proposers. Price Proposals and Technical Proposals shall be submitted in accordance with the section entitled “Submission of Design-Build Proposal” contained in the Instructions to Proposers.

All Price Proposals and Technical Proposals shall be delivered prior to the time specified in the Instructions to Proposers. Price Proposals and Technical Proposals received after such time will not be accepted and will be returned to the proposer unopened.

102-13 WITHDRAWAL OR REVISION OF BIDS

A Design-Build Team will not be permitted to withdraw its Technical and Price Proposals after they have been submitted to the Turnpike Authority, unless allowed under Article 103-3 or unless otherwise approved by the NCTA Chief Engineer.

102-14 RECEIPT AND OPENING OF BIDS

Price Proposals will be opened and read publicly at the time and place indicated in the Instructions to Proposers. The scores of the previously conducted evaluation of the Technical Proposals may also be read publicly in accordance with the procedures outlined in the Instructions to Proposers. Proposers, their authorized agents, and other interested parties are invited to be present.

102-15 REJECTION OF BIDS

Any Price Proposal submitted which fails to comply with any of the requirements of Articles 102-8, 102-10 or 102-11, or with the requirements of the project scope and functional

specifications shall be considered irregular and may be rejected. A Price Proposal that does not contain costs for all proposal items shall be considered irregular and may be rejected.

Irregularities due to apparent clerical errors and omissions may be waived in accordance with Article 103-2.

Any Price Proposal including any unit or lump sum bid price that is unbalanced to the potential detriment of the Turnpike Authority will be considered irregular and may be rejected. In the event the North Carolina Turnpike Authority Board determines it is in the best public interest to accept such irregular Price Proposal, it may award the contract based on such Price Proposal subject to the requirements of Subarticle 109-4(C).

All proposers shall comply with all applicable laws regulating the practice of general contracting as contained in *Chapter 87 of the General Statutes of North Carolina* which requires the proposer to be licensed by the N.C. Licensing Board for Contractors when bidding on any non-federal aid project where the bid is $30,000 or more, except for certain specialty work as determined by the licensing board. Proposers shall also comply with all other applicable laws regulating the practices of electrical, plumbing, heating and air conditioning and refrigeration contracting as contained in *Chapter 87 of the General Statutes of North Carolina*. Notwithstanding the limitations on bidding, the proposer who is awarded any project shall comply with *Chapter 87 of the General Statutes of North Carolina* for licensing requirements within 60 calendar days of Price Proposal opening, regardless of funding sources.

In addition to the above, any Price Proposals for contracts not funded with any Federal funds that are submitted by any proposer who has failed to obtain the appropriate General Contractor's license, as required by Chapter 87 of the General Statutes of North Carolina, shall be considered non-responsive and will not be considered for award.

The right to reject any and all Price Proposals shall be reserved to the Authority Board.

102-16 DISQUALIFICATION OF PROPOSERS

Any one of the following causes may be justification for disqualifying a Design-Build Team from further bidding until he has applied for and has been prequalified in accordance with Article 102-2:

(A) Unsatisfactory progress in accordance with Article 108-8.

(B) Being declared in default in accordance with Article 108-9.

(C) Uncompleted contracts which, in the judgment of the Engineer, might hinder or prevent the timely completion of additional work if awarded.

(D) Failure to comply with prequalification requirements.

(E) The submission of more than one Price Proposal for the same contract by an individual, partnership, joint venture, L.L.C. or corporation prequalified under the same prequalification number.

(F) Evidence of collusion among bidders. Each participant in such collusion will be disqualified.

(G) Failure to furnish a non-collusion affidavit upon request.

(H) Failure to comply with Article 108-6.

(I) Failure to comply with a written order of the Engineer as provided in Article 105-1 if in the judgment of the Engineer, such failure is of sufficient magnitude to warrant disqualification.

(J) Failure to satisfy the Disadvantaged Business Enterprise requirements of the project special provisions.

(K) The Turnpike Authority has not received the amount due under a forfeited bid bond or under the terms of a performance bond.

(L) Failure to submit the documents required by Article 109-10 within 120 days after the contract Final Acceptance Date, as defined in Article 101-3.

(M) Failure to return overpayments as directed by the Engineer.

(N) Failure to maintain a satisfactory safety index as required by Article 102-2.

(O) Recruitment of Department or Turnpike Authority employees for employment as prohibited by Article 108-5.

(P) False information submitted on any application, statement, certification, reports, records and/or reproduction.

Conviction of any employee of the company, of any applicable state or federal law, may be fully imputed to the business firm with which he is or was associated or by whom he was employed or with the knowledge or approval of the business firm or there after ratified by it.

(Q) Being debarred from performing work with other city, state, and federal agencies.

(R) Failure to perform guaranty work within the terms of the contract.

Upon a determination that a Design-Build Team or any of its affiliated companies should be disqualified for one or more of the reasons listed above, the Turnpike Authority may, at its discretion, disqualify all entities prequalified under the same Prequalification Number from further consideration on North Carolina Turnpike Authority projects.

A Design-Build Team or Subcontractor may be disqualified, for cause, from bidding on NCTA projects independent of any action taken by the Department of Transportation. Disqualification from any NCTA work as a result of any cause will culminate in a notification of such to the Department of Transportation, and may result in a recommendation for disqualification from the Department of Transportation's Prequalified Bidders List or Approved Subcontractor List.

SECTION 103

AWARD AND EXECUTION OF CONTRACT

103-1 CONSIDERATION OF PRICE PROPOSALS

After the Price Proposals are opened and read, they will be tabulated. The Price Proposal and score of the Technical Proposal will be made available in accordance with procedures outlined in the Instructions to Proposers. In the event of errors, omissions, or discrepancies in the costs, corrections to the Price Proposal will be made in accordance with the provisions of Article 103-2. Such corrected costs will be used to determine the lowest adjusted price.

After the reading of the Price Proposals and technical scores, the Department will calculate the lowest adjusted price as described in the "Instructions to Proposers.

The right is reserved to reject any or all Price Proposals, to waive technicalities, to request the Proposer with the lowest adjusted price to submit an up-to-date financial and operating statement, to advertise for new proposals, or to proceed to do the work otherwise, if in the judgment of the North Carolina Turnpike Authority Board, the best interests of the State will be promoted thereby.

103-2 CORRECTION OF BID ERRORS

(A) Paper Bids

(1) **General**

The provisions of this article shall apply in waiving irregularities and correcting apparent clerical errors and omissions in the unit bid price and the amount bid for bid items.

(2) **Omitted Unit Bid Price--Amount Bid Completed--Quantity Bid on Is One Unit**

In the case of a bid item for which the amount bid is completed, but the unit bid price is omitted and the quantity shown in the proposal for the bid item is only one unit, the unit bid price shall be deemed to be the same as the amount bid for that bid item and shall constitute the contract unit price for that bid item.

(3) **Omitted Unit Bid Price--Amount Bid Completed--Quantity Bid on Is More Than One Unit**

In the case of a bid item for which the amount bid is completed (extension of the unit bid price by the quantity) but the unit bid price is omitted and the quantity shown in the proposal for the bid item is more than one unit, the unit bid price shall be deemed to be the amount derived by dividing the amount bid for that item by the quantity shown in the proposal for that bid item and shall constitute the contract unit price for that bid item.

(4) **Discrepancy in the Unit Bid Price and the Amount Bid**

In the case of a bid item in which there is a discrepancy between the unit bid price and the extension for the bid item (amount bid), the unit bid price shall govern.

As an exception to the above, on bids for contracts not funded with any Federal funds, the extension for the bid item (amount bid) shall govern when the discrepancy consists of an obvious clerical mistake in the unit bid price consisting of the misplacement of a decimal point. The correction to the unit bid price will be made only when the following two conditions are met:

(a) The corrected unit bid price multiplied by the quantity equals the amount bid for the bid item.

(b) The corrected unit bid price is closer to the average of the engineer's estimate and the individual bids for the contract item than the uncorrected unit bid price.

(5) **Omitted Unit Bid Price and Omitted Amount Bid--Deemed Zero Bid**

The provisions of this subarticle shall apply only to bids for contracts not funded with any Federal funds.

In the case of omission of the unit bid price and the omission of the amount bid for any one item, and also in the case of the omission of the amount bid where a lump sum price is called for, the amount bid and the unit bid price shall be deemed to be zero where the value of the omitted amount bid is 1 percent or less of the total amount bid for the entire project (excluding the omitted item). The value of the omitted amount bid will be derived by determining the average of the engineer's estimate and the individual bids for that contract item.

Where the unit bid price is deemed to be zero as provided in this subarticle, such zero unit bid price shall constitute the contract unit price for the affected bid item.

Where the amount bid for a lump sum bid item is deemed to be zero as provided in this subarticle, such zero amount bid shall constitute the contract lump sum price for that bid item.

This subarticle shall not apply to the bid item for Mobilization.

(6) **Unit bid prices containing more than four (4) decimal places.**

In the case of a Bid Item for which the amount bid contains more than four (4) decimal places for the Unit Bid Price, only the whole number and the first four (4) decimal places shall constitute the Contract Unit Price for that Bid Item.

(7) **Discrepancy in the "Total Amount Bid" and the addition of the "Amount Bid" for each line Item**

In the case of the Total Amount Bid does not equal the summation of each Amount Bid for the line items, the summation of each Amount Bid for the line items shall be deemed to be the correct total for the entire project.

(8) **Omitted Total Amount Bid –Amount Bid Completed**

If the Total Amount Bid is not completed and the Amount Bid for all line items is completed the Total Amount Bid shall be the summation of the Amount Bid for all line items.

103-3 WITHDRAWAL OF PRICE PROPOSALS--MISTAKE

(A) Criteria for Withdrawal of Price Proposal:

The North Carolina Turnpike Authority may allow a proposer submitting a bid pursuant to G.S. 136-28.1 for construction or repair work to withdraw his Price Proposal after the scheduled time of Price Proposal opening upon a determination that:

(1) A mistake was in fact made in the preparation of the Price Proposal.

(2) The mistake in the Price Proposal is of a clerical or mathematical nature and not one of bad judgment, carelessness in inspecting the work site, or in reading the contract.

(3) The mistake is found to be made in good faith and was not deliberate or by reason of gross negligence.

(4) The amount of the error or mistake is equal to or greater than 3 percent of the total amount bid.

(5) The notice of mistake and request for withdrawal of the Price Proposal by reason of the mistake is communicated to the Engineer within 48 hours after the scheduled time of Price Proposal opening. Upon proper notification of a mistake and request for withdrawal of Price Proposal, the proposer shall submit within 48 hours written notice of mistake accompanied by copies of Price Proposal preparation information to the Engineer. The notification of a mistake, request for withdrawal of Price Proposal and copies of Price Proposal preparation information shall be submitted to the NCTA Chief Engineer.

(6) The Turnpike Authority will not be prejudiced or damaged except for the loss of the bid.

(B) Hearing by the Engineer

If a proposer files a notice of mistake along with a request to withdraw his Price Proposal, the Engineer will promptly hold a hearing thereon. The Engineer will give to the requesting proposer reasonable notice of the time and place of any such hearing. The proposer may appear at the hearing and present the original working papers, documents, or materials used in the preparation of the Price Proposal sought to be withdrawn, together with other facts and arguments in support of his request to withdraw his Price Proposal. The proposer shall be required to present a written affidavit that the documents presented are the original, unaltered documents used in the preparation of the Price Proposal.

(C) Action by NCTA Chief Engineer

A determination may be made by the NCTA Chief Engineer that the proposer meets the criteria for withdrawal of the Price Proposal as set forth in Subarticle 103-3(A) upon presentation of clear and convincing evidence by the proposer. The Engineer will present his findings to the NCTA Chief Engineer for action on the proposer's request. The Engineer will advise the proposer of the NCTA Chief Engineer's decision prior to the Authority Board's consideration of award.

(D) Bid Bond

If a Price Proposal mistake is made and a request to withdraw the Price Proposal is made, the bid bond shall continue in full force and effect until there is a determination by the NCTA Chief Engineer that the conditions in Subarticle 103-3(A) have been met. The effect of the refusal of the Design-Build Team to give payment and performance bonds within 14 calendar days after the notice of award is received by him, if award has been made by the Authority Board after consideration and denial of the Design-Build Team's request to withdraw their Price Proposal, shall be governed by the terms and conditions of the bid bond.

103-4 AWARD OF CONTRACT

(A) General

The North Carolina Turnpike Authority, in accordance with the provisions of Title VI of the Civil Rights Act of 1964 (78 Statue. 252) and the Regulations of the Department of Transportation (49 CFR, Part 21), issued pursuant to such act, hereby notifies all proposers that it will affirmatively insure that contracts entered in pursuant to advertisements, if awarded, will be made by the Authority Board to the responsible proposer with the lowest adjusted price without discrimination on the grounds of race, color, or national origin. The responsible proposer with the lowest adjusted price will be notified by letter that his Price Proposal has been accepted and that he has been awarded the contract. This letter shall constitute the notice of award. The notice of award, if the award be made, will be issued within the timeframe specified in the RFP after the opening of bids, except that with the consent of the responsible proposer with the lowest adjusted price the decision to award the contract to such proposer may be delayed for as long a time as may be agreed upon by the Turnpike Authority and such proposer. In the absence of such agreement, the responsible proposer with the lowest adjusted price may withdraw his Price Proposal at the expiration of the timeframe specified in the RFP without penalty if no notice of award has been issued.

Award of a contract involving any unbalanced bid price(s) may be made in accordance with the requirements of Article 102-15.

(B) BLANK

103-5 CANCELLATION OF AWARD

The Authority Board reserves the right to rescind the award of any contract at any time before the receipt of the properly executed contract bonds from the successful proposer.

103-6 RETURN OF BID BOND OR BID DEPOSIT

Checks that have been furnished as a bid deposit will be retained until after the contract bonds have been furnished by the successful proposer, at which time the Turnpike Authority warrants in the equivalent amount of checks that were furnished as a bid deposit will be issued.

Paper bid bonds will be retained by the Turnpike Authority until the contract bonds are furnished by the successful proposer, after which all such bid bonds will be destroyed unless the individual bid bond form contains a note requesting that it be returned to the proposer or the Surety.

103-7 CONTRACT BONDS

The successful proposer, within 14 calendar days after the notice of award is received by him, shall provide the North Carolina Turnpike Authority with a contract payment bond and a contract performance bond each in an amount equal to 100 percent of the amount of the contract. All bonds shall be in conformance with G.S. 44A-33. The corporate surety furnishing the bonds shall be authorized to do business in the State.

103-8 EXECUTION OF CONTRACT

As soon as possible following receipt of the properly executed contract bonds, the Turnpike Authority will complete the execution of the contract, retain the original contract, and return one certified copy of the contract to the Design-Build Team.

103-9 FAILURE TO FURNISH CONTRACT BONDS

The successful proposer's failure to file acceptable bonds within 14 calendar days after the notice of award is received by him shall be just cause for the forfeiture of the bid bond or bid deposit and rescinding the award of the contract. Award may then be made to the responsible proposer with the next lowest adjusted price or the work may be readvertised and constructed under contract or otherwise, as the Authority Board may decide.

SECTION 104
SCOPE OF WORK

104-1 INTENT OF CONTRACT

The intent of the contract is to prescribe the work or improvements that the Design-Build Team undertakes to perform, in full compliance with the contract. In case the method or character of any part of the work is not covered by the contract, this section shall apply. The Design-Build Team shall perform all work in accordance with the contract or as may be modified by written orders, and shall do such special, additional, extra, and incidental work as may be considered necessary to complete the work to the full intent of the contract. Unless otherwise provided elsewhere in the contract, the Design-Build Team shall furnish all implements, machinery, equipment, tools, materials, supplies, transportation, and labor necessary for the design, prosecution and completion of the work.

104-2 SUPPLEMENTAL AGREEMENTS

Whenever it is necessary to make amendments to the contract in order to complete satisfactorily the proposed construction and/or to provide authorized time extensions, the Engineer shall have the authority to enter into a supplemental agreement covering such amendments.

Supplemental agreements shall become a part of the contract when executed by the Engineer and an authorized representative of the Design-Build Team. The Design-Build Team shall file with the Engineer a copy of the name or names of his representatives who are authorized to sign supplemental agreements.

104-3 ALTERATIONS OF PLANS OR DETAILS OF CONSTRUCTION

The Engineer reserves the right to make, at any time during the progress of the work, such alterations in the contract as may be found necessary or desirable. Under no circumstances will an alteration involve work beyond the termini of the proposed construction except as may be necessary to satisfactorily complete the project. Such alterations shall not invalidate the contract nor release the Surety, and the Design-Build Team agrees to perform the work as altered at his contract unit or lump sum prices the same as if it had been a part of the original contract except as otherwise herein provided.

An adjustment in the affected contract unit or lump sum prices due to alterations in the contract that materially change the character of the work and the cost of performing the work will be made by the Engineer only as provided in this article.

If the Engineer makes an alteration in the contract, which he determines will materially change the character of the work and the cost of performing the work, an adjustment will be made and the contract modified in writing accordingly. The Design-Build Team will be paid for performing the affected work in accordance with Subarticle 104-8(A).

When the Design-Build Team is required to perform work which is, in his opinion, an alteration in the contract which materially changes the character of the work and the cost of performing the work, he shall notify the Engineer in writing prior to performing such work.

The Engineer will investigate and, based upon his determination, one of the following will occur:

(A) If the Engineer determines that the affected work is an alteration of contract that materially changes the character of the work and the cost of performing the work, the Design-Build Team will be notified in writing by the Engineer and compensation will be made in accordance with Subarticle 104-8(A).

(B) If the Engineer determines that the work is not such an alteration in the contract that materially changes the character of the work and the cost of performing the work, he will notify the Design-Build Team in writing of his determination. If the Design-Build Team, upon receipt of the Engineer's written determination, still intends to file a claim for additional compensation by reason of such alteration, he shall notify the Engineer in writing of such intent prior to beginning any of the alleged altered work and the provisions of Subarticle 104-8(B) shall be strictly adhered to.

No contract adjustment will be allowed under this article for any effects caused on unaltered work.

104-4 SUSPENSIONS OF WORK ORDERED BY THE ENGINEER

(A) Suspensions of the Work Ordered by the Engineer

When the Engineer suspends in writing the performance of all or any portion of the work for a period of time not originally anticipated, customary, or inherent to the construction industry and the Design-Build Team believes that additional compensation for idle equipment and/or labor is justifiably due as a result of such suspension, the Design-Build Team shall notify the Engineer in writing of his intent to file a claim for additional compensation within 7 days after the Engineer suspends the performances of the work and the provisions of Subarticle 104-8 (C) shall be strictly adhered to.

Within 14 calendar days of receipt by the Design-Build Team of the notice to resume work, the Design-Build Team shall submit his claim to the Engineer in writing. Such claim shall set forth the reasons and support for such adjustment in compensation, including cost records, and any other supporting justification in accordance with Subarticle 104-8(C).

(B) Alleged Suspension

If the Design-Build Team contends they have been prevented from performing all or any portion of the work for a period of time not originally anticipated, customary, or inherent to the construction industry because of conditions beyond the control of and not the fault

of the Design-Build Team, its suppliers, or subcontractors at any tier, and not caused by weather, but the Engineer has not suspended the work in writing, the Design-Build Team shall submit in writing to the Engineer a notice of intent to file a claim for additional compensation by reason of such alleged suspension. No adjustment in compensation will be allowed for idle equipment and/or labor prior to the time of the submission of the written notice of intent to file a claim for additional compensation by reason of such alleged suspension. Upon receipt, the Engineer will evaluate the Design-Build Team's notice of intent to file a claim for additional compensation. If the Engineer agrees with the Design-Build Team's contention, the Engineer will suspend in writing the performance of all or any portion of the work and the requirements of Subarticle 104-8(C) shall be strictly adhered to.

If the Engineer does not agree with the Design-Build Team's contention as described above and determines that no portion of the work should be suspended, he will notify the Design-Build Team in writing of his determination. If the Design-Build Team does not agree with the Engineer's determination, the requirements of Subarticle 104-8(C) shall be strictly adhered to. Within 14 calendar days after the last day of the alleged-suspension, the Design-Build Team shall submit his claim to the Engineer in writing. Such claim shall set forth the reasons and support for such adjustment in compensation, including cost records, and any other supporting justification in accordance with Subarticle 104-8(C).

(C) Conditions

No adjustment in compensation will be allowed under Subarticles 104-4(A) and 104-4(B) for any reason whatsoever for each occurrence of idle equipment and/or idle labor which has a duration of twenty-four hours or less.

No adjustment in compensation will be allowed under Subarticles 104-4(A) and 104-4(B) to the extent that performance would have been suspended by any other cause, or for which an adjustment is provided for or excluded under any other term or condition of this contract.

No adjustment in compensation will be allowed under Subarticles 104-4(A) and 104-4(B) for any effects caused on unchanged work. No adjustment in compensation will be allowed under Subarticles 104-4(A) and 104-4(B) except for idle equipment and/or idle labor resulting solely from the suspension of work in writing by the Engineer.

No adjustment in compensation will be allowed under Subarticles 104-4(A) and 104-4(B) where temporary suspensions of the work have been ordered by the Engineer in accordance with Article 108-7 and the temporary suspensions are a result of the fault or negligence of the Design-Build Team.

104-5 OVERRUNS AND UNDERRUNS OF CONTRACT QUANTITIES

(A) General

The Engineer reserves the right to make at any time during the work such changes in quantities as are necessary to satisfactorily complete the project. Such changes in quantities shall not invalidate the contract nor release the surety, and the Design-Build Team agrees to perform the work as changed. The Engineer will notify the Design-Build Team in writing of the significant changes in the quantities.

The Design-Build Team will be entitled to an adjustment in contract unit prices for increased costs incurred over the original bid prices in performing contract items that overrun or underrun the estimated contract quantities only as provided for in this article.

(B) Overruns--Increase in Unit Price

If the actual quantity of any major contract item overruns the original bid quantity by more than 15 percent of such original bid quantity, or the actual quantity of any minor contract item overruns the original bid quantity by more than 100 percent of such original bid quantity, an increase in the contract unit price, excluding loss of anticipated profits, may be authorized by the Engineer. Revised contract unit prices pertaining to overruns will be applicable only to that portion of the overrun that is in excess of the percentages stated above.

(1) Whenever it is anticipated that an overrun in a major or minor contract item in excess of that described above will occur, the Design-Build Team may make written request for a revision in contract unit prices. It shall be incumbent upon the Design-Build Team to justify the request for a revision in contract unit prices. After reviewing the Design-Build Team's request, the Engineer will notify the Design-Build Team of his determination as follows:

(a) If the Engineer determines a revision in the contract unit price is justified, and the Engineer and the Design-Build Team are in agreement as to the revision to be made in the contract unit price, a supplemental agreement covering the revised unit price will be consummated prior to performing work on that quantity in excess of the percentage set forth above.

If the Engineer determines a revision in the contract unit price is justified, and the Engineer and the Design-Build Team are not in agreement as to the revision to be made in the contract unit price, the Engineer will issue a force account notice prior to performing work on that quantity in excess of the percentage set forth above.

(b) If the Engineer determines a revision in the contract unit price is not justified he will notify the Design-Build Team of his determination in writing and payments will be made for the work at the contract unit price. Upon completion of the work, the Design-Build Team may request an adjustment in the contract unit price as provided in paragraph 2 below.

(2) Whenever an overrun in a contract item in excess of the percentages previously set forth has occurred and a supplemental agreement establishing an increase in the contract unit price has not been executed or the Engineer has not issued a force account notice, the Design-Build Team may make written request for a revision in the original contract unit price. Any adjustment in the contract unit prices due to overruns will be made by the Engineer based upon his evaluation and comparison of the Design-Build Team's documented cost records the contract unit prices for those contract items. The Design-Build Team's documented cost records for the work performed on those quantities beyond the percentages stated above shall be kept in accordance with the requirements of Article 109-3. The Design-Build Team's cost records and supporting data shall be complete in every respect and in such form that they can be checked. It shall be incumbent upon the Design-Build

Team to satisfy the Engineer of the validity of any request presented by the Design-Build Team for an adjustment in contract unit price. After reviewing the Design-Build Team's request, the Engineer can make such adjustment as he deems warranted based upon his engineering judgment and the payment to the Design-Build Team will be made accordingly.

(C) Underruns--Increase in Unit Price

If the actual quantity of any major contract item underruns the original bid quantity by more than 15 percent of such original bid quantity, an increase in the contract unit price, excluding loss of anticipated profit, may be authorized by the Engineer. Revised contract unit prices pertaining to underruns of major contract items will be applicable to the entire quantity of the contract item that underruns. No revision will be made to the contract unit price for any minor contract item that underruns the original bid quantities.

Whenever it is anticipated that an underrun in a major contract item in excess of that described above will occur, the Design-Build Team may make written request for a revision in contract unit price. If the Engineer and the Design-Build Team are in agreement as to the revision to be made in the contract unit price, then a supplemental agreement covering the revised unit price will be entered into. If the Engineer and the Design-Build Team are not in agreement, then after performance of the work, a revised unit price may be determined as described below.

Whenever an underrun in a major contract item in excess of the percentage previously set forth has occurred, and a supplemental agreement establishing an increase in the contract unit price has not been executed, the Design-Build Team may make written request for a revision in the original contract unit price. The Design-Build Team shall submit sufficient documentation and analysis of his costs to satisfy the Engineer of any non-recovered costs included in the item that underran. Any adjustment in contract unit prices due to underruns will be made by the Engineer based upon his evaluation of the Design-Build Team's documentation and analysis showing how changes in contract item cost are attributable to the underrun. An analysis of costs shall be supplemented with the Design-Build Team's documented cost records for work performed on the total quantity of the affected item where the Design-Build Team's request for compensation includes compensation for costs other than recovered fixed costs. The Design-Build Team's cost records shall be complete in every respect and in such form that Engineer can check them. It shall be incumbent upon the Design-Build Team to satisfy the Engineer of the validity of any request presented by the Design-Build Team for adjustment in contract unit price. After reviewing the Design-Build Team's request, the Engineer may make such adjustment as he deems warranted based upon his engineering judgement and the payment will be made on the final estimate. The total payment including any additional compensation granted by the Engineer due to an underrun in a major contract item shall not exceed the payment that would have been made for the performance of 100 percent of the original contract quantity at the original contract unit price.

In the event of underruns of major items less than 15 percent and underruns of minor items, that involve fabricated materials and that are not considered to be stock items, if fabrication of such material is begun or completed before the Design-Build Team is advised of the reduction in the quantity of the pay item, the Department will reimburse the Design-Build Team for the verified fabrication cost, including the cost of material

less salvage value, or it may instruct the Design-Build Team to have the fabricated material delivered to a site designated by the Engineer and make payment for such material in accordance with Article 109-6.

(D) Overruns and Underruns--Reduction in Unit Price

Whenever it is anticipated that an overrun or underrun in a major contract item in excess of 15 percent or an overrun in a minor contract item in excess of 100 percent will occur, the Engineer may make written request for a reduction in contract unit price. If the Engineer and the Design-Build Team are in agreement as to the decrease to be made in the contract unit price, a supplemental agreement covering the revised unit price will be consummated prior to beginning work on that quantity in excess of the allowable percentages. If the Engineer and the Design-Build Team are not in agreement as to the decrease to be made, the Design-Build Team will be directed to perform the affected work on a force account basis. Payment for the affected work will be made based upon force account records kept in accordance with Article 109-3 but shall not exceed that payment that would have been made at the contract unit price.

104-6 ELIMINATED CONTRACT ITEMS

The Engineer may eliminate any item from the contract, and such action will in no way invalidate the contract. In the event the item of work involves pre-fabricated materials, which are not considered to be stock items, and fabrication of such material is begun or completed before the Design-Build Team is advised of the elimination of the contract item, the Turnpike Authority may reimburse the Design-Build Team for the verified fabrication cost including the cost of materials less salvage value or may instruct the Design-Build Team to have the fabricated material delivered to a site designated by the Engineer and make payment for such material in accordance with Article 109-6.

If the Design-Build Team has partially completed a contract item prior to notification of the elimination of such item, the Turnpike Authority will reimburse the Design-Build Team for the verified actual cost of the partially completed work not to exceed the payment that would have been made at the contract unit or lump sum price for the completed work.

In any event no payment will be made for loss of anticipated profits and no other allowance will be made for eliminated items except as listed above.

104-7 EXTRA WORK

The Design-Build Team shall perform extra work whenever it is deemed necessary or desirable to complete fully the work as contemplated. Extra work shall be performed in accordance with the contract and as directed. No extra work shall be commenced prior to specific authorization for the performance of such extra work being given by the Engineer.

Extra work that is specifically authorized by the Engineer will be paid for in accordance with Subarticle 104-8(A).

When the Design-Build Team is required to perform work which is in his opinion extra work, he shall notify the Engineer in writing prior to performing such work.

The Engineer will investigate and, based upon his determination, one of the following will occur.

(A) If the Engineer determines that the affected work is extra work, the Design-Build Team will be notified in writing by the Engineer and compensation will be made in accordance with Subarticle 104-8(A).

(B) If the Engineer determines that the work is not extra work, he will notify the Design-Build Team in writing of his determination. If the Design-Build Team upon receipt of the Engineer's written determination intends to file a claim for additional compensation by reason of such work, he shall notify the Engineer in writing of such intent prior to beginning any of the alleged extra work and in conformance with the requirements of Subarticle
104-8(B).

104-8 COMPENSATION AND RECORD KEEPING

(A) Compensation

When the Engineer and Design-Build Team agree that compensation is due under the requirements of Articles 104-3 or 104-7, payment will be made in accordance with one of the following:

(1) When the Engineer and the Design-Build Team agree to the prices to be paid, the agreement will be set forth in a supplemental agreement. If the estimated total cost of the affected work is equal to or less than $25,000.00 and the prices for performing the work have been mutually agreed to, the Design-Build Team may begin work before executing the supplemental agreement. If the estimated total cost of the affected work is more than $25,000.00, the Design-Build Team shall not begin the affected work until the supplemental agreement is executed.

(2) When the Engineer and the Design-Build Team cannot agree to the prices to be paid for the affected work, the Engineer will issue a force account notice prior to the Design-Build Team beginning work. In this instance the affected work shall be performed as directed by the Engineer and paid for in accordance with the requirements of Article 109-3.

(B) Claim for Additional Compensation

The Design-Build Team's notice of intent to file a claim for additional compensation under the requirements of Articles 104-3 and 104-7 shall be given to the Engineer in writing. The Design-Build Team shall keep accurate and detailed cost records in accordance with the requirements of Article 109-3. The Design-Build Team's cost records and supporting data shall be complete in every respect and in such form that they may be checked by the Engineer. The Design-Build Team's cost records and supporting data shall clearly indicate the cost of performing the work in dispute and shall separate the cost of any work for which payment has been made. The Design-Build Team's cost records shall be kept up to date and the Engineer shall be given the opportunity to review the methods by which the records are being maintained. The cost records shall be prepared on a weekly basis for each occurrence for which notice of intent to file a claim has been given and submitted to the Engineer within 7 days after the end of a given weekly period.

If the Design-Build Team chooses to pursue the claim after the disputed work is complete, he shall submit a written claim to the Engineer for an adjustment in

compensation based upon his cost records within 120 calendar days after completion of the disputed work. This claim shall summarize previously submitted cost records and clearly describe the Design-Build Team's justification for an adjustment in compensation under the terms of the contract. The claim shall be accompanied by a certification from an officer of the company or person authorized to execute supplemental agreements, stating that the claim is truthful and accurate.

Upon receipt, the Engineer will review the Design-Build Team's request and supporting documentation and notify the Design-Build Team if the request is complete with all necessary supporting documentation and cost records.

If the Engineer determines that the work covered by the claim is in fact compensable under the terms of the contract, an adjustment in compensation will be made based upon the documentation presented and his engineering judgment. The adjustment will be made on the next partial pay estimate and reflected on the final estimate. The compensation allowed shall be limited to the amount that would be paid if the work were performed in accordance with Article 109-3.

If the Engineer determines that the work covered by the claim is not compensable under the terms of the contract, the claim will be denied.

The Engineer will notify the Design-Build Team of his determination whether or not an adjustment of the contract is warranted within 120 calendar days after receipt of the complete request, all necessary supporting justification, and cost records.

The failure on the part of the Design-Build Team to perform any of the following shall be a bar to recovery under the requirements of Articles 104-3 or 104-7:

(1) The failure to notify the Engineer in writing prior to performing the work in dispute that he intends to file a claim.

(2) The failure of the Design-Build Team to keep records in accordance with the requirements of Article 109-3.

(3) The failure of the Design-Build Team to give the Engineer the opportunity to monitor the methods by which records are being maintained.

(4) The failure of the Design-Build Team to submit additional documentation requested by the Engineer provided documentation requested is available within the Design-Build Team's records.

(5) The failure of the Design-Build Team to submit cost records on a weekly basis.

(6) The failure of the Design-Build Team to submit the written request for an adjustment in compensation with cost records and supporting information within 120 calendar days of completion of the affected work.

(C) Compensation

The Design-Build Team's notice of intent to file a claim for additional compensation under the requirements of Subarticle 104-4(A) shall be given to the Engineer in writing within 7 days after the Engineer suspends the performance of the work. For an alleged suspension, the Design-Build Team's notice of intent to file a claim for additional compensation under the requirements of Subarticle 104-4(B) shall be given to the Engineer in writing. The Design-Build Team shall keep accurate and detailed records of the alleged idle equipment and alleged idle labor. The Design-Build Team's cost records,

supporting data, and supporting information shall be complete in every respect and in such form that they may be checked by the Engineer. The Design-Build Team's cost records, supporting data, and supporting information for equipment idled due to the suspension or alleged suspension shall specifically identify each individual piece of equipment, its involvement in the work, its location on the project, the requested rental rate and justification as to why the equipment cannot be absorbed into unaffected work on the project during the period of suspension or alleged suspension. The Design-Build Team's cost records, supporting data, and supporting information for idle labor shall include the specific employees, classification, dates and hours idled, hourly rate of pay, their involvement in the project, and justification as to why they cannot be absorbed into the unaffected work on the project or other projects during the period of suspension or alleged suspension. The Design-Build Team's cost records, supporting data, and supporting information shall be kept up-to-date and the Engineer shall be given the opportunity to review the methods by which the records, data, and information are being maintained. The cost records, supporting data, and supporting information shall be prepared on a weekly basis for each occurrence for which notice of intent to file a claim has been given and submitted to the Engineer within 7 days after the end of a given weekly period.

If the Design-Build Team chooses to pursue the claim after the suspension or alleged suspension period has ended, he shall submit a written claim to the Engineer for an adjustment in compensation based upon his cost records due to idle equipment and/or idle labor within 14 calendar days of receipt of the notice to resume work or within 14 calendar days of expiration of the alleged suspension period. This request shall summarize previously submitted cost records and clearly describe the Design-Build Team's justification for an adjustment in compensation under the terms of the contract.

Upon receipt, the Engineer will evaluate the Design-Build Team's request. If the Engineer agrees that the cost of the work directly associated with the suspension or alleged suspension has increased as a result of such suspension or alleged suspension and the suspension or alleged suspension was caused by conditions beyond the control of and not the fault of the Design-Build Team, its suppliers, or subcontractors at any approved tier, and not caused by weather, the Engineer will make an adjustment, excluding profit, and modify the contract in writing accordingly. The Design-Build Team will be paid for the verified actual cost of the idle equipment and idle labor. The compensation allowed shall be limited to the equipment, labor, bond, insurance, and tax costs, excluding profits, computed in accordance with Article 109-3.

If the Engineer determines that the suspensions of the work by the Engineer or alleged suspensions do not warrant an adjustment in compensation, he will notify the Design-Build Team in writing of his determination.

The Engineer will notify the Design-Build Team of his determination of whether or not an adjustment in compensation is warranted within 120 calendar days after receipt of the complete request, all necessary supporting justification, and cost records.

The failure on the part of the Design-Build Team to perform any of the following shall be a bar to recovery under the requirements of Article 104-4:

(1) The failure to notify the Engineer in writing within 7 days after the Engineer suspends in writing the performance of all or any portion of the work.

(2) The failure to notify the Engineer in writing that he intends to file a claim by reason of alleged suspension.

(3) The failure of the Design-Build Team to keep records in accordance with the details of Article 109-3.

(4) The failure of the Design-Build Team to give the Engineer the opportunity to monitor the methods by which records are being maintained.

(5) The failure of the Design-Build Team to submit additional documentation requested by the Engineer provided documentation requested is available within the Design-Build Team's records.

(6) The failure of the Design-Build Team to submit cost records on a weekly basis.

(7) The failure of the Design-Build Team to submit the written request for an adjustment in compensation with cost records, supporting data, and supporting information within 14 calendar days of receipt of the notice to resume work.

(7) The failure of the Design-Build Team to submit the written request for an adjustment in compensation with cost records, supporting data, and supporting information within 14 calendar days after the last day of the period during which the Design-Build Team contends he has been prevented from performing all or any portion of the work for an unreasonable period of time (not originally anticipated, customary, or inherent to the construction industry) because of conditions beyond the control of and not the fault of the Design-Build Team, its suppliers, or subcontractors at any approved tier, and not caused by weather.

(D) Notification of Determination

The failure on the part of the Engineer to notify the Design-Build Team of his determination on the requested adjustment in compensation within 120 calendar days after receipt of the complete request, all supporting justification, and cost records will result in payment of interest on any monies determined to be due from the requested adjustment in compensation. Interest, at the average rate earned by the State Treasurer on the investment within the State's Short Term Investment Fund during the month preceding the date interest becomes payable, will be paid the Design-Build Team on the next partial pay estimate and reflected on the final estimate for the period beginning on the 121st day after receipt of the complete request, all supporting justification, and cost records, and extending to the date the Engineer makes his determination on the disputed work.

If the Design-Build Team fails to receive such adjustment in compensation for the disputed work as he claims to be entitled to under the terms of the contract, the Design-Build Team may resubmit the written request for an adjustment in compensation to the Engineer as a part of the final claim after the project is complete. The Design-Build Team will only be allowed to submit the request for an adjustment in compensation one time during the construction of the project.

(E) Coordination with CPM

If the Design-Build Team requests additional compensation in accordance with Articles 104-3, 104-7, and this Article, a fragmentary logic diagram (fragnet) shall be prepared and submitted with such request. A fragnet is defined as the sequence of new activities

that are proposed to be added to the current schedule to represent the alleged cost and potential time impact(s). The fragnet shall be developed with sufficient detail to clearly depict the alleged change.

The Design-Build Team shall prepare the fragnet depicting all activities and costs associated with the request for additional compensation. The fragnet shall identify all predecessor and successor activities, any changes in durations of existing activities and any activities added to or deleted from the current schedule or record as a direct result of the request for additional compensation.

If the request for additional compensation is agreeable to the NCTA, the NCTA will evaluate the provided fragnet within current schedule of record as follows:

(1) The NCTA will update the current schedule of record to the anticipated supplemental agreement execution date and document the Scheduled Completion Date;
(2) Insert fragnet into the updated schedule developed above;
(3) Identify the new Scheduled Completion Date; and
(4) Assign the associated time difference in the above Scheduled Completion Dates, positive or negative, within the supplemental agreement.

104-9 DISPOSITION OF SURPLUS PROPERTY

All property that is surplus to the needs of the project will remain or become the property of the Design-Build Team, unless otherwise stated in the contract, with the following exceptions:

(A) Materials that are the property of utility companies providing service to buildings that are to be demolished or removed in accordance with Sections 210 and 215.

(B) Materials resulting from the removal of existing pavement in accordance with Section 250 that are to be stockpiled for the use of the Department or the Turnpike Authority.

(C) Materials resulting from the removal of existing structures in accordance with Section 402 where the contract indicates that the material will remain the property of the Department or the Turnpike Authority.

(D) Aggregate base course where the contract requires that this material become the property of the Department or the Turnpike Authority.

(E) Left over materials for which the Turnpike Authority has reimbursed the Design-Build Team as provided in Article 109-6 and

(F) Materials that have been furnished by the Department or the Turnpike Authority for use on the project.

Property shall include but not be limited to materials furnished by the Design-Build Team, the Department, or the Turnpike Authority for either temporary or permanent use on the project, salvaged materials which were part of the existing facility on the date of availability for the project, and all implements, machinery, equipment, tools, supplies, laboratories, field offices, and watercraft which are necessary for the satisfactory completion of the project.

All property that is the property of the Design-Build Team shall be removed from the project by the Design-Build Team prior to final acceptance.

104-10 MAINTENANCE OF THE PROJECT

The Design-Build Team shall maintain each section (R-2635 A, B or C) of the project from the date of beginning physical construction on that section until the project is finally accepted. All guardrail/guiderail within the project limits shall be included in this maintenance. This maintenance shall be continuous and effective and shall be prosecuted with adequate equipment and forces to the end that all work covered by the contract is kept in satisfactory and acceptable conditions at all times. The Design-Build Team shall perform weekly inspections of guardrail and guiderail and shall report damages to the Engineer on the same day of the weekly inspection. Where damaged guardrail and guiderail is repaired or replaced as a result of maintaining the project in accordance with this Article, such repair or replacement shall be performed within 7 consecutive calendar days of such inspection report.

The Design-Build Team shall maintain all existing drainage facilities, except where the work consists of resurfacing only, such that they are in the same condition upon acceptance of the project as they were when the project was made available to the Design-Build Team.

In the event that the Design-Build Team's work is suspended for any reason, the Design-Build Team shall maintain the work covered by the contract, as provided herein.

When a portion of the project is accepted as provided in Article 105-17, immediately after such acceptance the Design-Build Team will not be required to maintain the accepted portions. Should latent defects be discovered or become evident in an accepted portion of the project, such defective work shall be repaired or replaced at no cost to the Turnpike Authority.

Where an observation period(s) is required that extends beyond the final acceptance date, the Design-Build Team shall perform any work required by the observation period until satisfactory completion of the observation period. With the exception of the maintenance of guardrail/guiderail, the Design-Build Team will not be directly compensated for any maintenance operations necessary as this work will be considered incidental to the work covered by the various contract items. The provisions of Article 104-7, Extra Work, and Article 104-8, Compensation and Record Keeping will apply to authorized maintenance of guardrail/guiderail. Performance of weekly inspections of guardrail/guiderail, and the damage reports required as described above, will be considered to be an incidental part of the work being paid for by the various contract items.

104-11 FINAL CLEANING UP

Before acceptance of the project, the highway, borrow sources, waste areas, and all ground occupied by the Design-Build Team within the project limits in connection with the work shall be cleaned of all rubbish, excess materials, temporary structures, and equipment; and all parts of the work shall be left in an acceptable condition.

The Design-Build Team will not be directly compensated for the work of final cleaning up, as this work will be considered incidental to the work covered by the various contract items.

104-12 VALUE ENGINEERING PROPOSAL

This value engineering specification is to provide an incentive to the Design-Build Team to initiate, develop, and present to the Turnpike Authority for consideration, any cost reduction proposals conceived by him involving changes in the contract. This specification does not apply unless the proposal submitted is specifically identified by the Design-Build Team as being presented for consideration as a Value Engineering Proposal. Submittals that propose material

substitutions of permanent features such as changes from rigid to flexible or flexible to rigid pavements, concrete to steel or steel to concrete bridges will not be considered acceptable Value Engineering Proposals. Depending on complexity of evaluation and implementations, Value Engineering Proposals that provide for a total savings prior to distribution of less than ten thousand dollars ($10,000) will not be generally considered.

Value Engineering Proposals contemplated are those that would result in a net savings to the Turnpike Authority by providing a decrease in the total cost of construction or reduce the construction time without increasing the cost to construct the project. The effects the Value Engineering Proposal may have on the following items, but not limited to these items, will be considered by the Turnpike Authority when evaluating the proposal: (1) Service Life; (2) Safety; (3) Reliability; (4) Economy of Operation; (5) Ease of Maintenance; (6) Desired Aesthetics; (7) Design; (8) Standardized Features; and (9) Environmental Impact.

The Turnpike Authority reserves the right to reject the proposal or deduct from the savings identified in the proposal to compensate for any adverse effects to these items which may result from implementation of the proposal.

The Turnpike Authority reserves the right to reject at its discretion any Value Engineering Proposal submitted which would require additional right of way. Substitution of another design alternate, which is detailed in the contract plans, for the one on which the Design-Build Team bid, will not be allowed. Plan errors which are identified by the Design-Build Team and which result in a cost reduction will not qualify for submittal as a Value Engineering Proposal. Pending execution of a formal supplemental agreement, implementing an approved Value Engineering Proposal, the Design-Build Team shall remain obligated to perform in accordance with the terms of the existing contract. No time extension will be granted due to the time required to review a Value Engineering Proposal.

The Design-Build Team is encouraged to include this specification in contracts with subcontractors. The Design-Build Team shall encourage submissions of Value Engineering Proposals from subcontractors, however, it is not mandatory that the Design-Build Team accepts or transmits to the Turnpike Authority, Value Engineering Proposals proposed by his subcontractors. The Design-Build Team may choose any arrangement for the subcontractor value engineering payments, provided that these payments shall not reduce the Turnpike Authority's share of the savings resulting from the Value Engineering Proposal.

Should the Design-Build Team desire a preliminary review of a possible Value Engineering Proposal, prior to expending considerable time and expense in full development, a copy of the preliminary proposal shall be submitted to the Engineer and the NCDOT Value Engineering Office. The submittal shall state Preliminary Value Engineering Proposal Review Request and shall contain sufficient drawings, cost estimates and written information that can be clearly understood and interpreted. Also, include the identity of any Private Engineering Firms proposed by the Design-Build Team to prepare designs or revisions to designs. The Turnpike Authority will review the preliminary submittal only to the extent necessary to determine if it has possible merit as a Value Engineering Proposal. This review does not obligate the Turnpike Authority to approve the final proposal should a preliminary review indicate the proposal has possible merit. The Turnpike Authority is under no obligation to consider any Value Engineering Proposal (Preliminary or Final) that is submitted.

A copy of the Final Value Engineering Proposal shall be submitted by the Design-Build Team to the Engineer and the NCDOT Value Engineering Office. The proposal shall contain, as a minimum, the following:

(A) A statement that the request for the modification is being made as a Value Engineering Proposal.

(B) A description of the difference between the existing contract requirements and the proposed modifications, with the comparative advantages and disadvantages of each.

(C) If applicable, a complete drawing of the details covering the proposed modifications and supporting design computations shall be included in the final submittal. The preparation of new designs or drawings shall be accomplished and sealed by a Professional Engineer licensed in the State of North Carolina. Further, the Turnpike Authority may require a review, and possibly the redesign, be accomplished by the project's original designer, or an approved equal. The Turnpike Authority may contract with private engineering firms, when needed, for reviews requested by the Turnpike Authority. The Design-Build Team shall contract with the original project designer, or an approved equal, when required by the Turnpike Authority, for any design work needed to completely and accurately prepare contract drawings. The Turnpike Authority may waive the requirements to have the preparation of contract drawings accomplished by a Professional Engineer or the project's original design based on the extent, detail, and complexity of the design needed to implement the value engineering proposal.

(D) An itemized list of the contract requirements that would be modified and a recommendation of how to make each modification.

(E) A detailed estimate of the cost of performing the work under the proposed modification.

(F) A statement of the time by which approval of the Value Engineering Proposal shall be issued by the Turnpike Authority to obtain the total estimate cost reduction during the remainder of the contract, noting any effect on the contract completion or delivery schedule.

To facilitate the preparation of revisions to contract drawings, the Design-Build Team may purchase reproducible copies of drawings for his use through the Department's Value Engineering Office. The preparation of new design drawings by or for the Design-Build Team shall be coordinated with the Turnpike Authority and the NCDOT Value Engineering Office. The Design-Build Team shall provide, at no charge to the Turnpike Authority, one set of reproducible drawings of the approved design needed to implement the value engineering proposal.

The Engineer will be the sole judge of the acceptability of a Value Engineering Proposal requested in accordance with these requirements and of the estimated net savings resulting from the approval of all or any part of the proposal. The Design-Build Team has the right to withdraw, in whole or in part, any Value Engineering Proposal not accepted by the Turnpike Authority within the period to be specified in the proposal per Item (F) of the preceding paragraph.

If a Value Engineering Proposal is approved, the necessary changes will be effected by Supplemental Agreement. Included as a part of the Supplemental Agreement will be requirements for price adjustment giving the Design-Build Team 50 percent of the net savings to the project resulting from the modifications.

The Turnpike Authority reserves the right to include in the Supplemental Agreement any conditions it deems appropriate for consideration, approval, and implementation of the proposal. Acceptance of the Supplemental Agreement by the Design-Build Team shall constitute acceptance of such conditions.

The final net savings to be distributed will be the difference in cost between the existing contract cost for the involved unit bid items and actual final cost occurring as a result of the modification. Only those unit bid items directly affected by the Supplemental Agreement will be considered in making the final determination of net savings. In determining the estimate net savings, the Turnpike Authority reserves the right to disregard the contract prices if, in the judgement of the Turnpike Authority, such prices do not represent a fair measure of the value of the work to be performed or to be deleted. Subsequent change documents affecting the modified unit bid items but not related to the Value Engineering Proposal will be excluded from such determination. The Turnpike Authority's review and administrative costs for value engineering proposals will be borne by the Turnpike Authority. The Design-Build Team's costs for designs and/or revisions to designs and the preparation of design drawings will be borne by the Design-Build Team. The costs to either party will not be considered in determining the net savings obtained by implementing the value engineering proposal. The Design-Build Team's portion of the net savings shall constitute full compensation to him for effecting all changes pursuant to the agreement. The net savings will be prorated, 50 percent for the Design-Build Team and 50 percent for the Turnpike Authority, for all accepted Value Engineering Proposals.

Upon execution of the Supplemental Agreement, the Turnpike Authority and the Department will thereafter have the right to use, duplicate or disclose in whole or in part any data necessary for utilization of the modification on other projects without obligation or compensation of any kind to the Design-Build Team. Restrictions or conditions imposed by the Design-Build Team for use of the proposal on other projects shall not be valid.

Except as may be otherwise precluded by this specification, the Design-Build Team may submit a previously approved value engineering proposal on another project.

Unless and until a Supplemental Agreement is executed and issued by the Turnpike Authority, the Design-Build Team shall remain obligated to perform the work in accordance with the terms of the existing contract.

Acceptance of the modification and its implementation will not modify the completion date of the contract unless specifically provided for in the Supplemental Agreement.

The Design-Build Team shall not be entitled to additional compensation under Section 104 for alterations in the plans or in the details of construction pursuant to the Value Engineering Proposal.

The Turnpike Authority will not be liable to the Design-Build Team for failure to accept or act upon any Value Engineering Proposal nor for any delays to the work attributable to any such proposal.

The Turnpike Authority reserves the right to negotiate desired changes with the Design-Build Team under the requirements of the contract even though the changes are the result of a Value

Engineering Proposal submitted on another contract. In this instance the savings will be prorated in accordance with the terms of the negotiated agreement.

SECTION 105
CONTROL OF WORK

105-1 AUTHORITY OF THE ENGINEER

The Engineer will decide all questions which may arise as to the quality and acceptability of materials furnished and work performed and as to the rate of progress of the work; all questions which may arise as to the interpretation of the contract; and all questions as to the acceptable fulfillment of the contract on the part of the Design-Build Team. His decision shall be final and he shall have executive authority to enforce and make effective such decisions and orders as the Design-Build Team fails to carry out promptly.

The Engineer shall have the authority to issue any written order to the Design-Build Team which he considers necessary to the prosecution of the work, and shall have executive authority to enforce such written orders as the Design-Build Team fails to carry out promptly. Failure on the part of the Design-Build Team to comply with any written order issued by the Engineer may be justification for disqualifying the Design-Build Team from further bidding on Turnpike Authority projects in accordance with Article 102-16.

105-2 PLANS AND WORKING DRAWINGS

The plans shall be supplemented by such approved working drawings as are necessary to adequately control the work. Working drawings furnished by the Design-Build Team and approved by the Engineer shall consist of such detailed drawings as may be required to adequately control the work. They may include stress sheets, shop drawings, erection drawings, falsework drawings, cofferdam drawings, bending diagrams for reinforcing steel, catalog cuts, or any other supplementary drawings or similar data required of the Design-Build Team. When working drawings are approved by the Engineer, such approval shall not operate to relieve the Design-Build Team of any of his responsibility under the contract for the successful completion of the work.

Changes on shop drawings after approval and/or distribution shall be subject to the approval of the Engineer and he shall be furnished a record of such changes.

105-3 CONFORMITY WITH PLANS AND SPECIFICATIONS

All work performed and all materials furnished shall be in reasonably close conformity with the lines, grades, cross sections, dimensions, and material requirements, including tolerances, shown in the contract.

In the event the Engineer finds the materials or the finished product in which the materials are used not within reasonably close conformity with the contract but that reasonably acceptable work has been produced, he will then make a determination if the work is to be accepted and remain in place. If the Engineer determines that the work is to be accepted, he will have the authority to make such adjustment in contract price as he deems warranted based upon his engineering judgment and the final estimate will be paid accordingly.

In the event the Engineer finds the materials or the finished product in which the materials are used or the work performed are not in reasonably close conformity with the contract and have resulted in an inferior or unsatisfactory product, the work or materials shall be removed and replaced or otherwise corrected by the Design-Build Team at no cost to the Turnpike Authority.

The Design-Build Team shall bear all the costs of providing the burden of proof that the nonconforming work is reasonable and adequately addresses the design purpose. The Design-Build Team shall bear all risk for continuing with nonconforming work in question until it is accepted.

The Engineer may impose conditions for acceptance of the nonconforming work. The Design-Build Team shall bear all costs for fulfilling the conditions.

The decisions whether the product satisfies the design purpose, whether the nonconforming work is reasonably acceptable and the conditions for acceptance are at the sole discretion of the Engineer.

105-4 COORDINATION OF PLANS, SPECIFICATIONS, SUPPLEMENTAL SPECIFICATIONS, AND SPECIAL PROVISIONS

The Request for Proposals, all Plans, the Standard Specifications, and all supplementary documents are essential parts of the contract and a requirement occurring in one is as binding as though occurring in all. They are intended to be complementary and to describe and provide for a complete work.

In case of discrepancy or conflict, the order in which they govern shall be as follows:

(A) Request for Proposals

(B) Technical Proposal from the Design-Build Team

(C) Accepted Plans and Details from the Design-Build Team, or sealed plans provided by the Department of Transportation or North Carolina Turnpike Authority, as applicable

(D) Standard Drawings

(E) Standard Specifications

Where dimensions on the plans are given or can be computed from other given dimensions they shall govern over scaled dimensions.

The Design-Build Team shall take no advantage of any error or omission in the plans, estimated quantities, or specifications. In the event the Design-Build Team discovers an error or omission, he shall immediately notify the Engineer.

105-5 COOPERATION BY DESIGN-BUILD TEAM

The Design-Build Team shall cooperate with the Engineer, his inspectors, and other contractors in every way possible, and shall give the work the constant attention necessary to facilitate the progress and satisfactory performance thereof. The Design-Build Team shall notify the Engineer in writing at least 7 calendar days prior to beginning work on the project. He shall notify the Engineer at least 1 calendar day in advance when work is to be suspended and at least 2 calendar days in advance when work is to be resumed.

The Design-Build Team shall keep available on the project site a copy of the contract assembly at all times.

105-6 SUPERVISION BY DESIGN-BUILD TEAM

(A) On Site Personnel

At all times that work is actually being performed, the Design-Build Team shall have present on the project one competent individual who has been authorized to act in a supervisory capacity over all work on the project including work subcontracted. The individual who has been so authorized shall be experienced in the type of work being performed and is to be fully capable of managing, directing, and coordinating the work, of reading and thoroughly understanding the contract, and of receiving and carrying out directions from the Engineer or his authorized representatives. He shall be an employee of the Design-Build Team, unless otherwise approved by the Engineer.

(B) On Call Personnel

At all times during the life of the project the Design-Build Team shall provide one permanent employee who shall have the authority and capability for the overall responsibility of the project and who shall be personally available at the site of work within 24 hours notice. Such employee shall be fully authorized to conduct all business with the subcontractors, to negotiate and execute all supplemental agreements, and to execute the orders or directions of the Engineer.

(C) Exceptions

If the Design-Build Team elects to have the employee described under (B) above constantly available in person on the project, then the presence of this employee will be considered as also meeting the requirements of (A) above. However, whenever such employee is absent from the project then an authorized individual meeting the requirements of (A) above shall be present on the project.

105-7 COOPERATION BETWEEN CONTRACTORS

The Turnpike Authority and the Department reserve the right at any time to contract for and perform other or additional work on or near the work covered by the contract.

When separate or additional contracts are let within the limits of any one project, each the Design-Build Team shall conduct his work so as not to interfere with or hinder the progress or completion of the work being performed by other contractors. Contractors working within the limits of the same project shall cooperate with each other.

Each Design-Build Team shall conduct his operations in such a manner as to avoid damaging any work being performed by others or which has been completed by others.

When a project is let under more than one contract and the plans and/or special provisions include a construction schedule, it shall be the responsibility of the Design-Build Teams to complete the various phases of the project in accordance with the time limits specified such that the total contracts will be completed by the completion date. This construction schedule will remain in effect until such time as the Contractors, at their option submit to the Engineer a joint construction schedule meeting the approval of the Engineer. This joint construction schedule shall be signed by authorized representatives of each firm and upon the approval of the Engineer shall be binding on each firm. Subsequent modifications to the joint construction schedule may be made during the course of the work in the same manner.

Failure of the Design-Build Team to complete the various phases of work within the time limits set forth in the construction schedule or latest approved joint construction schedule shall be just cause for removing the contractor(s) from the Department's list of qualified bidders. A contractor disqualified from bidding by reason of this provision will not be reinstated until such time as his progress is in accordance with the latest approved construction schedule or until the project is completed and accepted, whichever occurs first.

The Turnpike Authority and the Department will under no circumstances be liable for any claim for additional compensation due to acts of one contractor holding up the work of another.

The Department and the Turnpike Authority will under no circumstances be liable for any damages experienced by the Design-Build Team as a result of the presence and operations of other contractors working within the limits of the same project.

105-8 COOPERATION WITH UTILITY OWNERS

Prior to the beginning of construction, the Turnpike Authority will notify all utility owners known to have facilities affected by the construction of the project and will make arrangements for the necessary adjustments of all affected public or private utility facilities. The utility adjustments may be made either before or after the beginning of construction of the project. The adjustments will be made by the utility owner or his representative, or by the Design-Build Team when such adjustments are part of the work covered by his contract.

Unless otherwise stipulated in the RFP, the Design-Build Team shall use an independent utility locating service to locate utilities. The Design-Build Team shall use special care working in, around and near all existing utilities that are encountered during construction, protecting them where necessary so that they will give uninterrupted service.

The Design-Build Team shall cooperate with the utility owner, and/or the owner's representative in the adjustment or placement of utility facilities when such adjustment or placement is made necessary by the construction of the project or has been authorized by the Turnpike Authority.

In the event that utility services are interrupted by the Design-Build Team, the Design-Build Team shall promptly notify the owners and shall cooperate with the owners and/or the owner's representative in the restoration of service in the shortest time possible.

Existing fire hydrants shall be kept accessible to fire departments at all times.

Prior to submitting his Price Proposal, the Design-Build Team shall make his own determination as to the nature and extent of the utility facilities, including proposed adjustments, new facilities, or temporary work to be performed by the utility owner or his representative; and as to whether or not any utility work is planned by the owner in conjunction with the project construction. The Design-Build Team shall consider in his Price Proposal all of the permanent and temporary utility facilities in their present or relocated positions, whether or not specifically shown on the plans or covered in the project special provisions. It will be the Design-Build Team's responsibility to anticipate any additional costs to him resulting from such utility work and to reflect these costs in his Price Proposal for the various items in the contract.

No additional compensation except as provided for in Article 104-4 will be allowed for delays, inconvenience, or damage sustained by the Design-Build Team due to any interference from said utility facilities or the operation of moving them and any such delay, inconvenience, or damage except as provided for in Article 104-4 shall not constitute a basis for a claim for additional compensation.

Where changes to utility facilities are to be made solely for the convenience of the Design-Build Team, it shall be the Design-Build Team's responsibility to arrange for such changes and the Design-Build Team shall bear all costs of such changes.

105-9 CONSTRUCTION STAKES, LINES, AND GRADES

The Design-Build Team shall be responsible for any surveying, construction staking and layout required in the performance of the work. He will be responsible for the accuracy of lines, slopes, grades and other engineering work which he provides under this contract. Unless otherwise specified in the Request for Proposals, no measurement or direct payment will be made for this work. The cost shall be considered as included in other contract items.

105-10 AUTHORITY AND DUTIES OF THE INSPECTOR

Inspectors employed by the Turnpike Authority are authorized to inspect all work performed and materials furnished. Such inspection may extend to all or any part of the work and to the preparation, fabrication, or manufacture of the materials to be used. The inspector is not authorized to alter or waive the requirements of the contract. The inspector is not authorized to issue instructions contrary to the contract, or to act as foreman for the Design-Build Team; however, he has the authority to reject work or materials until any questions at issue can be referred to and decided by the Engineer. The inspector is not authorized to make any final acceptance of the work.

105-11 INSPECTION OF WORK

All materials and each part or detail of the work shall be subject to inspection by the Engineer. The Design-Build Team shall allow and provide a reasonable access to all parts of the work to the Engineer or his authorized representative. The Design-Build Team shall also furnish such information and assistance as is required to make a complete and detailed inspection. Such access shall meet the approval of the Engineer.

The presence of the Engineer or inspector at the work site shall in no way lessen the Design-Build Team's responsibility for conformity with the contract. Should the Engineer or Inspector, prior to or during construction, fail to point out or reject materials or work that does not conform with the contract, whether from lack of discovery or for any other reason, it shall in no way prevent later rejection or corrections to the unsatisfactory materials or work when discovered. The Design-Build Team shall have no claim for losses suffered due to any necessary removals or repairs resulting from the unsatisfactory work.

If the Engineer requests it, the Design-Build Team, at any time before acceptance of the work, shall remove or uncover such portions of the finished work as may be directed. After examination, the Design-Build Team shall restore said portions of the work to the standard required by the specifications. The Design-Build Team shall keep cost records of the work performed and if the uncovered work is found to be acceptable, the Turnpike Authority will pay the Design-Build Team on a force account basis in accordance with Article 109-3 for the cost of uncovering, or removing, and the replacing of the covering or making good of the parts removed; but should the work so exposed or examined prove unacceptable, the uncovering, or removing, and the replacing of the covering or making good of the parts removed, shall be at no cost to the Turnpike Authority.

When any other unit of government or political subdivision is to pay a portion of the cost of the work covered by the contract, its respective representatives shall have the right to inspect the

work. When work is to be performed on the right of way of any railroad corporation or in proximity to other public utilities, the representatives of the railroad corporation and/or the public utilities shall have the right to inspect the work. Such inspection shall in no sense make any unit of government or political subdivision or any railroad corporation or public utility a party to the contract, and shall in no way interfere with the rights of either party thereunder.

105-12 UNAUTHORIZED WORK

No work shall be performed without established lines and grades except as otherwise permitted by the Engineer. Work performed contrary to the instructions of the Engineer or contrary to any approvals granted by the Engineer will be considered as unauthorized and may not be paid for under the requirements of the contract. Work performed beyond the lines shown on the plans or as given, except as herein specified, or any extra work performed without authority will be considered as unauthorized and may not be paid for under the requirements of the contract. Any of the above work so performed may be ordered removed, replaced, or repaired at no cost to the Turnpike Authority.

Upon failure on the part of the Design-Build Team to comply promptly with any order of the Engineer made under the provisions of this article, the Engineer will have the authority to cause such unauthorized work to be removed and/or adjusted to conform to the requirements of the contract and to deduct the cost of removal and/or adjustment from any monies due or to become due the Design-Build Team.

105-13 LIMITATIONS OF OPERATIONS

At any time when, in the opinion of the Engineer, the Design-Build Team has obstructed, closed, or is conducting operations on a greater portion of the work than is necessary for the prosecution of the work so as to constitute a hazard to the general public or impair the function of the facility being constructed where traffic shall be maintained, the Engineer may require the Design-Build Team to suspend such unnecessary operations or closures and to finish the portions on which work is in progress before starting work on additional portions of the work.

105-14 NIGHT WORK

Whenever the Design-Build Team's operations are being conducted at night, the Design-Build Team shall provide such artificial lighting as may be necessary to provide for safe and proper construction and to provide for adequate inspection of the work as described in Section 1413.

105-15 RESTRICTION OF LOAD LIMITS

The Design-Build Team shall comply with all legal load restrictions in hauling equipment and materials on roads under the jurisdiction of the Department or the Turnpike Authority.

The Department and the Turnpike Authority have the right to place load limit restrictions on the load a Design-Build Team may haul on any road or bridge in the vicinity of his contract. The Design-Build Team, prior to bidding on a project, will be responsible for making his own investigations to determine the possibility of load limit restrictions being placed on any of the highways he plans to use for hauling purposes. The Design-Build Team shall not be entitled to an extension of time or to compensation for any costs, inconvenience, delay, or any other adversity to the Design-Build Team as the result of any reduction by the Department or Turnpike Authority in load limit, or as the result of a refusal by the Department or Turnpike Authority to

raise load limits as hereinafter provided or under any other conditions, and any such reduction in load limit or refusal to raise load limits shall not constitute a basis for a claim for additional compensation.

Wherever load limit restrictions below the statutory legal load limit have been posted on any roads and/or bridges on the project or within the vicinity of the project, the Department or Turnpike Authority may remove the load limit restrictions from such roads and/or bridges upon written request from the Design-Build Team; and the Design-Build Team thereafter will be allowed to haul up to the statutory legal limits over such roads and/or bridges, provided the Design-Build Team enters into an agreement with the Department or Turnpike Authority providing for:

(A) Maintenance by the Design-Build Team of such roads in a condition satisfactory to the Engineer during the haul period.

(B) Repair by the Design-Build Team of all damages to such roads after haul is completed to place them in a condition as good as they were prior to removal of the load limits.

(C) Furnishing bond by the Design-Build Team in an amount determined by the Engineer for the roads. Furnishing a bond for the roads does not entitle the Design-Build Team to exceed the posted load limits of any bridge.

(D) Assumption by the Design-Build Team of all costs of strengthening any bridges that may be necessary in order to safely haul loads up to statutory legal limits. The Department or the Turnpike Authority will, upon request by the Design-Build Team, make a determination as to the method and extent of strengthening required for the bridges and will advise the Design-Build Team as to the amount of work to be done or an estimate of the charges for the work if performed by Department or Turnpike Authority forces. When Department or Turnpike Authority forces perform the work, the Design-Build Team shall reimburse the Department or Turnpike Authority in the amount of the actual charges for said work. When Design-Build Team's forces perform the work, it shall be done in accordance with plans approved by the Engineer and under his inspection.

(E) Indemnification of the Department and the Turnpike Authority against any and all claims from third persons arising out of or resulting from the hauling operation or the maintenance, or lack of maintenance, of haul roads. Haul roads shall be maintained not only for the Design-Build Team's hauling operations, but also for the use of the general public.

Equipment operated on proposed bridges shall comply with the following load restrictions.

Maximum axle load (lbs.) 36,000
Maximum axle load on tandem axles (lbs.) 30,000
Maximum gross load (lbs.) 90,000

The Design-Build Team shall keep the bridge floor clean to reduce impact forces and place approved temporary guides on the bridge floor to position the wheel loads as nearly as possible over the bridge girders. Only one earth-moving vehicle shall be on a bridge at any time. Upon completion of hauling over each bridge, the Design-Build Team shall clean the bridge floor, curbs and rails.

Regulations pertaining to size and weight will not apply to equipment used on the project provided the vehicles involved are not operated on pavement, completed base course, or structures.

105-16 FAILURE TO MAINTAIN THE PROJECT OR PERFORM EROSION CONTROL WORK

Failure on the part of the Design-Build Team to comply with the requirements of Article 104-10 or to perform erosion control work as directed will result in the Engineer notifying the Design-Build Team to comply with these Specifications. In the event that the Design-Build Team fails to begin such remedial action or fails to begin erosion control work within 24 hours after receipt of such notice with adequate forces and equipment, the Engineer may proceed to have the work performed with other forces. No payment will be made to the Design-Build Team for work performed by others. Any costs incurred by the Turnpike Authority or the Department for work performed by others as provided above in excess of the costs that would have been incurred had the work been performed by the Design-Build Team will be deducted from monies due the Design-Build Team on his contract.

105-17 INSPECTION AND ACCEPTANCE

Upon apparent completion of the entire project, the Engineer will inspect the project for final acceptance. If all construction provided for and contemplated by the contract is found to be satisfactorily completed, the project will be accepted. The acceptance of projects in their entirety will not be altered except as listed below:

(A) When any continuous project is equal to or in excess of 5 miles in length, the Turnpike Authority will accept the project in 2 increments with the first increment equaling at least 50 percent of the total length of the project.

(B) When it is considered to be in the best interest of the Turnpike Authority, other increments or parts of projects may be considered for acceptance.

(C) When the contract contains an intermediate completion date requiring the completion of a portion of the work in its entirety, such portion of the work may be accepted if requested in writing by the Design-Build Team.

(D) Bridge decks and rails that have been constructed or rehabilitated at such time as when they are open to public traffic.

(E) Permanent sign panels, including hardware and retroreflective sheeting, that are required prior to the final acceptance of the project by the Traffic Control Plans or by the Engineer when the roadway where the signs are located is open to public traffic.

Acceptance of any increment or part of a project shall not operate to waive the assessment of all or any portion of liquidated damages assessable under the terms of the contract.

When the inspection discloses any work, in whole or in part, as being unsatisfactory or incomplete, the Engineer will advise the Design-Build Team of such unsatisfactory or incomplete work, and the Design-Build Team shall immediately correct, repair, or complete such work. The project will not be accepted and the Design-Build Team shall be responsible for the maintenance of the project and maintenance of traffic until all of the recommendations made at the time of the inspection have been satisfactorily completed.

The Engineer will notify the Design-Build Team in writing that the project has been accepted as soon as practicable after the completion of the project. When an observation period(s) is required that extends beyond the final acceptance date, the satisfactory completion of the observation period(s) shall be covered by the contract bonds.

SECTION 106
CONTROL OF MATERIAL

106-1 GENERAL REQUIREMENTS

(A) GENERAL

The materials used on the work shall meet all requirements of the contract and shall be subject to inspection, test, or rejection by the Engineer at any time. Materials used in the work shall be new or recycled as permitted by the Specifications.

It is the Turnpike Authority's intent to expand the use of recovered materials in its construction programs. The Design-Build Team is encouraged to find innovative and alternative ways for beneficial use of recyclable materials that are currently a part of the solid waste stream and that contribute to problems of declining space in landfills.

The Design-Build Team shall make his own determination of the various kinds and quantities of materials that are necessary for the acceptable performance and timely completion of the work. It will be the Design-Build Team's responsibility to obtain materials that will meet the requirements of the contract. The Design-Build Team shall be responsible for the acceptability of all materials used in the work and for the timely delivery of materials to the project so that adequate time will be available for the safe and proper performance of the work.

In order to facilitate testing by the Department and the Turnpike Authority, the Design-Build Team shall furnish a complete statement of the origin of all materials to be used in the construction of the work, together with samples when required. The statement of origin shall be furnished to the Engineer sufficiently in advance of any shipment and/or fabrication of materials so that arrangements can be made for proper inspection.

The Design-Build Team shall furnish a material safety data sheet with all paints and hazardous chemicals proposed for use on the project. The material safety data sheet shall be in accordance with the North Carolina Hazard Communication Standard (13 NCAC 7CF.0101.(a)(99)).

The Design-Build Team shall provide access, means, and assistance in the verification of all testing equipment, scales, measures, and other devices operated by him in connection with the testing of the materials.

If the Design-Build Team desires or is required to furnish materials from local deposits, other than those, if any, described in the contract he shall assume full responsibility for the sampling of the sources and the acceptability of the material in accordance with these specifications. He shall furnish without charge such preliminary samples as may be required; except that, if requested in writing, the Engineer may allow Turnpike Authority or Department forces to take samples as requested by the Design-Build Team. In the latter case, the Design-Build Team shall reimburse the Turnpike Authority or Department for the total expense of the sampling as determined by the Engineer. Tests will be made and reports rendered, but it is understood that such tests shall in no way be construed as a guarantee of acceptance of any material that may be delivered later for incorporation in the work. The Design-Build Team shall assume full responsibility for the production of

uniform and satisfactory materials from such local deposits, and shall indemnify and save harmless the Department and Turnpike Authority from any and all claims for loss or damages resulting from the opening and operation thereof, or from the failure of the deposit after development to produce materials acceptable to the Engineer, in either quality or quantity.

(B) DOMESTIC STEEL

All steel and iron products which are permanently incorporated into this project shall be produced in the United States except minimal amounts of foreign steel and iron products may be used provided the combined project cost of the bid items involved does not exceed 0.1 percent of the total amount bid for the entire project or $2,500.00, whichever is greater. This minimal amount of foreign produced steel and iron products permitted for use is not applicable to fasteners. Domestically produced fasteners are required for this project.

All steel and iron products furnished as domestic products shall be melted, cast, formed, shaped, drawn, extruded, forged, fabricated, produced, or otherwise processed and manufactured in the United States. Raw materials including pig iron and processed pelletized and reduced iron ore used in manufacturing domestic steel products may be imported; however, all manufacturing processes to produce the products, including coatings, shall occur in the United States.

Before each steel or iron product is incorporated into this project or included for partial payment on a monthly estimate, the Design-Build Team shall furnish the Engineer a notarized certification certifying that the product conforms to the above. The Engineer will forward a copy of each certification to the Engineer.

Each purchase order issued by the Design-Build Team or a subcontractor for steel and iron products to be permanently incorporated into this project shall contain in bold print a statement advising the supplier that all manufacturing processes to produce the steel or iron shall have occurred in the United States. The Design-Build Team and all affected subcontractors shall maintain a separate file for steel products permanently incorporated into this project so that verification of the Design-Build Team's efforts to purchase domestic steel and iron products can readily be verified by an authorized representative of the Turnpike Authority or the Federal Highway Administration.

106-2 SAMPLES, TESTS, AND CITED SPECIFICATIONS

All tests will be made in accordance with the most recent standard or interim methods of the AASHTO in force on the date of advertisement. Should no AASHTO method of test exist for a material, the most recent standard or tentative method of ASTM or other methods adopted by the Department will be used.

All reference made to a specification published by AASHTO, ASTM, or any other organization other than the Department or the Turnpike Authority, which does not indicate the date of publication, will be understood to mean the specification current on the date of advertisement for the project. When a more current specification is published during the life of the project, and when it is mutually agreed by the Design-Build Team and the Engineer and such

agreement is documented by a supplemental agreement, the Turnpike Authority may accept materials meeting the requirements of the latest publication.

Prior to beginning construction, the Design-Build Team shall provide a Table of Quantities as described in Article 101-3 of these specifications.

The Table of Quantities Work Items shall correspond to Pay Items as defined in the Standard Specifications. These Work Items have associated Materials and Conversion Factors. For non-standard Work Items, a Generic Work Item with the correct Unit of Measure and in an appropriate category will be used. For example, "GENERIC TRAFFIC CONTROL ITEM – EA" or "GENERIC RETAINING WALL ITEM – LF". For these Generic Work Items, Materials must be defined and appropriate conversion factors submitted

An initial Table of Quantities shall be submitted not less than 30 calendar days after the date of award. The Table of Quantities shall be updated and resubmitted within 14 days of when a set of Plans is sealed as Release for Construction (RFC) plans, and whenever there are substantial changes to the Quantities on previously incorporated RFC plans.

106-3 DESIGN-BUILD TEAM FURNISHED CERTIFICATION

The Design-Build Team shall furnish the material certifications obtained from the producer, supplier, or an approved independent testing laboratory for the following types of materials, unless otherwise directed by the Engineer.

(A) Materials required to meet criteria documented by tests that are normally performed during the production process.

(B) Materials that are required to meet specifications other than those published by AASHTO, ASTM, the Division of Highways, or the Turnpike Authority.

(C) Materials produced at locations that are not within routine travel distance for Department or Turnpike Authority representatives.

(D) Materials required to meet criteria documented by tests involving special equipment not readily available to Department or Turnpike Authority representatives.

(E) Any other special material when so directed by the Engineer.

(F) Material certifications of one of the following types shall be furnished for pre-tested materials. The specific type of material certification for each material shall be in accordance with the schedule maintained by the NCDOT Materials and Tests Unit. Copies of this schedule may be obtained from the NCDOT Materials and Tests Unit.

Type 1 - Certified Mill Test Report

A certified mill test report shall be a certified report of tests conducted by the manufacturer on samples taken from the same heat or lot number as the material actually shipped to the project. The report shall identify the heat or lot number.

Type 2 - Typical Certified Mill Test Report

A typical certified mill test report shall be a certified report of tests conducted by the manufacturer on samples taken from a lot which is typical of the material actually shipped to the project, but which may or may not be from the lot shipped.

Type 3 - Manufacturer's Certification

A manufacturer's certification shall be a certified statement that the material actually shipped to the project was manufactured by production processes which are periodically and routinely inspected to assure conformance to specification requirements.

Type 4 - Certified Test Reports

A certified test report shall be a certified report of test conducted by an approved independent testing laboratory on samples taken from same heat or lot number as the material actually shipped to the project. The report shall identify the heat or lot number.

Type 5 - Typical Certified Test Reports

A certified test report shall be a certified report of tests conducted by an approved independent testing laboratory on samples taken from a lot which is typical of the material actually shipped to the project, but which may or may not be from the lot shipped.

Type 6 - Supplier's Certification

A supplier's certification is a signed statement by the supplier that the material described in the certification is of the specification grade required and that the supplier has on hand Type 1, Type 2, or Type 3 material certifications to cover the material which is included in the Type 6 supplier's certification.

Type 7 - Design-Build Team's Certification

Design-Build Team's certification is a signed statement by a Design-Build Team that the used material described in the certification meets the requirements of the current specifications to the best of the Design-Build Team's knowledge and that the Design-Build Team had in his possession at the time of purchase a Type 1, 2, or 3 materials certification to cover the material which is included in the Type 7 Design-Build Team's Certification.

106-4 DELIVERY AND HANDLING OF MATERIALS

All materials shall be handled carefully and in such manner as to preserve their quality and fitness for the work. Materials damaged during delivery or handling shall not be used without approval of the Engineer.

106-5 STORAGE OF MATERIALS

Materials shall be stored so as to insure the preservation of their quality and fitness for the work. Stored materials, which may have been approved before storage, shall be subject to inspection at any time, and shall meet the requirements of the specifications at the time they are put into use. Stored materials shall be so located as to facilitate their inspection. Subject to the approval of the Engineer, that portion of the right of way not required for public travel may be used for storage purposes and for the Design-Build Team's plant and equipment, but any additional space required therefor shall be provided by the Design-Build Team at no expense to the Department or Turnpike Authority. All storage sites located within the right of way shall be restored to their original condition by the Design-Build Team at no expense to the Department or

Turnpike Authority, except where the materials stored are or are to become the property of the Department or the Turnpike Authority.

106-6 INSPECTION AT SOURCE

The Engineer may undertake the inspection of materials at the source of supply. Where approved by the Engineer, the results of tests performed by private laboratories, producers, or manufacturer's laboratories may be used in determining compliance of a material or product with the contract.

The Engineer assumes no obligation to inspect materials at the source of supply and such inspection will be undertaken only upon condition that:

(A) The cooperation and assistance of the Design-Build Team and the producer with whom he has contracted for materials is assured.

(B) The representative of the Engineer will have full entry at all times to such parts of the plant as may concern the manufacture or production of the materials.

(C) Laboratory facilities shall be provided when required by the Engineer.

Where the Department and Turnpike Authority agree to inspect or test materials during their production or at the source of supply, the Design-Build Team shall bear the cost of testing performed on materials ordered by him but not incorporated into the project. For items normally pretested by the Department, the Design-Build Team shall provide a minimum of 30 days notice prior to the beginning of production of the items for this project along with final approved shop drawings.

The Department and the Turnpike Authority reserve the right to retest all materials which have been tested and accepted at the source of supply after the same have been delivered, and to reject all materials which, when retested, do not meet the requirements of the specifications.

106-7 SCALES AND PUBLIC WEIGHMASTER

When material is to be paid for on a ton basis, the Design-Build Team shall furnish platform scales or other weighing devices which have been certified by the N. C. Department of Agriculture. If the platform scales or other weighing devices are located outside of North Carolina, they shall have been certified by the Department of Agriculture within the particular state. The scales may be constructed and operated to provide automatic weighing, recording, and printing of tickets for the load being weighed.

The Turnpike Authority may deny or withhold any portion of payment for any load of materials weighed if in relation to such load of materials, the Design-Build Team falsifies any weighing certification information or otherwise fails to comply with the requirements contained in this contract.

All scales shall be operated by a public weighmaster licensed in accordance with *Chapter 81A of the General Statutes of North Carolina*. A certified weight certificate shall be issued by a North Carolina public weighmaster for each load. The certificate shall be in the form of a ticket furnished by the Design-Build Team and shall contain the following information:

(A) Turnpike Authority contract number

(B) Date

(C) Time issued, if for bituminous plant mix or portland cement stabilized base course mixed in a central plant

(D) Type of material

(E) Gross weight

(F) Tare weight

(G) Net weight of material

(H) Quarry or plant location

(I) Division of Highways' Job Mix Formula Number, if ticket is for asphalt plant mix

(J) Division of Highways' Asphalt Plant Certification Number, if ticket is for asphalt plant mix

(K) Truck number

(L) Design-Build Team's name

(M) Public weighmaster's stamp or number

(N) Public weighmaster's signature or initials

When certified weighing devices other than platform scales are to be used, the gross weight and tare weight will not be required.

The Engineer may direct the Design-Build Team to re-weigh the contents of any truck load that is to be delivered to the work on approved platform scales at no cost to the Turnpike Authority.

When tractor and trailer units are to be utilized in hauling material to be weighed, the platform scales shall be of sufficient length so as to accommodate the entire unit or the tractor shall be disconnected and the trailer and its contents weighed as a separate unit.

106-8 DEPARTMENT FURNISHED MATERIAL

The Design-Build Team shall furnish all materials necessary to complete the work, except those materials specified in the contract to be furnished by the Turnpike Authority. Payment at the contract price for the item which includes the use of Turnpike Authority furnished material will be full compensation for all costs of handling and placing such materials after they are delivered or made available to the Design-Build Team.

The Design-Build Team will be held responsible for all material furnished to him, and deductions will be made from any money due him to make good any shortage and deficiencies from any cause whatsoever and for any damage which may occur after Turnpike Authority furnished material has been made available.

106-9 DEFECTIVE MATERIAL

All materials which are not in reasonably close conformity to the requirements of the specifications shall be considered as defective and such materials, whether in place or not, shall be rejected and are to be removed from the site of the work unless otherwise permitted by the Engineer in accordance with Article 105-3. No rejected material, the defects of which may have been substantially corrected, may be used until approval has been given by the Engineer.

106-10 DENSITY DETERMINATION BY NUCLEAR METHODS

Application:

The Engineer may, at his option, use nuclear methods as described in Article 520-9 and 610-10 to determine the density of selected pavement materials. The use of nuclear methods will include the establishment of the required density through the use of control strips constructed from materials actually being used on the project, and the determination of the density being obtained in test sections located throughout the project.

SECTION 107
LEGAL RELATIONS AND RESPONSIBILITY TO PUBLIC

107-1 LAWS TO BE OBSERVED

The Design-Build Team shall remain fully informed of all Federal and State laws, all local laws, ordinances, and regulations, and all orders and decrees of bodies or tribunals having any jurisdiction or authority which may in any manner affect those engaged or employed in the work or which in any way affect the conduct of the work. He shall at all times observe and comply with all such laws, ordinances, regulations, orders, and decrees; and shall indemnify and hold harmless the Authority Board, Turnpike Authority, NCDOT Board of Transportation and the Department of Transportation and their agents and employees from any claim or liability arising from or based on the violation of any such law, ordinance, regulation, order, or decree, by the Design-Build Team or by his agents and employees.

Comply with all Federal, State and local regulations when performing building removal and/or asbestos removal and disposal. Any fines resulting from violations of any regulation are the sole responsibility of the Design-Build Team and the Design-Build Team agrees to indemnify and hold harmless the Department and the Turnpike Authority against any assessment of such fines.

107-2 ASSIGNMENT OF CLAIMS VOID

In accordance with G.S. 143-3.3, the Turnpike Authority will not recognize any assignment of claims by any Design-Build Team against the Turnpike Authority.

107-3 PERMITS AND LICENSES

The Design-Build Team shall procure all permits and licenses except as otherwise specified; pay all charges, fees, and taxes; and give all notices necessary and incident to the due and lawful prosecution of the work.

For asphalt plants and concrete batch plants located on Department or Turnpike Authority rights-of-way, apply for and obtain all environmental permits and licenses, including stormwater permits, for plants prior to placement within the project limits or elsewhere on Department or Turnpike Authority rights-of-way. Use proven Best Management Practices and equip all plants with such pollution control equipment and devices as is necessary to meet all applicable local, State and Federal pollution requirements. Conduct compliance monitoring and report findings to each applicable environmental regulatory agency according to their required frequency.

107-4 PATENTED DEVICES, MATERIALS, AND PROCESSES

If the Design-Build Team employs any design, device, material, or process covered by letters of patent or copyright, he shall provide for such use by suitable legal agreement with the patentee or owner. The Design-Build Team and his surety shall indemnify and save harmless the Department and the Turnpike Authority from any and all claims for infringement by reason of the use of such patented design, device, material, process, trademark, or copyright, and shall indemnify and save harmless the Department and Turnpike Authority from any costs, expenses, and damages which it may be obligated to pay at any time during the prosecution or after the completion of the work by reason of any infringement.

107-5 ENCROACHMENT ON RIGHT OF WAY

Any individual, firm, or corporation wishing to encroach on highway right of way shall secure a written permit from the Department or the Turnpike Authority. The Design-Build Team is not authorized to allow any individual, firm, or corporation to perform any work within the limits of the project unless such work has been authorized in writing by the Engineer.

When so directed by the Engineer, the Design-Build Team shall make any repairs necessary due to such encroachments and such work will be paid for as extra work.

107-6 FEDERAL PARTICIPATION

When the United States Government pays all or any portion of the cost of the work, the Federal laws authorizing such participation and the rules and regulations made pursuant to such laws shall be observed by the Design-Build Team. The work will be subject to the inspection of the representative of such Federal agencies as are created for the administration of these laws. The Design-Build Team shall have no right to make the Federal Government a party to any court action solely by reason of its participation in the cost of the work or by reason of its inspection of the work.

107-7 SANITARY PROVISIONS

Provide and maintain in a neat, sanitary condition such accommodations for the use of employees as may be necessary to comply with the requirements of the State and local Board of Health, or of other bodies or tribunals having Control and manage disposal of sanitary waste such that no adverse impacts occur to water quality.

107-8 PUBLIC CONVENIENCE AND SAFETY

The Design-Build Team shall at all times so conduct his work as to insure the least possible obstruction to traffic. The safety and convenience of the general public and the residents along the highway, and the protection of persons and property, shall be provided for by the Design-Build Team as specified in Section 150.

107-9 COORDINATION WITH RAILWAY

All work to be performed by the Design-Build Team on railway right of way shall be performed in accordance with the contract and in a manner satisfactory to the railway company, and shall be performed at such times and in such manner as not to unnecessarily interfere with the movement of traffic upon the track of the railway company. The Design-Build Team shall use all care and precautions in order to avoid accidents, damage, or unnecessary delays or interference with the railway company's traffic or other property. The Design-Build Team shall

carry such railroad protective insurance and public liability and property damage insurance as may be stipulated in the contract.

When the Design-Build Team is required by the contract to transport materials or equipment across the tracks of any railway or to perform work on railway right of way, the Turnpike Authority will obtain any necessary written authority from the railway company for the establishment of a railway crossing or for the performance of work on railway right of way. The Design-Build Team will not be required to bear the cost of any watchman service or flagging protection necessary due to such operations, as the railway company will be reimbursed directly by the Turnpike Authority for the cost of such work.

In case the Design-Build Team elects or finds it necessary to transport materials or equipment across the tracks of any railway at any point where a crossing is not required by the contract or at any point other than an existing public crossing, he shall obtain specific written authority from the railway company for the establishment of a private railway crossing and shall bear all costs in connection with such crossing, including installation, drainage, maintenance, any necessary insurance, watchman service, flagging protection, and removal of such private railway crossing.

107-10 WORK IN, OVER, OR ADJACENT TO NAVIGABLE WATERS

All work in or over navigable waters shall be in accordance with conditions contained in the permit obtained by the Turnpike Authority from the authority granting the permit. These conditions will be included in the contract. The work shall be performed in such manner so as not to interfere with navigation of the waterway unless approval therefor is obtained from the authority granting the permit.

The Design-Build Team shall prepare drawings necessary to obtain any addenda which may be required for his operations which are not included in the Turnpike Authority's permit. He shall coordinate their submission with the Engineer.

107-11 USE OF EXPLOSIVES

When the use of explosives is necessary for the prosecution of the work, the Design-Build Team shall exercise the utmost care not to endanger life or property. The Design-Build Team shall be responsible for any and all damage or injury to persons or property resulting from the use of explosives. Such responsibility shall include, but shall in no way be limited to all damages arising from all forms of trespass to adjacent property as a result of blasting by the Design-Build Team. The Design-Build Team will not be held responsible for damage to adjacent landowner's wells or springs provided the Design-Build Team has used reasonable care and has taken reasonable precautions to prevent such damage.

All explosives shall be stored in a secure manner, in compliance with all laws, and all such storage places shall be marked clearly *DANGEROUS EXPLOSIVES*.

The Design-Build Team shall notify each public utility company having facilities in close proximity to the site of the work of his intention to use explosives. This notice shall be given sufficiently in advance to enable the utility companies to take whatever steps they may consider necessary to protect their property from injury. The Design-Build Team shall also give the Engineer, all occupants of adjacent property, and all other contractors working in or near the project notice of his intention to use explosives. Motorists shall be notified in accordance with Article 1101-10.

The Design-Build Team shall submit a blasting plan to the Engineer within 24 hours after each shot. The blasting plan shall contain the full details of the drilling and blasting patterns unless otherwise approved by the Engineer, and shall contain the following information:

(A) station limits of shot,

(B) plan of drill hole pattern, blast hole spacing, blast hole diameters and free face,

(C) initiation sequence of blastholes including delay timers and delay system,

(D) manufacturers' data sheet for all explosives, primers, and initiators employed,

(E) loading diagram showing type and amount of explosives, primers, initiators, and location and depth of stemming.

The blasting plan submitted is for quality control and record keeping purposes. Review by the Engineer shall not relieve the Design-Build Team of his responsibilities as provided in Article 107-12.

107-12 PROTECTION AND RESTORATION OF PROPERTY

The Design-Build Team shall be responsible for the protection from his activities of all public and private property on and adjacent to the work and shall use every reasonable precaution necessary to prevent damage or injury thereto. He shall use suitable precautions to prevent damage to pipes, conduits, and other underground structures, and to poles, wires, cables, and other overhead structures.

The Design-Build Team shall protect carefully from disturbance or damage all land monuments and property markers until the Engineer has witnessed or otherwise referenced their location and shall not remove them until directed.

The Design-Build Team shall be responsible for the removal, preservation, and resetting of all mailboxes disturbed by the construction operations. The mailboxes and their supports, when reset, shall be left in as good a condition as they were before removal. The Design-Build Team will not be required to furnish new material except as required to repair damage resulting from construction operations.

The Design-Build Team will be held responsible for all damage or injury to property of any character resulting from any act, omission, negligence, or misconduct in the prosecution of the work. When any direct or indirect damage or injury is done to public or private property by or on account of any act, omission, negligence, or misconduct in the execution of the work, he shall either restore at his own expense such property to a condition similar or equal to that existing before such damage or injury was done, or shall make good such damage or injury in a manner acceptable to the owner of the damaged property and to the Turnpike Authority. In case of failure on the part of the Design-Build Team to restore such property or make good such damage or injury the Turnpike Authority may at the Design-Build Team's expense repair, rebuild, or otherwise restore such property in such manner, as the Engineer may consider necessary.

107-13 CONTROL OF EROSION, SILTATION, AND POLLUTION

(A) General

The Design-Build Team shall take whatever measures are necessary to minimize soil erosion and siltation, water pollution, and air pollution caused by his operations. The Design-Build Team shall also comply with the applicable regulations of all legally

constituted authorities relating to pollution prevention and control. The Design-Build Team shall keep himself fully informed of all such regulations that in any way affect the conduct of the work, and shall at all times observe and comply with all such regulations. In the event of conflict between such regulations and the requirements of the specifications, the more restrictive requirements shall apply.

The Engineer will limit the area over which clearing and grubbing, excavation, borrow, and embankment operations are performed whenever the Design-Build Team's operations do not make effective use of construction practices and temporary measures which will minimize erosion, or whenever construction operations have not been coordinated to effectively minimize erosion, or whenever permanent erosion control features are not being completed as soon as permitted by construction operations.

Following completion of any construction phase or operation, on any graded slope or any area greater than one acre, the Design-Build Team shall provide ground cover sufficient to restrain erosion within 21 calendar days or within a time period specified by the Sedimentation and Pollution Control Act. The ground cover shall be either temporary or permanent and the type specified in the contract.

(B) Erosion and Siltation Control

The Design-Build Team shall exercise every reasonable precaution throughout the life of the project to prevent the eroding of soil and the silting of rivers, streams, lakes, reservoirs, other water impoundments, ground surfaces, or other property.

Prior to suspension of operations on the project or any portion thereof, the Design-Build Team shall take all necessary measures to protect the construction area, including but not limited to borrow sources, soil type base course sources, and waste areas, from erosion during the period of suspension.

Unless otherwise approved in writing by the Engineer, construction operations in rivers, streams, and water impoundments shall be restricted to those areas where channel changes are shown on the plans and to those areas which must be entered for the construction or removal of temporary or permanent structures.

Excavated materials shall not be deposited, nor shall earth dikes or other temporary earth structures be constructed, in rivers, streams, or impoundments. As an exception to the above, confined earth materials will be permitted when approved in writing by the Engineer.

Frequent fording of live streams with construction equipment will not be permitted; therefore, temporary bridges or other structures shall be used wherever frequent stream crossings are necessary. Unless otherwise approved in writing by the Engineer, mechanized equipment shall not be operated in live streams except as may be necessary to construct channel changes and to construct or remove temporary or permanent structures.

(C) Coordination of Erosion Control Operations

Temporary and permanent erosion control measures shall be provided as shown on the plans or as directed by the Engineer. All permanent erosion control work shall be incorporated into the project at the earliest practicable time. Temporary erosion control measures shall be coordinated with permanent erosion control measures and all other

work on the project to assure economical, effective, and continuous erosion control throughout the construction and post construction period and to minimize siltation of rivers, streams, lakes, reservoirs, other water impoundments, ground surfaces, or other property.

Temporary erosion control measures shall include but not be limited to the use of temporary berms, dikes, dams, drainage ditches, silt basins, silt ditches, slope drains, structures, vegetation, mulches, mats, netting, gravel, or any other methods or devices that are necessary. Temporary erosion control measures may include work outside the right of way or construction limits where such work is necessary as a result of construction such as borrow operations, haul roads, plant sites, equipment storage sites, and disposal of waste or debris. The Design-Build Team shall be liable for all damages to public or private property caused by silting or slides originating in waste areas furnished by the Design-Build Team.

Materials for temporary erosion control measures shall have been approved by the Engineer before being used or shall be as directed by the Engineer.

The Design-Build Team shall acceptably maintain erosion control measures installed.

(D) Water and Air Pollution

Exercise every reasonable precaution throughout the life of the project to prevent pollution of ground waters and surface waters, such as rivers, streams, and water impoundments. Do not discharge onto the ground or surface waters any pollutants such as chemicals, raw sewage, fuels, lubricants, coolants, hydraulic fluids, bitumens, and any other petroleum products. Operate and maintain equipment on site in a manner as to prevent the potential or actual pollution of surface or ground waters of the State. Dispose of spent fluids in accordance with applicable State and Federal disposal regulations. Immediately clean up any spilled fluids to the extent practicable and dispose of properly.

Manage, control and dispose of litter on site such that no adverse impacts to water quality occur.

Comply with all State or local air pollution regulations throughout the life of the project.

(E) Dust Control

The Design-Build Team shall control dust throughout the life of the project within the project area and at all other areas affected by the construction of the project, including, but not specifically limited to, unpaved secondary roads, haul roads, access roads, disposal sites, borrow and material sources, and production sites. Dust control shall not be considered effective where the amount of dust creates a potential or actual unsafe condition, public nuisance, or condition endangering the value, utility, or appearance of any property.

The Design-Build Team will not be directly compensated for any dust control measures necessary, as this work will be considered incidental to the work covered by the various contract items.

(F) Application of Specifications

The requirements of this article shall apply to all construction operations. Further references and detailed requirements concerning erosion, siltation, and pollution prevention and control are given in other sections of the Specifications as supplements to the general requirements of this article.

(G) Sanctions

In the event that temporary erosion and pollution control measures become necessary due to the Design-Build Team's negligence, carelessness, or failure to incorporate permanent erosion control measures into the project at the earliest practicable time, such measures shall be performed by the Design-Build Team as directed by the Engineer at no cost to the Turnpike Authority. If the Design-Build Team fails to perform such measures as directed, the Engineer may have the work performed in accordance with Article 105-16.

Failure of the Design-Build Team to fulfill any of the requirements of this article may result in the Engineer ordering the stopping of construction operations in accordance with Article 108-7 until such failure has been corrected. Such suspension of operations will not justify an extension of contract time.

Failure on the part of the Design-Build Team to perform the necessary measures to control erosion, siltation, and pollution will result in the Engineer notifying the Design-Build Team to take such measures. In the event that the Design-Build Team fails to perform such measures within 24 hours after receipt of such notice with adequate forces and equipment, the Engineer may suspend the work as provided above, or may proceed to have such measures performed with other forces and equipment, or both. No payment will be made to the Design-Build Team for the performance of this work and the cost of such work so performed will be deducted from monies due the Design-Build Team on his contract.

107-14 PROTECTION OF PUBLIC LANDS

In the execution of any work within or adjacent to any State or National forest, park, or other public lands, the Design-Build Team shall comply with all regulations of all authorities having jurisdiction over such forest, park, or lands, governing the protection of public lands and the carrying out of work within public lands, and shall observe all sanitary laws and regulations with respect to the performance of work in public lands. He shall keep the areas in an orderly condition, properly dispose of all refuse, and obtain permits for the construction and maintenance of all construction camps, stores, warehouses, residences, latrines, cesspools, septic tanks, and other structures in accordance with the requirements of the appropriate authorities.

The Design-Build Team shall take all reasonable precaution to prevent and suppress forest fires and shall require his employees and subcontractors, both independently and at the request of forest officials, to do all reasonable within their power to prevent and suppress and to assist in preventing and suppressing forest fires and to make every possible effort to notify a forest official at the earliest possible moment of the location and extent of any fire seen by them.

The Design-Build Team shall obtain any construction permits that may be required for his operations, which are not a part of the project, in accordance with the requirements of the regulations of the appropriate authorities.

107-15 RESPONSIBILITY FOR DAMAGE CLAIMS

The Design-Build Team shall indemnify and save harmless the Turnpike Authority Board and the NCDOT Board of Transportation and members and the Department of Transportation and Turnpike Authority and their officers, agents, and employees from all suits, actions, or claims of any character brought for any injury or damages received or sustained, or alleged to have been received or sustained, by any person, persons, or property by reason of any act of the Design-Build Team, subcontractor, its agents or employees, in the performance of the contract. The Design-Build Team's liability to save harmless and indemnify shall include, but not by way of limitation, the following:

(A) damages or claims for the failure of the Design-Build Team to safeguard the work;

(B) damages or claims by reason of the failure of the Design-Build Team to erect adequate barricades and post adequate warnings to the public of such barricades;

(C) any damage or claims caused through the Design-Build Team's use of defective materials or by the performance of defective work;

(D) any claims by reason of the Design-Build Team's infringement of patent, trademark, or copyright;

(E) any amounts paid by the Turnpike Authority by reason of the Design-Build Team's failure to comply with or for violations of laws, ordinances, orders, or decrees;

(F) any damages or claims caused by blasting operations of the Design-Build Team with or without proof of negligence on the part of the Design-Build Team;

(G) damages or claims caused by the failure of the Design-Build Team to protect private or public property pursuant to Article 107-12, including damages to public and private property caused by silting and slides from waste areas furnished by the Design-Build Team, without proof of negligence;

(H) damages caused by the failure of the Design-Build Team to control erosion in accordance with the contract.

In addition to any remedy authorized by law, the Turnpike Authority shall have a right to retain from monies due the Design-Build Team, as the Turnpike Authority considers necessary until final disposition has been made of the following suits or claims:

(1) For all claims against the Turnpike Authority involving claims or damages that are the Design-Build Team's responsibility under Section 107. The Design-Build Team and the Surety shall remain responsible until such suits or claims against the Turnpike Authority have been settled and until the Turnpike Authority and the Department has been indemnified and saved harmless.

(2) In case of claims by the third parties against the Design-Build Team involving tort liability for which the Turnpike Authority or Department might be held liable for as a taking of property, or as a tort before the Industrial Commission. However, monies due the Design-Build Team will not be retained provided the Design-Build Team produces satisfactory evidence to the Turnpike Authority that he is adequately protected from such tort liability by public liability and property damage insurance. In all other cases involving claims or suits by third parties against the Design-Build Team, amounts due the Design-Build Team will not be withheld provided that the consent of the Surety is furnished and the Surety guarantees

payment of any amounts for which the Design-Build Team may be determined to be legally liable.

(3) In cases of damage to property of the Turnpike Authority, such amounts necessary to pay for such damage.

In cases where claims are made or suits filed against employees, agents, or officers of the Turnpike Authority or the Department of Transportation or members of Authority Board or the Board of Transportation, the Turnpike Authority may retain from monies due the Design-Build Team sufficient to indemnify such employee, agent, or officer of the Turnpike Authority or the Department of Transportation or member of the Authority Board or Board of Transportation for any amounts which they may be held liable for but for which the Design-Build Team is responsible under the requirements of Section 107. In the event that there is not sufficient retainage or the final estimate is paid, the Turnpike Authority may collect from the Design-Build Team or its Surety amounts sufficient to indemnify such employee, agent, or officer of the Turnpike Authority or the Department of Transportation or member of the Authority Board or Board of Transportation for such damages incurred.

107-16 LIABILITY INSURANCE

When required by the contract, the Design-Build Team shall carry insurance of the kinds and in the amounts specified therein in addition to any other forms of insurance or bonds required under the terms of the contract, or any other insurance carried by the Design-Build Team.

107-17 OPENING SECTIONS OF PROJECT TO TRAFFIC

If it is determined by the Engineer that the Design-Build Team will not complete the work by the completion date, intermediate completion date, or intermediate completion time, the Engineer may notify the Design-Build Team in writing that upon expiration of contract time or intermediate contract time the project or any portion thereof will be open to traffic. On such sections that are opened, the Design-Build Team shall conduct the remainder of his operations so as to cause the least obstruction to traffic. The Design-Build Team shall not be relieved of his liability or responsibility, shall not receive any additional compensation due to the added cost of the work, nor shall he receive any extension of the completion date, intermediate completion date, or intermediate completion time, by reason of such openings.

107-18 DESIGN-BUILD TEAM'S RESPONSIBILITY FOR WORK

Until final acceptance of the work by the Engineer, as evidenced in writing, the Design-Build Team shall have the charge and care thereof and shall take every precaution against injury or damage to any part thereof by the action of the elements, or from any other cause, whether arising from the execution or from the nonexecution of the work. The Design-Build Team shall rebuild, repair, restore, and make good all injuries or damages to any portion of the work occasioned by any of the above causes before final acceptance and shall bear the expense thereof, except as provided in other sections of the Specifications. The Turnpike Authority will reimburse the Design-Build Team for the repair of the work due to actions of the elements of such exceptional nature as to be contractually classified as Acts of God.

In case of suspension of work from any cause whatever, the Design-Build Team shall be responsible for all materials, and shall properly store them, if necessary, and shall provide

suitable drainage of the roadway and erect necessary temporary structures at no cost to the Turnpike Authority.

107-19 FURNISHING RIGHT OF WAY

The responsibility for coordinating the securing of all necessary rights of way is as outlined in the Request for Proposals.

107-20 PERSONAL LIABILITY OF PUBLIC OFFICIALS

Employees, agents, officers, and members of the Authority Board, NCDOT Board of Transportation, Turnpike Authority or the Department of Transportation shall not be held personally liable for any damages connected with the work, it being specifically understood in all such matters that they act solely as agents and representatives of the Authority Board, NCDOT Board of Transportation, Turnpike Authority or the Department of Transportation.

107-21 WAIVER OF LEGAL RIGHTS BY THE TURNPIKE AUTHORITY

Upon completion of the work, the Turnpike Authority will expeditiously make an inspection and notify the Design-Build Team of acceptance. Such final acceptance and processing of the final estimate, however, shall not preclude or stop the Turnpike Authority from correcting any measurement, estimate, or certificate made before or after completion of the work, nor shall the Turnpike Authority be precluded or esteemed from recovering from the Design-Build Team or his Surety, or both, such overpayment as it may sustain, or by failure on the part of the Design-Build Team to fulfill his obligations under the contract. A waiver on the part of the Turnpike Authority of any breach of any part of the contract shall not be held to be a waiver of any other or subsequent breach.

The Design-Build Team, without prejudice to the terms of the contract, shall be liable to the Turnpike Authority for latent defects, fraud, or such gross mistakes as may amount to fraud, or as regards the Turnpike Authority's rights under any warranty or guaranty.

107-22 SAFETY AND ACCIDENT PROTECTION

The Design-Build Team shall comply with all applicable Federal, State, and local laws, ordinances, and regulations governing safety, health, and sanitation, and shall provide all safeguards, safety devices, and protective equipment, and shall take any other needed actions, on his own responsibility that are reasonably necessary to protect the life and health of employees on the job and the safety of the public, and to protect property in connection with the performance of the work covered by the contract.

All Design-Build Teams' personnel, all subcontractors and their personnel, and any material suppliers and their personnel shall wear a reflective vest or outer garment conforming to the requirements of MUTCD at all times while on the project.

107-23 WAGES AND CONDITIONS OF EMPLOYMENT

The Design-Build Team's attention is directed to the provisions and requirements of any and all public statutes that regulate hours or conditions of employment on public work. Such provisions and requirements that are appropriate, in accordance with the intent of the particular law, act, or statute, will be applicable to all work performed by the Design-Build Team with his own organization and with the assistance of workmen under his immediate superintendence, and

to all work performed by subcontract. It shall be the responsibility of the Design-Build Team to ascertain the appropriate application of such provisions and requirements to the work.

In addition to the general requirements of the various regulations referred to above, certain additional regulations and restrictions may be imposed that are peculiar to the particular work under the contract. In such cases, these regulations and restrictions will be included in the contract for the particular project involved.

For projects that are financed wholly or in part with Federal funds, the minimum wage rates to be paid to all mechanics and laborers employed on the project will be determined by the U.S. Secretary of Labor. A schedule of such wage rates will be inserted in the proposal for such projects. The Design-Build Team shall provide at the job site at no cost to the Turnpike Authority a weatherproof bulletin board covered with glass or rigid transparent plastic and shall display thereon at all times legible copies of such schedule of wage rates and of the wage rate information poster that will be furnished to him. The bulletin board shall be located in a conspicuous place easily accessible to all employees.

In the event that changes should occur in any of the regulations referred to in this article, or in any application thereof to the work under contract, no additional compensation will be allowed the Design-Build Team as a result of such changes.

107-24 LIABILITY TO THIRD PARTIES

It is not intended by any of the provisions of any part of these specifications to make the public or any member thereof a third party beneficiary hereunder, or to authorize anyone who is not a party to a contract entered into pursuant to these specifications to maintain a suit for personal injury or property damage otherwise than as authorized and provided by law.

107-25 RIGHT OF THE DESIGN-BUILD TEAM TO FILE VERIFIED CLAIM

If the Design-Build Team fails to receive such settlement as he claims to be entitled to under the terms and provisions of the contract, the Design-Build Team may submit a written and verified claim for such amounts he deems himself or his subcontractor(s) entitled to under the terms and provisions of the contract provided he has complied with the applicable provisions of the contract including, but not limited to, giving written notice of intent to file a claim, keeping and submission of cost records, and the initial submission of a written claim within the specified time period. The claim shall be submitted to the NCTA Chief Engineer within 60 days from the time the Design-Build Team receives the final estimate as defined by Section 101 and shall be submitted in accordance with G.S. 136-29.

107-26 HAZARDOUS, CONTAMINATED, AND/OR TOXIC MATERIAL

When the Design-Build Team's operations encounter or expose any abnormal condition that may indicate the presence of a hazardous, contaminated, and/or toxic material, such operations shall be discontinued in the vicinity of the abnormal condition and the Engineer shall be notified immediately. Upon notification by the Design-Build Team, the Engineer will investigate the work and, if necessary, suspend the work in accordance with Article 108-7. The presence of barrels; old or abandoned underground storage tanks, and discolored earth, metal, wood, etc.; visible fumes; abnormal odors; excessively hot earth; smoke; or anything else that appears

abnormal may be indicators of hazardous, contaminated, and/or toxic materials and shall be treated with extraordinary caution as they are evidence of abnormal conditions.

The Design-Build Team's operations shall not resume until so directed by the Engineer.

Disposition of the hazardous, contaminated, and/or toxic material will be made in accordance with the requirements and regulations of the Department of Human Resources and the Department of Environment, Health & Natural Resources. Where the Design-Build Team performs work necessary to dispose of hazardous, contaminated, and/or toxic material, payment will be made at the unit prices for pay items included in the contract which are applicable to such work or, where the contract does not include such pay items, payment will be made as provided in Article 104-7 for extra work. Where the contract does not include pay items for the work necessary to dispose of hazardous, contaminated, and/or toxic material, the Engineer may have the work performed by others.

107-27 FINES AND LEVIES AGAINST THE TURNPIKE AUTHORITY OR DEPARTMENT

In the event there are fines or charges levied against the Turnpike Authority or Department, actions taken by the Turnpike Authority or Department, or remediation required by the Turnpike Authority or Department due to the Design-Build Team's negligence, carelessness or failure, due to violations charged to the Design-Build Team, or due to the Design-Build Team's failure to conform to the Specifications, monies will be deducted from monies to be paid to the Design-Build Team on this project.

SECTION 108
PROSECUTION AND PROGRESS

108-1 GENERAL

It is the intent of these Specifications that the Design-Build Team shall commence work on the date of availability shown in the contract or as soon thereafter as practicable, except that when required by permits included in the proposal, that work in jurisdictional waters and wetlands shall not begin until a meeting is held between the Department, Regulatory Agencies, and the Design-Build Team. The Design-Build Team shall not begin work prior to the date of availability without written approval of the Engineer. If such approval is given, the Turnpike Authority will assume no responsibility for any delays caused prior to the date of availability by any reason whatsoever, and such delays, if any, will not constitute a valid reason for extending the completion date. The Design-Build Team shall not commence work prior to execution of the contract by both the Turnpike Authority and the Design-Build Team.

The Design-Build Team shall pursue the work diligently with workmen in sufficient numbers, abilities, and supervision, and with equipment, materials, and methods of construction as may be required to complete the work described in the contract or as may be amended, by the completion date.

108-2 COST-LOADED CRITICAL PATH METHOD PROJECT SCHEDULE

A. General Requirements

The Design-Build Team shall create a Cost-Loaded Critical Path Method Project Schedule (CPM). The Design-Build Team shall include in the CPM the work of subcontractors, vendors, suppliers, utilities, railroads, permitting agencies, NCDOT, NCTA, and all other parties associated with the Project. Failure by the Design-Build Team to include any element of its Work or the work of others required for completion of the Project will not excuse the Design-Build Team from completing the Project by the Contract Completion Date(s). The Design-Build Team shall assign a dollar value to each activity in the CPM. The Design-Build Team shall use the CPM to prepare its partial payment requests in accordance with Article 109-4 of the Standard Special Provision, Division One found elsewhere in this RFP. The Design-Build Team shall provide adequate time in the schedule for all parties involved with the Project to complete their Work, including inspections, procurement activities, and testing. The Design-Build Team's plan, as presented in the CPM, shall adhere to all Contract requirements.

The Engineer's acceptance of any schedule does not relieve the Design-Build Team of responsibility for the accuracy or feasibility of the schedule, does not modify the contract, will not be construed as an endorsement or validation of the Design-Build Team's plan, and does not guarantee that the Project can be performed or completed as scheduled. The Engineer's acceptance of the Design-Build Team's schedules in no way attests to the validity of the assumptions, logic constraints, dependency, relationships, resource allocations, resource availability, manpower and equipment, or any other aspect of the means and methods of performing the Work. The Design-Build Team is and shall remain solely responsible for the scheduling, planning, and execution of the Work in order to meet the Project Milestones, the Intermediate Contract Times, and the Contract Completion Date(s).

NCTA will only reimburse costs for delays as identified in Article 104-4 of the Standard Special Provision, Division One. Except for cost identified in Article 104-4, NCTA will not be responsible for additional or unabsorbed overhead costs resulting from delays, regardless of whether or not the delays were excusable.

Although the Design-Build Team may plan to achieve Substantial Completion or Final Completion early, in no event will the Design-Build Team be entitled to any additional compensation related to the inability to complete work in advance of the applicable contract deadline.

Materials – The Design-Build Team shall produce every schedule referenced in this Provision and/or submitted to the Engineer on a computer using software and files that are compatible with Primavera Version 6.0 (P6).

Definitions – The following definitions apply solely to the terms used in this provision. The following definitions do not modify in any way the definitions provided elsewhere in the Contract Documents.

> **Activity** – A discrete, identifiable task or event that takes time, has definable start and stop dates, furthers the Work's progress, and can be used to plan, schedule, and monitor a project.

Activity Calendar – A set of days assigned to an activity on which work associated with the activity may be scheduled.

Activity Code – Additional information assigned to an activity for purposes of grouping or filtering related activities. Common codes include phase, area, responsibility, subcontractor, type of work, and sub phase.

Activity ID – A unique, alphanumeric, identification code assigned to an activity.

Actual Dates – Actual Starts and Actual Finishes of activities in the schedule.

Actual Finish – The date when the work represented by a specific activity in the schedule was actually finished.

Actual Start – The date when the work represented by a specific activity in the schedule was actually started.

Activity Network Diagram – A graphic representation of a CPM schedule that shows the relationships among activities.

Bar Chart – A graphic representation of a schedule without relationships. A timescale appears along the horizontal axis.

Baseline Schedule – The first accepted CPM schedule showing the accepted plan to complete the entire Project.

CPM of Record – The most recent CPM schedule accepted by the Engineer.

Calendar Day – A day shown on the calendar beginning and ending at midnight.

Constraint – A restriction imposed in a schedule, which fixes a value that would otherwise be calculated within the schedule. Examples of values that can be fixed by a constraint include float, start date, end date, and completion date.

Contract Time – The number of calendar days inclusive between the Notice to Proceed and the Contract Completion Date.

Contract Value – The Contract Lump Sum Price and any additional dollar value added through Supplemental Agreement(s).

Controlling Activity – The first incomplete activity on the Critical Path. This term is considered synonymous with "Controlling Opoeration."

Critical Delay – A delay to an activity on the critical path that extends the Scheduled Completion Date.

Critical Path – The longest path of activities that determines the scheduled completion date of the Project. Activities on the critical path are critical activities.

Data Date – The earliest possible date identified in a schedule from which remaining activities can proceed.

Early Finish – The earliest date an activity can finish based on its duration and its predecessors.

Early Start – The earliest date an activity can start based on its predecessors.

Final Schedule – The last monthly update CPM schedule containing actual start and finish dates for every activity.

Free Float – The amount of time an activity can be delayed and not delay a successor.

Lag – An offset of time from the predecessor to the successor. Lag is a numerical value that is not assigned a description or activity number.

Late Finish – The latest date an activity can finish based on its successors without causing a delay to the Scheduled Completion Date of the Project.

Late Start – The latest date an activity can start based on its successors and duration without causing a delay to the Scheduled Completion Date of the Project.

Logic – Plural or singular reference to the predecessor and successor relationships between activities in the schedule.

Milestone – An activity with no duration that is typically used to represent the beginning or end of the project or an interim phase. Includes, but is not limited to, Intermediate Completion Dates and the Contract Completion Date.

Monthly Update Schedule – A CPM schedule produced by incorporating the Project's actual progress into the CPM of Record.

Open End – The condition that exists when an activity has either no predecessor or no successor, or when an activity's only predecessor relationship is a finish-to-finish or only successor relationship is a start-to-start.

Original Duration – The original estimate of time, expressed in workdays, required to perform an activity.

Predecessor – An activity that is defined by schedule logic to precede another activity.

Preferential Logic – A predecessor or successor relationship that is not based on the minimum requirements for construction. For example, working from North to South versus working from South to North when contract has no restriction either way.

Punch Work – Minor corrective work typically performed at the end of construction that is necessary to bring the Project into full compliance with the requirements of the Contract.

Relationship – Interdependence between two activities. Relationships link an activity to predecessors and successors.

Remaining Duration – The estimated time, expressed in workdays, required to complete an activity.

Revised Schedule – A Schedule of Record with Schedule Revisions.

Scheduled Completion Date – The completion date forecast by the CPM schedule. The schedule may also forecast Intermediate Completion Dates for Milestones, Phases, or other portions of the Project.

Schedule Revision(s) – A change in the method of calculation, relationships, sequence, or original duration of activities in the schedule; or a change in the remaining duration of a work activity that is not caused by the actual progress of the activity.

Successor – An activity that is defined by schedule logic to succeed another activity.

Total Float – The amount of time an activity can be delayed and not delay the Scheduled Completion Date.

B. Design-Build Team's Scheduling Representative

The Design-Build Team shall propose to NCTA a person to serve as the Schedule Representative responsible for developing, updating, and revising the Design-Build Team's CPM. The Design-Build Team shall propose a Schedule Representative with at least 500 hours of scheduling

experience, and at least one year of project management experience including responsibility for the project's budget. The Schedule Representative may also serve as the project manager, so long as all the requirements of this Provision can still be met. The proposed Schedule Representative's qualifications shall be submitted with the Technical Proposals for NCTA evaluation. The Engineer may reject a Scheduling Representative that does not meet the minimum requirements of this Provision. In such case, the Design-Team must designate another individual with the minimum requirements for a Scheduling Representative prior to the acceptance of the Initial CPM.

The Design-Build Team shall authorize the Schedule Representative to certify schedules, answer schedule-related questions, and propose revisions to the schedule as necessary to present a current and reliable plan of construction. The Schedule Representative shall be authorized to speak on behalf of the Design-Build Team in matters related to scheduling and budgeting of the Work. The Schedule Representative shall attend all scheduling and progress meetings, including, but not limited to, the Design-Build Team's schedule meetings with subcontractors, vendors, utility companies, or other government agencies. The Design-Build Team shall employ the Schedule Representative full time. The Design-Build Team shall assign the Schedule Representative exclusively to this Project, and the Scheduling Representative shall be physically present on site to execute the duties outlined in this Provision.

If the accepted Schedule Representative is no longer assigned to the Project, the Design-Build Team shall submit a new Schedule Representative for the Engineer's review within 14 days of receiving notice of the Schedule Representative's departure.

C. Interim Schedule

In addition to Section 800 of the Standard Specifications, the Design-Build Team may submit electronically to NCTA a cost-loaded Interim Critical Path Method Project Schedule (Interim Schedule). The Interim Schedule shall be hand delivered on CD to the NCTA within 7 days of Notice to Proceed. The NCTA will use the Interim Schedule to monitor the progress of the Project and process the Design-Build Team's partial payment requests for up to 90 days from the Notice to Proceed. The Interim Schedule is optional.

The Interim Schedule shall meet the following requirements:

1) The Interim Schedule will start with an activity identified as "Notice to Proceed." The Design-Build Team shall constrain "Notice to Proceed" to start on the expected date of the Notice to Proceed.
2) The last activity in the Interim Schedule will be identified as "Project Completion." The Design-Build Team shall plan the other activities in the schedule so that the late finish date of "Project Completion" is calculated to occur on the Contract Completion Date.
3) The Design-Build Team shall identify all major components of Work in the Interim Schedule as activities. For the Interim Schedule, the Design-Build Team may present large components of the Work, such as "construction of the Project," as a single activity in the schedule, so long as the Interim schedule meets the other requirements of this Provision.

   The Design-Build Team shall identify the following for each activity in the Interim Schedule.

   a) A unique alphanumeric activity ID
   b) A description of the work associated with each activity ID

c) A duration
   i) The Design-Build Team shall limit activities expected to start in the first 90 days to a maximum of 20 workdays duration. The Design-Build Team shall subdivide activities expected to take longer than 20 days so as to provide more detail and to meet this requirement. Any duration provided by NCTA, utilities, or other government agencies will be exempt from this requirement.
   ii) The Design-Build Team may assign any realistic durations for activities expected to start more than 90-days after Notice to Proceed.
d) Predecessors
e) Successors
f) Value of the Work
   i) The Design-Build Team shall assign an accurate dollar value to each activity expected to start within 90 days of Notice to Proceed based on estimated costs plus associated profit and overhead. The profit and overhead assigned by the Design-Build Team to the individual activities starting in the first 90 days shall be equal to or less than the mark-up applied to the Work when establishing the Contract Lump Sum Price.
   ii) The Design-Build Team shall limit the value of an activity to $500,000 for activities expected to start in the first 90 days. The Design-Build team shall subdivide activities starting in the first 90 days and with anticipated values over $500,000 into 2 or more activities to meet this requirement.
   iii) The Design-Build Team shall assign a dollar value to each activity in the Interim Schedule.
   iv) Activities may be assigned a value of zero dollars, as appropriate.
   v) The total value of all activities in the Interim Schedule shall be equal to the Contract Lump Sum Price.
   vi) Any activities that are incidental will have a value of zero dollars.

4) The Design-Build Team shall assign each activity in the Interim Schedule at least one predecessor and one successor, except the first activity and the last activity in the schedule.

5) The Design-Build Team shall use scheduling software to calculate the following data for each activity in the schedule:
   a) Early Start
   b) Early Finish
   c) Late Start
   d) Late Finish
   e) Total Float

6) The Design-Build Team is not required to submit a written Narrative with the Interim Schedule. However, NCTA will accept and review written narratives as part of its technical assessment of the Design-Build Team's plan of construction. The Design-Build Team's written narrative should explain the planned sequence of work, the critical path, proposed phasing of the Project, and any other scheduling assumptions made by the Design-Build Team.

The Engineer may choose to reject the Interim Schedule if it does not conform to the requirements of this Provision. If the Engineer rejects the Interim Schedule, the Project will be administered as if no Interim Schedule had been submitted.

D. Initial Cost-Loaded Critical Path Method Schedule (ICPM)

Within 30 days of Notice to Proceed, the Design-Build Team shall submit electronically to the Engineer an initial Cost-Loaded Critical Path Method Project Schedule (ICPM) meeting the requirements of this Provision and using industry-accepted CPM scheduling practices as identified in the AGC's Construction Planning and Scheduling book, Second Edition. Within 21 days of the receipt of the Design Build Team's Initial Schedule, the Engineer will complete the review of the ICPM. If the Engineer decides it is warranted, the Engineer will convene a joint review conference at which the Engineer and the Design-Build Team will make any necessary corrections or adjustments to the ICPM. If a revision is necessary either from the Engineer's Review or the joint review conference, the Design-Build Team shall submit a revised ICPM electronically within 7 days of such joint review conference and the Engineer will review the revised ICPM within 7 days of resubmittal. The Design Build Team and the Engineer will repeat this process until an acceptable ICPM is established.

Once the ICPM has been accepted, it becomes the baseline schedule for the Project, and the first CPM of Record for the Project. If an Interim Schedule was submitted and accepted by the Engineer, the accepted ICPM replaces the Interim Schedule for all purposes, including payment.

The Design-Build Team shall submit an ICPM that meets the following requirements.

1) The first activity in the schedule is "Notice to Proceed." The Design-Build Team shall constrain this activity to start on the date of the Notice to Proceed.
2) Except as otherwise indicated in this Provision or agreed in writing by the Engineer, the Design-Build Team shall not use constraints.
3) The Last Activity in the Schedule shall be identified as "Project Completion." The Design-Build Team shall plan the other activities in the schedule so that the expected finish of "Project Completion" is calculated to occur on the Contact Completion Date.
4) The Design-Build Team shall plan its Work to meet all time-related requirements of the Contract. This includes but is not limited to: submittal review times, Milestones, Intermediate Contract Times, phasing requirements, and the date of Substantial Completion. The Design-Build Team shall include activities, within their CPM schedule, which represent reasonable durations for construction impacts or operations created by the ITS and Toll Integration Contractors performing their operations concurrently with the Design-Build Team's Work.
5) The Design-Build Team shall identify all the components of the Work and the work of others on the Project as activities in the ICPM. If the Engineer cannot identify an item of the Work as an activity or as part of an activity in the schedule, then that item of the Work will be considered incidental.

   The Design-Build Team shall designate the following for each activity in the ICPM.

   a) A unique alpha numeric activity ID
   b) A description of the work associated with each activity ID
   c) A duration

i) The Design-Build Team shall limit construction activities to a maximum of 20 workdays duration. The Design-Build Team shall subdivide activities expected to take longer than 20 days so as to provide more detail and to meet this requirement. Any duration provided by NCTA, utilities, or other government agencies shall be exempt from this requirement. Waiting times for plant growth cure times, and other activities assigned a zero dollar value and no assignment of responsibility are also exempt from this requirement.

ii) The Design-Build Team shall limit design activities to the required design submittal intervals or a maximum of 90 days, whichever is shorter. The Design-Build Team shall subdivide activities expected to take longer so as to provide more detail.

d) Predecessors

e) Successors

f) Activity Calendar – The Activity Calendar shall clearly identify the days when work could be performed on the activity and the days when work cannot be performed on the activity.

g) Responsibility for the Work

i) The Design-Build Team shall identify the entity responsible to perform each activity in the schedule. Examples might include a particular subcontractor, NCTA, the Design-Build Team, a design consultant, a utility company, etc.

ii) If more than one entity is performing a particular activity, then the activity code shall identify both entities.

iii) When the ICPM is submitted, the Design Build team shall provide a list to the Engineer of each activity code that assigns responsibility to entities that are not under the control of the Design-Build Team.

h) Area of the Project

i) Phase of the Project

j) Categories and Groupings

i) The Design-Build Team shall assign different categories for items in separate Divisions within the NCDOT Standard Specifications for Roads and Structures and at least one type of work shall be classified as punch work.

ii) The Design-Build Team shall choose a method of identifying the type of work that shall clearly communicate to the Engineer the nature of the work being performed.

k) Value of the Work

i) The Design-Build Team shall assign an accurate dollar value to each activity based on a reasonable assignment of the value of that work when compared to the overall work being performed on the Project.

ii) The Design-Build Team shall not assign a dollar value to an activity less than the estimated cost to perform that work.

iii) The Design-Build Team shall not assign a dollar value to the work being performed by NCTA or other third parties.

iv) Activities scheduled to occur early in the Project shall be assigned the same or lesser value than similar activities scheduled to occur later in the Project, unless otherwise approved.

v) The Design-Build Team shall limit the value of an activity to $500,000. The Design-Build team shall subdivide activities with anticipated values over $500,000 into 2 or

more activities to meet this requirement. Mobilization and materials procurement activities are exempt from this $500,000 requirement.

vi) The Design-Build Team shall assign activities in the schedule representing tasks incidental to the performance of the Work a value of zero dollars.

vii) Activities may be assigned a value of zero dollars when appropriate. Examples include the work of others, or tasks performed by subcontractors for which the contractor has no cost.

viii) The total value of all activities in the ICPM shall be equal to the Contract Value.

ix) Any work performed that is not identified in the schedule will have a value of zero dollars.

x) Any activities that are incidental will have a value of zero dollars.

xi) The Design-Build Team shall be limited to five percent of the total amount bid for the entire Project for "Mobilization" as detailed in Section 800 of the Project Special Provisions.

xii) The Design-Build Team shall assign at least one-half of one percent of the total amount bid for the entire Project to the activity or activities representing punch work.

6) The Design-Build Team shall assign each activity in the ICPM at least one predecessor and one successor, except the first activity, "Notice to Proceed," and the last activity, "Project Completion."

7) The Design-Build Team shall not use start-to-finish relationships to connect predecessor and successor activities.

8) The Design-Build-Team shall limit the use of start-to-start and finish-to-finish relationships to connect predecessor and successor activities. The Schedule Representative shall explain to the Engineer why a start-to-start or finish-to-finish relationship was used upon the Engineer's request.

9) The Design-Build Team shall produce a schedule that does not contain open-ended activities, except for the first and last activity in the schedule.

10) The Design Team shall not use negative lags in the schedule. The Design-Build Team shall limit the use of lags in the schedule and shall not use a lag greater than 5 days. The Schedule Representative shall explain to the Engineer why a lag was used.

11) The Design-Build Team shall use the scheduling software to calculate the following data for each activity in the schedule:

a) Early Start
b) Early Finish
c) Late Start
d) Late Finish
e) Total Float
f) Free Float

12) The Design-Build Team shall be required to submit a written narrative with the ICPM. The Design-Build Team shall explain in its written narrative the planned sequence of the Work, the critical path, proposed phasing for the Project, the activity calendars, maintenance of traffic, milestone dates, labor and equipment resources, and the estimated payouts by month

and by phase. In addition, the Design-Build Team shall explain in its written narrative how it has provided for procurement of materials, weather, permitting requirements, environmental requirements, coordination with other contractors, coordination with local municipalities, coordination with ITS and Toll Integration Contractors, coordination with NCTA's right of way Agent, work to be performed in whole or in part by NCTA or other government agencies, work to be performed by the utility companies, and any other scheduling assumptions made by the Design-Build Team.

The Engineer will review the ICPM submitted by the Design-Build Team for compliance with the requirements of the Contract. The Engineer may reject the ICPM if it does not adhere to the requirements of the Contract. The Engineer may reject the ICPM if it makes unreasonable demands on the NCTA or third parties on the Project without their written acknowledgement or agreement to such demands or requirements. Examples of unreasonable demands might include the simultaneous review of numerous submittals, short durations for utilities to perform work, shutting down adjacent roadways, or limiting access to private land owners. The Engineer may reject a schedule that over-utilizes start-to-start and finish-to-finish relationships to connect predecessor and successor activities if, in the opinion of the Engineer, the use of these logic relationships obscures the relationships between activities. The Engineer may reject a schedule that over-utilizes lags, if in the opinion of the Engineer, lags are being used to replace necessary activities or obscuring how one activity relates to the next.

The Engineer will also review the values assigned to the activities in the ICPM for balance. The Engineer may reject the ICPM if the dollar value assigned to any specific activity exceeds the Engineer's estimate by more than 40% or $100,000. The Engineer may reject the ICPM if, in the opinion of the Engineer, the values assigned to activities expected to be completed early in the Project exceed the value assigned to the same or similar activities expected to finish late in the Project, without explanation.

The Design-Build Team is responsible for the timely preparation of an ICPM that fully complies with the requirements of this Provision and the Contract. The Engineer may take action under Articles 108-7 and 108-9 of the Standard Special Provision, Division One if the Design-Build Team has not prepared an acceptable ICPM within 180 days from the Notice to Proceed.

E. Schedule Updates

As the basis of its partial payment request and as a requirement of this Provision, the Design-Build Team shall submit electronically to the Engineer a regular update to the CPM of Record using accepted scheduling practices. The Engineer will determine the frequency and date of the Schedule Updates – not to exceed two updates per month and to occur at least once within any 35 day period. The Design-Build Team shall continue to provide the Engineer schedule updates until the final schedule is approved with 100% completion of all activities and all the Work on the Project. The Design-Build Team shall submit a Schedule Update within 7 days of its data date. Upon the Engineer's acceptance, the Schedule Update will become the new CPM of Record, replacing the previous CPM of Record, and will be considered used from its data date until the data date of the next schedule accepted by the Engineer.

The Design-Build Team shall incorporate the following information into the previous CPM of record and submit this as its schedule update:

1) An updated data date
2) The actual start of any activity that started prior to the data date of the Schedule Update
3) The actual finish of any activity that finished prior to the data date of the Schedule Update
4) The new remaining duration of any activity that began, but did not finish prior to the data date of the schedule update.
5) The percent complete for every activity in the schedule. The Design-Build Team shall use both activity percent complete and resource percent complete for activities representing the purchase of materials, and shall identify the resource percent complete of activities representing the purchase of materials for undelivered; delivered or fabricated; or installed material as 0%, 95% or 100% complete, respectively.
6) The Design-Build Team shall use the scheduling software to calculate the following data for each of the remaining activities in the Schedule Update:
   a) Early Start
   b) Early Finish
   c) Late Start
   d) Late Finish
   e) Total Float
   f) Free Float

The Design-Build Team shall provide a schedule update narrative as part of the Schedule Update, in addition to any of the other requirements identified in Article 109-4 of the Standard Special Provision, Division One for partial payment requests. The Design-Build Team shall include in the schedule update narrative a description of the Work performed during the update period, the status of any outstanding permits, the current critical path, any delays or disruptions experienced during the update period, any change in planned manpower or equipment, and any foreseeable delays or disruptions. A discussion of delays in the Schedule Update's narrative shall not constitute a written request for additional time or notice of intent to file a claim as required by the Contract.

The Design-Build Team shall not incorporate any revisions into a Schedule Update unless the revisions are minor and have been previously accepted by the Engineer.

The Engineer may reject a Schedule Update that incorporates revisions that were not previously accepted by the Engineer, may reject a schedule update that includes actual dates on or after the data date, and may reject a Schedule Update that records incomplete or incorrect information on the progress of the Work.

F. Revisions to the CPM of Record

The Design-Build Team may revise the CPM of Record. A revision to the CPM of record is defined as one or more of the following:

1) A change in the original duration of an activity
2) An increase in the remaining duration of an activity
3) A change in the logic of the schedule
4) A change to any actual date previously recorded and provided to the Engineer
5) The deletion or addition of an activity

6) A change to, addition of, or deletion of a constraint
7) A change to, addition of, or deletion of an activity code
8) A change to an activity description
9) A change to the dollar value assigned to an activity
10) Any other change other than updating progress or recording actual dates.

A minor revision is defined as a revision that does not affect the critical path of the Work on the Project, does not affect work activities that may soon become critical, does not significantly affect third parties, does not significantly affect NCTA, and does not increase or lower the dollar values assigned to the activities in the schedule. For minor revisions, the Schedule Representative shall contact the Engineer and explain the revision. If the Engineer determines that the revision is minor, the Engineer can verbally accept the revision. The Design-Build Team shall incorporate revisions verbally accepted by the Engineer into the next Schedule Update. The Engineer's determination as to whether a revision is minor or major shall be final.

All revisions that are not minor revisions are major revisions. For major revisions, the Design-Build team shall submit to the Engineer a revised CPM that meets all the requirements of the ICPM and is updated to reflect current progress. The Design-Build Team shall submit any revised CPM within 7 days of its data date unless otherwise agreed by the Engineer. The Design-Build Team shall include a narrative with the revised CPM describing each revision and the reason for each revision. The Design-Build Team shall also include in the narrative any foreseeable problems that may need to be overcome when implementing the revision. A discussion of delays and potential delays in the revised CPM's narrative shall not constitute a written request for additional time or satisfy any requirement for written notice to file a claim as required by the Contract.

If the Design-Build Team is re-allocating the dollar values assigned to activities, it shall include for the Engineer's review a list of the activities affected by the revision, a list of any new activities added or deleted, and the difference in dollar value assigned to each activity. For changed Work where the dollar value is disputed, the Design-Build Team shall assign dollar values to its work activities as directed by the Engineer, but shall include the designation "D-C" at the beginning of the activity's description for each activity affected by the change. For changes settled through a Supplemental Agreement, the Design-Build Team shall assign the agreed dollar amount among the new or existing activities, and shall include the designation SA# (where # represents the number of the Supplemental Agreement) at the beginning of the activity's description for each activity affected by the change.

Within 7 days or submittal, the Engineer shall accept or reject proposed revision(s). Upon the Engineer's acceptance, the revised CPM will become the CPM of Record, and will be used from its data date until the data date of the next schedule accepted by the Engineer.

NCTA will not pay additional costs for revisions to the CPM regardless of what condition or change prompted the revision(s). The cost to create, revise, and update the CPM is an administrative requirement included as part of the Contract Lump Sum Price. The Design-Build Team shall allocate sufficient resources to timely administer the schedule as required.

The Engineer will accept revisions that appear to accurately reflect the Design-Build Team's current plan for completing the Work on the Project. The Engineer may accept a revised CPM that indicates the Project is currently expected to finish earlier or later than required by the

Contract. However, the Engineer's acceptance of the Design-Build Teams' schedules does not relieve the Design-Build Team from its obligations to perform under the terms of the contract including completion of the Work within the contract time; or as granting, rejecting, or in any way acting on the Design-Build Team's requests for adjustment to the date for completion of the Work.

The Engineer may reject any revision that does not, in the opinion of the Engineer, accurately reflect the Design-Build Team's current plan of construction; the Engineer may reject any revision that requires additional or revised actions on the part of third parties or NCTA; the Engineer may reject a revision that changes the dollar value assigned to an activity, unless the Design-Build Team has correctly allocated this amount into new activities for additional detail; the Engineer may reject any revision that materially alters the projected payout of the Project; and the Engineer may reject any revised CPM submitted more than 7 days after its data date unless the Engineer had previously agreed to waive this requirement.

G. Use of the CPM of Record to Assess Project Delays

If the Design-Build Team submits a written request for an extension to the contract time in accordance with Article 108-10 of the Project Special Provisions, the Engineer will rely upon the CPM of Record in effect at the time the delay is recognized or occurs, whichever is sooner, to assess the effects of changes and revisions or other potential causes of delay to the Scheduled Completion Date.

For purposes of calculating and withholding anticipated liquidated damages as identified in Articles 108-8 and 109-4, the Engineer will rely on the Scheduled Completion Date identified in the CPM of Record.

108-3 PRECONSTRUCTION AND PREDESIGN CONFERENCES

The selected Design-Build Team shall meet with the Engineer for a pre-design conference concerning the design phase of the work. This conference shall be held prior to the commencement of work, as it is determined according to Article 108-1, and will be scheduled by the Engineer. At the predesign conference, the Design-Build Team shall furnish authorized signature forms and a list of any proposed subcontractors associated with the design of the project.

A preconstruction conference shall be held at least 10 working days before construction activity begins. This second conference, concerning the construction phase, shall also be scheduled by the Engineer. The Design-Build Team shall give the Engineer a minimum of 45 days notice before he plans to begin construction activities. This will allow the Engineer time for any environmental agency representatives involved in the permitting process, as well as any other pertinent entities, to be scheduled to attend the preconstruction conference. If the Design-Build Team is responsible for utilities in accordance with Article 105-8 and the Request for Proposals, he shall be responsible for coordinating with the Engineer in scheduling their attendance and for notifying them. The Design-Build Team shall also be responsible for coordinating with the Engineer in scheduling the attendance of subcontractors and others deemed appropriate, and for notifying them.

At the preconstruction conference, a list of any proposed subcontractors and major material suppliers associated with the construction of the project will be submitted.

If the contract has a DBE requirement, the Design-Build Team shall submit copies of completed and signed DBE subcontracts information, purchase orders, and/or invoices to the Turnpike Authority.

The Design-Build Team shall submit a traffic control plan in accordance with Article 1101-5 and the Request for Proposals. The Design-Build Team shall designate an employee who is competent and experienced in traffic control to implement and monitor the traffic control plan. The qualifications of the designated employee must be satisfactory to the Engineer.

The Design-Build Team shall submit a safety plan and designate an employee as Safety Supervisor.

Both plans shall be submitted at the preconstruction conference and must be satisfactory to the Engineer. Should the design plan include activities that would place personnel on the work site, traffic control and safety plans for those activities shall be submitted at the predesign conference.

During the preconstruction conference, the Engineer will designate a Turnpike Authority employee or employees who will be responsible to see that the traffic control plans and any alterations thereto are implemented and monitored to the end that traffic is carried through the work in an effective manner. If approved by the Engineer, the Design-Build Team may designate one employee to be responsible for both the traffic control and safety plans. The Design-Build Team shall not designate its superintendent as the responsible person for either the traffic control plan or the safety plan, unless approved by the Engineer.

If the project requires that Design-Build Team or State personnel work from falsework, within shoring, or in any other hazardous area the Design-Build Team shall submit, as part of the Design-Build Team's safety plan, specific measures it will use to ensure worker safety.

The Design-Build Team shall also submit a program for erosion control and pollution prevention on all projects involving clearing and grubbing, earthwork, structural work, or other construction, when such work is likely to create erosion or pollution problems.

If the Design-Build Team fails to provide the required submissions, the Engineer may order the preconstruction conference suspended until such time as they are furnished. Work shall not begin until the preconstruction conference has been concluded and the safety plan has been approved, unless authorized by the Engineer. The Design-Build Team shall not be entitled to additional compensation or an extension of contract time resulting from any delays due to such a suspension.

The Design-Build Team shall designate a qualified employee as Quality Control Manager. The Quality Control Manager shall be responsible for implementing and monitoring the quality control requirements of the project.

108-4 CONSTRUCTION CONFERENCES

After work on the project has begun, construction conferences shall be held periodically. The construction conferences are to be scheduled at times that are mutually agreeable to both the project superintendent and the Engineer. It shall be the superintendent's responsibility to attend the conferences. The Design-Build Team shall record the proceedings of these conferences and distribute the final minutes of the conferences to all attendees within 10 calendar days of the conference.

108-5 CHARACTER OF WORKMEN, METHODS, AND EQUIPMENT

The Design-Build Team shall at all times employ sufficient labor and equipment for prosecuting the several classes of work to full completion in the manner and time required by these specifications.

The Design-Build Team shall not recruit Department or Turnpike Authority employees for employment. Additionally, Turnpike Authority or Department employees who elect to become employed by a Design-Build Team may not perform any function on a project with which they have been involved during employment with the Department or Turnpike Authority without written consent of the State. Any person employed by the Design-Build Team and assigned to a project who has previously been involved in the project as a Department or Turnpike Authority employee shall be, at the written direction of the Engineer, removed from the project. An exception to these terms may be granted when recommended by the Secretary and approved by the Board of Transportation or Turnpike Authority Board.

Failure of the Design-Build Team to comply may be justification for disqualifying the Design-Build Team from further bidding in accordance with the requirements of Article 102-16 and shall be grounds for termination of this contract.

No person shall be employed by the Design-Build Team or by any subcontractor who has been determined by the Engineer to have engaged in fraudulent activities in connection with any work for the Turnpike Authority or the Department of Transportation.

Any person employed by the Design-Build Team or by any subcontractor who, in the opinion of the Engineer, does not perform his work in a proper and skillful manner or is disrespectful, intemperate, or disorderly or who has been determined by the Engineer to have engaged in fraudulent activities in connection with any work for the Turnpike Authority or the Department of Transportation shall be, at the written request of the Engineer, removed forthwith by the Design-Build Team or subcontractor employing such person, and shall not be employed again in any portion of the work without the approval of the Engineer.

Should the Design-Build Team fail to remove such person(s) as required above, the Engineer may suspend the work in accordance with the requirements of Article 108-7.

All equipment which is proposed to be used on the work is to be of sufficient size and in such mechanical condition as to meet the requirements of the work and to produce a satisfactory quality of work. Equipment used on any portion of the project shall be such that no injury to the roadway, adjacent property, or other highways will result from its use. The Engineer may order in writing the removal and replacement of any unsatisfactory equipment.

When the methods and equipment to be used by the Design-Build Team in accomplishing the construction are not prescribed in the contract, the Design-Build Team is free to use any methods or equipment that he demonstrates to the satisfaction of the Engineer will accomplish the contract work in conformity with the requirements of the contract.

When the contract specifies that the construction be performed by the use of certain methods and equipment, such methods and equipment shall be used unless others are approved by the Engineer. If the Design-Build Team desires to use a method or type of equipment other than those specified in the contract, he may request approval from the Engineer to do so. The request shall be in writing and shall include a full description of the methods and equipment proposed to be used and an explanation of the reasons for desiring to make the change. If approval is given it will be on the condition that the Design-Build Team will be fully responsible for producing

construction work in conformity with contract requirements. If, after trial use of the substituted methods or equipment, the Engineer determines that the work produced does not meet contract requirements, the Design-Build Team shall discontinue the use of the substitute method or equipment and shall complete the remaining construction with the specified methods and equipment. The Design-Build Team shall remove the unsatisfactory work and replace it with work of specified quality, or take such other corrective action as the Engineer may direct. No change will be made in basis of payment for the construction items involved or in the completion date as a result of authorizing a change in methods or equipment under these provisions.

108-6 SUBLETTING OF CONTRACT

The Design-Build Team shall not sublet, sell, transfer, assign, or otherwise dispose of the contract or any portion thereof; or of his right, title, or interest therein; without written consent of the Engineer. In case such consent is given, the sublet work shall be performed by the subcontractor unless otherwise approved in writing by the Engineer. Failure of the Design-Build Team to comply with these Specifications will be just cause for the work to be considered unauthorized in accordance with Article 105-12. A firm that has been disqualified due to its failure to maintain satisfactory progress under the requirements of Article 108-8 will not be approved as a subcontractor until the firm demonstrates the ability to perform the work in a satisfactory manner. When directed by the Engineer, the Design-Build Team shall submit a certified copy of the actual subcontract agreement executed between the Design-Build Team and subcontractor prior to written consent being issued by the Engineer. In case such consent is given, the Design-Build Team will be permitted to sublet a portion thereof, but shall perform with his own organization, work amounting to not less than 30 percent of the total original contract amount, except:

(A) Any items designated in the contract as *specialty items* may be performed by subcontract and the cost of any such special items so performed by subcontract will be deducted from the total amount bid before computing the amount of work required to be performed by the Design-Build Team with his own organization, and

(B) Any other items sublet to Disadvantaged Business Enterprise (DBE), Minority Business (MB) or Women's Business (WB), up to the value of the contract DBE, MB or WB goal, will be deducted from the total amount bid before computing the amount of work required to be performed by the Design-Build Team with his own organization.

In any event, the Design-Build Team shall perform with his own organization work amounting to not less than 25% of the difference between the total amount bid and the value of specialty items that have been sublet.

Extra work performed in accordance with Article 104-7 will not be considered in the computation of work required to be performed by the Design-Build Team.

An assignment by operations of law or assignment for the benefit of creditors, or the bankruptcy of the Design-Build Team, shall not vest any right in this contract in the Trustee in bankruptcy, the Design-Build Team's creditors, or the agent of the creditors.

A subcontractor shall not sublet, sell, transfer, assign, or otherwise dispose of his contract with a Design-Build Team or any portion thereof; or of his right, title, or interest therein; without written consent of the Engineer. When directed by the Engineer, the Design-Build Team shall submit a certified copy of the actual subcontract agreement executed between the subcontractor and the second tier subcontractor. In the event of an assignment by operations of law or the

bankruptcy of the subcontractor, the Design-Build Team shall have the right, power, and authority, in its discretion, without violating the contract or releasing the Surety, to terminate the subcontract. An assignment by operations of law or assignment for the benefit of creditors or the bankruptcy of the subcontractor shall not vest any right in this contract in the Trustee in bankruptcy, nor the subcontractor's creditors or agents of the creditors.

Neither the Design-Build Team, nor any subcontractor, shall enter into any written or oral equipment lease or rental agreement, materials purchase agreement, and/or labor agreement that circumvents the requirements of this article.

If the Design-Build Team or a subcontractor enter into a lease or rental agreement for equipment based upon payment for a unit of work, such agreement will be considered subletting of the contract unless the lease or rental agreement is with a commercial equipment company, manufacturer, and/or commercial leasing agency and such firm has been approved by the Engineer. An equipment lease or rental agreement that is based upon unit prices per unit of time will not be considered subletting of the contract.

The approval of any subcontract will not release the Design-Build Team of his liability under the contract and bonds, nor will the subcontractor or the second tier subcontractor have any claim against the Turnpike Authority by reason of the approval of the subcontract. The NCTA Chief Engineer will review and consider subcontractor claims for additional time or compensation provided such claims are submitted by the Design-Build Team in accordance with Article 107-25 and General Statute 136-29.

Failure of the Design-Build Team to comply with any of the requirements of this article may be justification for disqualifying the Design-Build Team from further bidding in accordance with the requirements of Article 102-16.

108-7 TEMPORARY SUSPENSION OF THE WORK

The Engineer will have the authority to suspend the work wholly or in part by written order for such periods, as he may deem necessary for any of the following reasons:

(A) Conditions considered unfavorable for the suitable prosecution of the work, or

(B) The Design-Build Team's failure to correct conditions unsafe for workmen or the general public, or

(C) The Design-Build Team has not carried out orders given to him by the Engineer, or

(D) The Design-Build Team's failure to perform any provisions of the contract.

No extension of the completion date will be allowed for the above suspensions except as may be provided for in Article 108-10.

108-8 FAILURE TO MAINTAIN SATISFACTORY PROGRESS

The Engineer shall utilize the Cost-Loaded Critical Path Method Project Schedule to evaluate the Design-Build Team’s progress at the time each partial pay request and schedule update is submitted. The Design-Build Team’s progress shall be considered behind if, according to the CPM Schedule of Record, the Scheduled Completion Date exceeds the Contract Completion Date. For purposes of calculating and withholding anticipated liquidated damages as identified in Article 109-4, the Engineer will rely on the Scheduled Completion Date identified in the CPM of Record.

The Design-Build Team's progress will be considered unsatisfactory if the CPM of Record, Scheduled Completion Date falls behind the Contract Completion Date by more than 5% of the Contract Time and anticipated liquidated damages shall be withheld immediately.

When the Design-Build Team's progress is found to be unsatisfactory as described above, the Engineer may make written demand of the Design-Build Team to state in writing the reason for the unsatisfactory progress and produce such supporting data as the Engineer may require or the Design-Build Team may desire to submit. The Engineer will consider the justifications submitted by the Design-Build Team and extensions of the completion date that have or may be allowed in accordance with Article 108-10(B).

When the Design-Build Team cannot satisfactorily justify the unsatisfactory progress, the Engineer may invoke one or more of the following sanctions:

1. Remove the Design-Build Team and individual managing firms of the Design-Build Team and/or prequalified design firms from consideration for future NCTA projects.
2. Notify the Department of Transportation of such action and possibly make recommendation to the Department of Transportation that the Design-Build Team and individual managing firms of the Design-Build Team and/or prequalified design firms be removed from the Department of Transportation's Prequalified Bidders List, Approved Subcontractors List, and/or the Prequalified List of Private Consulting Firms.

When any of the above sanctions have been invoked, they shall remain in effect until rescinded by the Engineer.

108-9 DEFAULT OF CONTRACT

(A) Declaration of Default

The Turnpike Authority shall have the right to declare default of the contract for breach by the Design-Build Team of any material term or condition of the contract. Material breach by the Design-Build Team shall include, but specifically shall not be limited to failure to begin work under the contract within the time specified; failure to provide workmen, equipment, or materials adequate to perform the work in conformity with the contract by the completion date; unsatisfactory performance of the work; refusal or failure to replace defective work; failure to maintain satisfactory work progress; failure to comply with equal employment opportunity contract requirements; insolvency or bankruptcy, or any act of insolvency or bankruptcy; failure to satisfy any final judgment within 10 calendar days after entry thereof; and making an assignment for benefit of creditors.

(B) Sanctions

In the event of a breach of the contract by the Design-Build Team, the Turnpike Authority shall have the right, power, and authority, in its sole discretion, without violating the contract or releasing the surety: to assume full control of the prosecution of the contract in the place and stead of the Design-Build Team in directing Design-Build Team's agents, employees, and subcontractors in the performance of the work and in utilizing all materials, tools, machinery, equipment, and structures located on the project; to perform the work or any part thereof with Turnpike Authority personnel and equipment or to utilize any or all materials and equipment located on the project that are

suitable and acceptable; to relet the work upon such terms and conditions as the Turnpike Authority shall deem appropriate; to employ any other methods that it may determine are required for completion of the contract in an acceptable manner; and to withhold any sums due the Design-Build Team under the contract without penalty or interest until the work is completed and accepted by the Turnpike Authority.

(C) Notice

Before invoking any of the sanctions provided for herein, the Turnpike Authority will give the Design-Build Team at least 7 calendar days written notice with a copy to the Surety, that will set forth the breach of contract involved and the sanctions to be imposed. The Turnpike Authority, in its discretion, may grant the Design-Build Team time in excess of 7 calendar days within which to comply with the contract and the time allowed will be set forth in writing. If the Turnpike Authority determines during such period that the Design-Build Team is not proceeding satisfactorily to compliance, it may impose the sanctions after 24 hours notice to the Design-Build Team. If the Turnpike Authority determines that the Design-Build Team is not in compliance at the end of the time allowed, it may immediately impose any of the sanctions set forth herein and will advise the Design-Build Team, in writing, with a copy to the Surety of the sanctions imposed.

(D) Payment

After declaration of default has been made final, the Design-Build Team will be entitled to receive payment for work satisfactorily completed or portions of work satisfactorily completed, less any sums that may be due the Turnpike Authority from the Design-Build Team but in no event shall payment exceed the contract unit or lump sum price for such work. The Turnpike Authority, at its election, may retain the sum due the Design-Build Team, or any portion thereof, without interest or penalty, until the contract work is completed; or it may make payment to the Design-Build Team upon declaration of default for work satisfactorily completed to the date that notice of default is received by the Design-Build Team. The Design-Build Team may be required by the Engineer, however, to carry to a stage of completion satisfactory to the Engineer any work in progress, the value of which otherwise would be lost by immediate cessation of work. Payment for such work will be made upon the basis hereinafter set out.

In the event that the Design-Build Team's employees, equipment, or materials are used in prosecution of the work, or any part thereof, after default is declared, payment to the Design-Build Team may be by contract unit or lump sum prices for the work performed, or, if the Engineer determines that such prices do not represent the value of the work performed, payment for the type of work or services performed will be made on a force account basis, as set forth in Article 109-3, less any sums that may be due the Turnpike Authority; but in no event shall payment exceed the contract unit or lump sum price for such work or services. Determination of the method of payment shall be in the sole discretion of the Engineer, and he will advise the Design-Build Team, in writing, of his determination with reference to the specific type of work or service to be performed.

If all costs and expenses incurred by the Turnpike Authority arising out of the breach and imposition of sanctions, together with the total cost to the Turnpike Authority of securing the performance of the work set forth in the contract, exceed the sum that would have been payable under the contract, the Design-Build Team and the Surety shall be liable to

the Turnpike Authority for such excess and shall pay such amount to the Turnpike Authority.

(E) Power of Engineer

The Engineer will exercise the powers and discretion vested in him by the contract in carrying out the terms of this article. He will have full power and authority to carry out any orders, directives, or resolutions issued by the Turnpike Authority in connection with a declaration of default. In the event that the Turnpike Authority fails to specify the sanctions to be imposed, the notice to be given, or the method of completing the work, the Engineer, may, in his discretion, impose such sanctions, give such notice, and select such methods of completing the work, as are authorized by this article; and such actions shall have the same effect and validity as if taken pursuant to an express order, directive, or resolution of the Turnpike Authority.

(F) Obligation of Design-Build Team and Surety

No term or terms of this article and no action taken pursuant hereto by the Turnpike Authority or Department, their agents, or employees, will be construed to release or discharge the Design-Build Team or the Surety upon the obligation set forth in the contract bonds, and the Design-Build Team and the Surety shall remain bound thereon unto the Turnpike Authority until the work set forth in the contract has been completed and accepted by the Turnpike Authority and all obligations of the Design-Build Team and the Surety arising under the contract and contract bond have been discharged.

(G) Provision Not Exclusive

The provisions shall be in addition to, and not in place of, any other provisions relating to default, breach of contract, and sanctions to be imposed in connection therewith appearing in the contract.

108-10 CONTRACT TIME; INTERMEDIATE CONTRACT TIME

(A) General

The contract time will be as defined in Section 101. No extensions to the completion date will be authorized except as allowed by this article. No modifications in the date of availability will be made for any reason whatsoever.

Intermediate contract time, as defined in Section 101 will be that as allowed in the contract to complete a part, portion, or phase of the total work covered in the contract. Intermediate completion dates and intermediate completion times set forth in the contract may be extended on the same basis as completion dates and as described in this article.

When the liquidated damages stipulated in the contract are to be on an hourly basis, extensions as described in this article will be considered on an hourly basis.

The Engineer will rely upon the CPM of Record in effect at the time the delay is recognized or occurs, whichever is earlier, to assess the effects of changes and revisions or other potential causes of delay to the Scheduled Completion Date.

The Engineer will use the CPM and the following guidelines to assess delays to the Project:

1) The controlling operation of the Work is the first activity on the CPM of Record.

2) The Engineer will not grant a time extension for delays that result from schedule revisions of any sort, unless the revisions are necessary to mitigate unforeseeable and otherwise excusable delays, the revisions are required to incorporate changes to the Work agreed to by the Engineer, or the revisions are expressly requested by the Engineer to accommodate NCTA.
3) The Design-Build Team creates the CPM and is responsible for the accuracy and reliability of the CPM. The Engineer will not grant a time extension for delays that result from improper planning, incorrect sequences, scheduling errors, scheduling omissions, missing portions of the Work in the schedule, or any other cause related to the Design-Build Team's failure to properly manage and schedule the Work or the work of others. The Engineer will not consider a request for additional time from the Design-Build Team that relies on the assumption that the CPM of Record was inaccurate or erroneous.
4) When there are two or more causes for a critical delay, or in the case that two paths of activities are concurrently critical, the Engineer will only grant a time extension if all the causes for the critical delay are determined to be excusable.
5) The critical path is dynamic. The Engineer will assess the critical path on each day of an alleged delay. Only delays to the critical path will be eligible for consideration of a time extension.
6) The Engineer will use the CPM of Record in effect at the time of the delay to assess Project delays. The Engineer will not use rejected schedules, later approved schedules, or new schedules, including "impacted" or "collapsed schedules" to assess a delay to the Project.
7) Float belongs to the Project and is shared between the Design-Build Team and NCTA on a first-come, first-served basis until it is depleted.

(B) Completion Date, Intermediate Completion Date, and Intermediate Completion Time Extensions

Only delays to activities which affect the completion date or intermediate contract date will be considered for an extension of contract time. No extensions will be granted until a delay occurs which impacts the project's critical path, consumes all available float, and extends the work beyond the contract completion date or intermediate completion date. Any extension to the completion date or intermediate contract date will be based on the number of calendar days the completion date or intermediate completion date is impacted as determined by the Engineer's analysis. No extension of the completion date, intermediate completion date, or intermediate completion time will be allowed for any reason except as provided for below:

(1) If the Design-Build Team's current controlling operation(s) are delayed by circumstances originating from work required under the contract and beyond his control and without his fault or negligence, he may, at any time prior to payment of the final estimate, make a written request to the Engineer for an extension of the completion date, intermediate completion date, or intermediate completion time. This request shall include:

(a) the circumstances resulting in the alleged delay and documentation of said circumstances as may be required by the Engineer,

(b) the controlling operation(s) alleged to have been delayed,

(c) the calendar dates or calendar dates and times on which the controlling operation(s) were delayed and

(d) the number of calendar days or hours by which he is requesting the completion date, intermediate completion date, or intermediate completion time to be extended.

If the Engineer determines that the controlling operation(s) were delayed because of circumstances beyond the control of and without the fault or negligence of the Design-Build Team, and that the Design-Build Team has pursued the work in accordance with Article 108-1, he will extend the completion date, intermediate completion date, or intermediate completion time unless otherwise precluded by other provisions of the contract. No extension of the completion date, intermediate completion date, or intermediate completion time will be allowed for delays caused by restrictions, limitations or provisions contained in the contract.

Consideration will be given for an extension in the completion date, intermediate completion date, or intermediate completion time involving an intermediate contract time of more than 96 hours if the Design-Build Team's current controlling operation(s) is delayed in excess of 15 percent of the total contract time (days), as defined in Section 101, the total intermediate contract time (days), as defined in Section 101, or the total intermediate contract time (hours), as defined in Section 101; due to weather or conditions resulting from weather. No other consideration will be given for extensions in the completion date, intermediate completion date, or intermediate completion time due to delays caused by weather.

Where the intermediate contract time is 96 hours or less, no consideration whatsoever will be given for an extension in the intermediate completion time due to weather or conditions resulting from weather.

(2) If changes in the work from that originally contemplated in the contract are ordered by the Engineer and these changes result in reduction in quantities, elimination of items, additional work and/or extra work, the Engineer will allow an extension in the completion date, intermediate completion date, or intermediate completion time as he may deem warranted by such changes. Pursuit of the work with adequate forces and equipment and efficiency of the Design-Build Team's operations will be considered by the Engineer in determining an extension in the completion date, intermediate completion date, or intermediate completion time. It is, however, the Design-Build Team's responsibility to show just cause for an extension in the completion date, intermediate completion date, or intermediate completion time due to the aforesaid conditions.

The Design-Build Team's plea that insufficient contract time (days), intermediate contract time (days), or intermediate contract time (hours) was specified in the contract will not be considered as a valid reason for an extension in the completion date, intermediate completion date, or intermediate completion time.

When all work on the project is totally complete, with the exception of an item or items on which work is precluded by seasonal limitations set forth in the contract, the Engineer may, provided that the Design-Build Team has diligently pursued the work with adequate forces and equipment, waive the assessment of liquidated damages during the period of time from the date

all work other than that precluded by seasonal limitations was completed until the date of expiration of the seasonal limitations. The Design-Build Team shall make the request to waive the assessment of liquidated damages in writing prior to the beginning date of the requested waiver. The non-assessment of liquidated damages during the aforesaid period shall not operate to waive any other liquidated damages that may be assessable, or any other terms of the contract.

108-11 LIQUIDATED DAMAGES

Time is an essential element of the contract, and that delay in completing the work will result in damages due to public inconvenience, obstruction to traffic, interference with business, and the increasing of engineering, inspection, and administrative costs to the Turnpike Authority. It is therefore agreed that in view of the difficulty of making a precise determination of such damages, a sum of money in the amount stipulated in the contract, will be charged against the Design-Build Team for each calendar day, each hour, or portion thereof that the work, or any portion of the work as described in the contract, remains uncompleted after the expiration of the completion date, intermediate completion date, substantial completion date, or intermediate completion time shown in the contract, not as a penalty but as liquidated damages.

Should the Design-Build Team or, in case of default, the Surety fail to complete the work or any portion of the work by any of the applicable completion dates, intermediate completion dates, substantial completion date, or intermediate completion times shown in the contract, a deduction of the amount stipulated in the contract as liquidated damages will be made for each and every calendar day, for each and every hour, or portion thereof that the work or any portion of the work remains uncompleted after the expiration of any completion date, substantial completion date, intermediate completion date, or intermediate completion time applicable to the uncompleted work. This amount will be deducted from any money due the Design-Build Team or his Surety under the contract, and the Design-Build Team and his Surety will be liable for any liquidated damages in excess of the amount due.

In the event that the contract establishes one or more intermediate completion dates and/or one or more intermediate completion times and/or substantial completion date in addition to the completion date, each of the liquidated damages stipulated will be considered to be cumulative to any other liquidated damages stipulated.

In case of default of the contract and the completion of the work by the Turnpike Authority, the Design-Build Team and his Surety will be liable for the liquidated damages under the contract, but no liquidated damages will be chargeable for any delay in the final completion of the work by the Turnpike Authority due to any action, negligence, omission, or delay of the Turnpike Authority.

In any suit for the collection of or involving the assessment of liquidated damages, the reasonableness of the amount stipulated in the contract will be presumed. The liquidated damages referred to herein are intended to be and are cumulative, and will be in addition to every other remedy now or hereafter enforceable at law, in equity, by statute, or under the contract.

Permitting the Design-Build Team to continue and finish the work or any part thereof after the expiration of the completion date, intermediate completion date, substantial completion date, or intermediate completion time shall in no way operate as a waiver on the part of the Turnpike Authority of any of its rights under this contract.

108-12 EXTENSION OF CONTRACT TIME AND APPORTIONMENT OF LIQUIDATED DAMAGES

In accordance with Articles 108-10 and 108-11, when a contract is not completed by the completion date, intermediate completion date, substantial completion date, or intermediate completion time, the Design-Build Team shall be entitled to an extension of the completion date, substantial completion date, intermediate completion date, or intermediate completion time and apportionment and remittance of liquidated damages to the extent that the failure to complete was due to the conditions set forth in Article 108-10. The Design-Build Team, however, shall be entitled to an extension of the completion date, intermediate completion date, substantial completion date, or intermediate completion time, or an apportionment and remittance of liquidated damages only to the extent and in the proportion that such delays were caused by the conditions set forth in Article 108-10, and it is understood that any extension granted shall not operate to waive any liquidated damages or any claim which the Turnpike Authority has or may have against the Design-Build Team by reason of failure of the Design-Build Team to complete the said contract by the completion date, intermediate completion date, substantial completion date, or intermediate completion time specified therein or as revised by authorized extensions.

108-13 TERMINATION OF CONTRACT

The Authority Board may terminate the contract in accordance with the following:

(A) Consideration will be given to termination of the contract if any of the following circumstances exist:

(1) If it is impossible for the Design-Build Team to obtain critical materials for completion of the contract within a practical time limit, or

(2) If it is impossible for the Design-Build Team to complete the work in accordance with the contract by reason of unanticipated conditions at the site, including slides and unstable subsoil, without a major change in the design of the project and the Design-Build Team will be unduly delayed in completing the project by reason of such unanticipated conditions and changes in design, or

(3) If the Design-Build Team is prevented from proceeding with the contract as a direct result of an Executive Order of the President with respect to the prosecution of war or in the interest of national defense, or(4) If the Design-Build Team is prevented from proceeding with the work required by the contract as a direct result of a restraining order, or other court order, or by reason of a permit requirement, and the Design-Build Team will be unduly delayed in completing the project by reason of such order or requirement, or

(5) If the Design-Build Team is prevented from proceeding with the work due to the unavailability of the site.

(B) The Design-Build Team shall determine when the circumstances in item (A) exist and are beyond his control, and shall notify the Turnpike Authority in writing of his determination and include adequate documentation of these circumstances along with such notification.

(C) The Contract will be terminated under this article if:

(1) Request by Design-Build Team

(a) The Authority Board concurs in the determination by the Design-Build Team of the circumstances or makes an independent determination that such circumstances herein above indicated exist, and

(b) The Authority Board determines that such circumstances are beyond the control of the Design-Build Team, and the Design-Build Team was not at fault in creating the circumstances, and

(c) The Authority Board determines that a termination of the contract is in the best public interest, or

(2) Authority of the Authority Board:

The Authority Board determines that a termination of the contract is in the best public interest.

(D) The Design-Build Team will be notified in writing by the NCTA Chief Engineer of the action of the Authority Board.

(E) After a contract is terminated in accordance with this termination provision, the following provisions shall be applicable:

(1) When the contract is terminated before completion of all items of work in the contract, payment will be made for the actual number of acceptably completed items of work or acceptably completed portions thereof at the contract unit or lump sum prices. When the contract is terminated before completion of all items of work in the contract and items of work are partially completed or not begun, payment will be made in accordance with Article 104-6.(2) Upon request from the Design-Build Team, materials meeting the requirements of the contract that were to have been incorporated into the work or were to remain the property of the Department or the Turnpike Authority but are not used in the work will be paid for in accordance with Article 109-6.

(3) No claim for loss of anticipated profits will be considered and no payment will be made for loss of anticipated profits.

(3) Termination of a contract shall not relieve the Design-Build Team of his responsibilities for any completed portion of the work nor shall it relieve his Surety, of its obligation for and concerning any just claims arising out of the work performed.

108-14 TERMINATION OF DESIGN-BUILD TEAM'S RESPONSIBILITY

After the project has been completed and accepted, as provided for in Article 105-17, the Design-Build Team's responsibility will cease except as provided in Article 107-21 and as set forth in his contract bonds. The Design-Build Team shall remain responsible for any amounts determined to be owed the Turnpike Authority in the processing of the final estimate and such amounts shall be paid by the Design-Build Team upon notification by the Turnpike Authority prior to processing of the final estimate.

SECTION 109
MEASUREMENT AND PAYMENT

109-1 MEASUREMENT OF QUANTITIES

All work completed under the contract will be measured by the Engineer according to United States standard measures unless otherwise stated in the contract.

The method of measurement and computations used in the determination of quantities of material furnished and of work performed under the contract will be those methods generally recognized as conforming to accepted engineering practice.

The terms *gauge* and *thickness*, when used in connection with the measurement of plates, sheets, and steel wire, shall be applied as follows:

Uncoated Steel Sheets and Light Plates	United States Standard Gage
Galvanized Sheets	AASHTO M218 or M167
Aluminum Sheets	AASHTO M196 or M197
Steel Wire	AASHTO M32

The term ton will mean short ton (mass) consisting of 2,000 pounds.

Cement will be measured by the barrel unless otherwise indicated elsewhere in the contract. The term *barrel* will mean 376 pounds of cement.

Trucks used to haul material being paid for by weight will be either weighed empty prior to each loading or weighed empty on a daily basis. When trucks are weighed empty on a daily basis, each truck shall be weighed prior to hauling its first load of the day and shall bear a legible identification mark.

Where aggregates that are to be paid for by weight have been stockpiled after being produced, measurement for purposes of payment will be made after the aggregates have been loaded on trucks for direct delivery to the project.

When a complete structure or structural unit, as may be indicated by the unit, *lump sum* or *each*, is specified as the unit of measurement, the unit will be construed to include all necessary fittings and accessories.

When standard manufactured items are specified, and these items are identified by gage, unit weight, section dimensions, and/or other dimensions, such identification will be considered to be nominal weights or dimensions. Unless more stringently controlled by tolerances in cited specifications, manufacturing tolerances established by the industries involved will be accepted.

109-2 SCOPE OF PAYMENT

The Design-Build Team shall receive and accept payment provided for in the contract as full payment for furnishing all materials and performing all work under the contract in a complete and acceptable manner and for all risk, loss, damage, or expense of whatever character arising out of the nature of the work or the prosecution thereof, subject to the requirements of Article 107-21. Payment to the Design-Build Team will be made only for the work completed, certified, and accepted in accordance with the terms of the contract.

If the *Measurement and Payment* clause in the specifications relating to any unit price or lump sum price in the bid schedule requires that the said unit price or lump sum price cover and

be considered compensation for certain work or material essential to the item, this same work or material will not also be measured or paid for under any other pay item that may appear elsewhere in the contract.

109-3 FORCE ACCOUNT WORK

All force account work shall be performed as directed by the Engineer including the numbers and types of equipment, the numbers and classifications of labor and foremen, and material requirements.

The Engineer may adjust the Contract Lump Sum Amount bid for the entire project for Work which is reduced or eliminated as a direct result of the force account work. Such adjustments will be made in accordance with the provisions herein.

All work to be paid for on a force account basis shall be paid for in the following manner:

(A) **Labor** For all authorized labor and foremen in direct charge of the specific operations, the Design-Build Team will receive the rate of base (actual) wages (or scale) actually being paid by the Design-Build Team for each hour that the labor and foremen are actually engaged in the specific force account work.

In addition to reimbursement for each hour that the labor and foremen are actually engaged in the specific force account work, the Design-Build Team may receive compensation for travel time to and from the project if and only if the labor and foremen needed are outside a 75 mile radius as included in Subarticle 109-3(B). The base location will be established and approved by the Engineer prior to performing the specific force account work. If the approved labor and foremen travel to another project upon completion of the specific force account work, payment for travel time may not exceed the travel time that would have been required to return to the point of origin in accordance with Subarticle 109-3(B). When travel time is approved by the Engineer, it shall be included in the total hours approved and worked for that specific week. The Engineer will approve the mode of travel.

Prior to beginning the specific force account work, the Design-Build Team will submit in writing for the Engineer's approval a list of all wage rates applicable to the work. Approval will not be granted where these wage rates are not actually representative of wages being paid elsewhere on the project for comparable classes of labor performing similar work.

Payment for overtime will be allowed when approved by the Engineer prior to performing the specific force account work. Overtime for labor and foremen will be paid based on the company's policy for overtime payment. Verification of such payment will be tracked by submission of weekly payrolls as required on federal projects and as requested on all other projects. Failure to submit payrolls as required or requested shall act as a bar to the Design-Build Team for payment of overtime for labor and foremen. If the labor or foremen is employed partly on specific force account work and partly on other work, the amount of overtime to be reimbursed will be prorated based upon the number of hours worked on the specific force account work during the payroll period.

An additive amount equal to the Design-Build Team's actual labor burden rate, up to a maximum of 60 percent, will be paid to the Design-Build Team for all base (actual) wages paid to labor and foremen for the specific force account work. No additive will be

provided for overtime payments. The labor burden rate(s) will include costs associated with the employee's actual base wages benefits, including FICA, unemployment contributions, Social Security and Medicare taxes and company fringe benefits. Company fringe benefits are the actual costs paid to, or on behalf of, workers by reason of health and welfare benefits, pension fund benefits, or other benefits, when such amounts are required by prevailing wage laws generally applicable to the classes of labor employed on the work. The Design-Build Team's actual labor burden rate(s) will be submitted to and approved by the Engineer prior to beginning the work. When the Design-Build Team cannot verify actual labor burden rate(s), an amount equal to 35% percent of the total base (actual) wage paid for labor and foremen will be added to the total base wages paid to the Design-Build Team. These percentage additives will be full compensation for overhead, benefits, contingencies, and all other costs associated with labor for the specific force account work.

(B) **Subsistence and Travel Allowances** The Design-Build Team may receive payment for actual costs paid to, or on behalf of, labor and foremen by reason of subsistence and travel allowances under certain circumstances. When the Design-Build Team is required to mobilize a crew for specific operations, the Engineer may approve reimbursement of subsistence, including meals and overnight lodging, if the specific force account work is determined to be outside of the scope of the original contract and the distance from the Design-Build Team's base location to the project is more than 75 miles. Should the Design-Build Team utilize forces currently working at the location of the specific force account work, the Engineer may approve the payment of subsistence, including meals and overnight lodging, if the work is determined to be outside of the scope of the original contract, the forces currently working at the location have routinely stayed overnight during the life of the project, and the distance from the Design-Build Team's base location to the project is more than 75 miles. The Engineer will approve the mode of travel.

Payment will be made to the Design-Build Team for subsistence, including meals and overnight lodging, paid in accordance with the Design-Build Team's usual policy for authorized labor and foremen in direct charge of the specific operations. Subsistence will be limited to the lesser of actual amount paid or the current maximum in-state rate for State employees. Verification of such costs paid to, or on behalf of, labor and foremen will be submitted to the Engineer. If the labor or foremen are partly employed on specific force account work and partly on other work, the amount of subsistence to be reimbursed will be prorated based upon the number of hours worked on the specific force account work during the payroll period.

(C) **Materials** For materials authorized and accepted by the Engineer and used, the Design-Build Team will receive the actual cost of such materials, including sales tax and transportation charges paid by him (exclusive of equipment rentals as hereinafter set forth), to which costs 15% will be added. The Design-Build Team will furnish records to the Engineer to verify the quantities of materials used in the specific force account work, prices of the materials, sales tax, and costs of transportation for the materials.

If materials used in the specific force account work are not specifically purchased for such work but are taken from the Design-Build Team's stock, the Design-Build Team will furnish an affidavit certifying that such materials were taken from his stock, the

quantity was actually used in the specific force account work, and the price and transportation cost claimed represent the actual cost to the Design-Build Team.

(D) **Equipment** For all equipment authorized by the Engineer to be used on the specific force account work the Design-Build Team will receive rental payment.

Hourly rental rates paid for equipment in use, which is Design-Build Team owned or rented from another Contractor, will not exceed 1/176th of the monthly rate listed in the *Rental Rate Blue Book for Construction Equipment* that is current at the time the specific force account work is performed.

In determining the hourly rate, the regional adjustment factor and the rate adjustment factor for equipment age, as set forth in the current Blue Book, will both be applied to the basic rate. An additive payment equal to 100% percent of the Blue Book estimated operating cost per hour will also be paid for all hours that equipment is in use. This additive payment will be full compensation for fuel, lubricants, repairs, servicing (greasing, fueling, and oiling), small tools, and other incidentals.

If rental rates for the equipment actually being used in the work are not listed in the Blue Book, the Design-Build Team will receive the prevailing rental rates being paid for such equipment in the area where the project is located. An additive payment equal to 15 percent of the prevailing rental rate will also be paid for all hours equipment is in use. This additive payment will be full compensation for fuel, lubricants, repairs, servicing (greasing, fueling, and oiling), small tools, and other incidentals.

Hourly rental rates for equipment held in ready as directed by the Engineer will be 50 percent of the rate paid for equipment in use. An additive payment will not be made for equipment held in ready. When equipment is in use less than 40 hours for any given week and is held in ready as directed by the Engineer, payment for held in ready time will be allowed for up to 40 hours, less hours in use. When payment is made for equipment held in ready as directed by the Engineer, the payment for held in ready time will be allowed for up to 8 hours in a day less hours in use.

Hourly rental rates for idle equipment that is held in ready in accordance with Article 104-4 will be paid at 50 percent of the rate paid for equipment in use. Hourly rental rates for idle equipment held in ready in accordance with Article 104-4 that is rented from a commercial rental agency will be paid for in accordance with the invoice rate for the equipment. An additive payment will not be made for idle equipment. When equipment is in use less than 40 hours for any given week and is held in ready as idle equipment in accordance with Article 104-4, payment for idle equipment time will be allowed for up to 40 hours, less hours in use. When payment is made for idle equipment held in ready in accordance with Article 104-4, the payment for idle equipment time held in ready will be allowed for up to 8 hours in a day less hours in use.

In the event the Design-Build Team does not possess or have readily available such equipment necessary for the performance of the work and such equipment is rented from a commercial rental agency, the Design-Build Team will receive payment based on the approved invoice rate for the equipment.

An additive payment equal to 15 percent of the calculated hourly invoice rate will also be paid for all hours equipment is in use. This additive payment will be full compensation for fuel, lubricants, repairs, servicing (greasing, fueling and oiling), small tools, and other

incidentals. The commercial rental agency cannot be the Design-Build Team or an affiliate of the Design-Build Team.

No compensation will be made for the use of equipment not authorized by the Engineer.

The Design-Build Team will be reimbursed for the actual transportation costs for equipment which the Design-Build Team is directed to furnish. Such payment will be limited to transportation costs from the nearest source of available equipment. If equipment is not returned to the point of origin, but is transported to another location, transportation costs will not exceed the cost of return to the point of origin. Rental for such equipment will not be paid when the equipment is being transported. The Design-Build Team will furnish records to the Engineer to verify the actual transportation costs for equipment.

The Design-Build Team will provide to the Engineer for approval a listing of all equipment and attachments to be utilized in the prosecution of the work. The list will include the manufacturer's name, type, model, serial number, and year of manufacture. The list will also include the invoice rate for equipment rented from a commercial rental agency. It will be the Design-Build Team's responsibility to verify the age of the equipment in a manner acceptable to the Engineer. Where such verification is not available, the rate adjustment factor used will be for the oldest equipment listed in the Blue Book.

The above prices and payments will be full compensation for fuel, lubricants, cutting edges, all repairs, and all other operating and maintenance costs other than operator's wages.

(E) **Owner-Operated Equipment** For all owner-operated equipment authorized by the Engineer to be used on the specific force account work, the Design-Build Team will receive rental payment equal to the existing contract rate(s) with no additive as provided in Subarticles 109-3(A), 109-3(B), 109-3(D) and 109-3(H). When existing contract rate(s) have not been established, the Design-Build Team will submit the proposed rate(s) for the owner-operated equipment with sufficient documentation as deemed necessary by the engineer for approval.

For fully maintained and operated trucks used for the specific force account work, the Design-Build Team will receive rental payment equal to the existing contract rate(s) with no additive as provided in Subarticles 109-3(A), 109-3(B), 109-3(D) and 109-3(H). When existing contract rate(s) have not been established, the prevailing industry rate(s) for fully maintained and operated trucks will be used for the specific force account work with approval of the Engineer.

For the purposes of force account work, owner-operated equipment, including fully maintained and operated trucks, will be considered subcontractors. No additional additives other than those allowed under Subarticle 109-3(G) will be allowed.

(F) **Miscellaneous** No additional allowance will be made for general superintendence, the use of manually powered tools, or other costs for which no specific allowance is herein provided.

(G) **Subcontracting** For administrative costs of the Design-Build Team in connection with approved subcontract work at any level and the use of owner-operated equipment at any level, the Design-Build Team will receive an additive amount in accordance with the rate schedule shown below of the total cost of such subcontracted work. The total cost of

such subcontracted work will include applicable labor and additive, bond and insurance, materials, and equipment costs incurred by the subcontractor; overhead and profit computed in accordance with Subarticles 109-3(A) through 109-3(D), 109-3(F), 109-3(H) and 109-3(I); and costs for owner-operated equipment, including fully maintained and operated trucks in accordance with Subarticle 109-3(E). No additional additives will be allowed.

Total Cost of Subcontract Work	Rate Schedule
$0 - $10,000	10%
Above $10,000	$1,000 + 5% Above $10,000

(H) **Overhead and Profit** An additive payment equal to 10 percent of the specific force account total will be paid to the Design-Build Team. This specific force account total is exclusive of the portion of the work included with Subarticles 109-3(C) Materials, 109-3(E) Owner-Operated Equipment and 109-3(G) Subcontracting. This payment will be full compensation for all costs including but not limited to home office and field overhead, burdens, and profit associated with the specific force account work.

An additive payment equal to 10 percent of the specific force account total for approved subcontract work will also be paid to the subcontractor for overhead and profit. This specific force account total for subcontract work is exclusive of the portion of the work included with Subarticles 109-3(C) Materials and 109-3(E) Owner-Operated Equipment. This payment will be full compensation for all costs including but not limited to home office and field overhead, burdens, and profit associated with the specific force account subcontracted work. No additional additives will be allowed.

(I) **Bond and Insurance** For property damage and liability insurance premiums and bond premiums on the specific force account work the Design-Build Team will receive the actual cost. The Design-Build Team will furnish satisfactory evidence to the Engineer of the rate or rates paid for such insurance and bond.

An annualized composite percentage may be used to determine the cost for bond and insurance. Insurance costs will be limited to the direct costs associated with the specific force account work. The Design-Build Team will furnish satisfactory evidence to the Engineer of the annualized composite percentage for the bond and insurance.

(J) **General** The Engineer will maintain the payment records of work performed on a force account basis. The Design-Build Team will compare records of work with the Engineer at the end of each day on which such work is in progress.

Any contention the Design-Build Team may have for an extension in the completion date, intermediate completion date, or intermediate completion time, due to performance of specific force account work will be considered as provided in Article 108-10.

109-4 PARTIAL PAYMENTS

(A) General

The Turnpike Authority will make partial payments based upon the Engineer's review of the Design-Build Team's payment requests. The Design-Build Team will prepare a payment request at least once each month on the date established by the Engineer. If in the judgment of the Engineer the amount of work performed is sufficient to warrant, the Engineer may accept from the Design-Build Team payment requests twice each month. The Turnpike Authority will not make a partial payment when the total value of work performed since the last partial payment, excluding mobilization, amounts to less than $10,000.00.

The Engineer may correct partial payments at any time prior to final payment. This will include corrections to the progress of the Work and the amount of the partial payment. The Engineer's adjustments on partial payments are final.

The Design-Build team shall use the most recent accepted cost-loaded CPM to estimate the value of the work performed and will submit this estimate as its payment request to the Engineer. The Design-Build Team shall submit the estimate of the value of the Work performed and the updated cost-loaded Schedule for each partial payment request. Failure to submit either part of the partial payment request will result in the Engineer withholding payment. With each payment request, the Design-Build Team shall certify that it has reviewed the cost-loaded CPM, that the payment request presents an accurate assessment of the level of completion of each work activity for which payment is being sought, and that the dollar value assigned to each work activity is reasonable and consistent with the dollar values assigned to all other work activities.. The Engineer will only accept payment requests that have been certified by the Design-Build Team.

The Design-Build Team will maintain and update the cost-loaded CPM as further described in Article 108-2 of this Special Provision.

If an Interim Schedule was submitted in accordance with Article 102-2 this Schedule was accepted by the Engineer, the Design-Build Team may estimate the value of the work performed using the Interim Schedule for the first 90 days after the Notice of Proceed. After 90 days, the Engineer will not process partial payment requests until the Design-Build Team develops a cost-loaded, initial CPM and the Engineer accepts this schedule.

If the Design Build Team did not submit an Interim Schedule acceptable to the Engineer, NCTA will issue payments for the mobilization costs (reference Article 800-2 of the Standard Specifications and the Project Special Provision, Mobilization), but will not otherwise process partial payment requests until the Design-Build Team submits an cost-loaded, Initial CPM and this CPM is accepted by the Engineer. The Design-Build Team's failure to develop an acceptable, cost-loaded Initial CPM may result in the Engineer withholding payment.

The Engineer will withhold from the partial payments amounts sufficient to cover any anticipated liquidated damages as determined by the Engineer as provided in Articles 108-8 and 109-4.

NCTA will not pay interest to the Design-Build Team on payments that are withheld in accordance with the requirements of this Special Provision or any other provision of the contract. The Design-Build Team is not entitled to payment, damages, or any other form

of compensation due to the withholding of partial payments in accordance with the requirements of this Special Provision or any other provision of the contract.

(B) Prompt Payments

The Design-Build Team and Contractors at all levels, prime, subcontractor, or second tier subcontractor shall within seven calendar days of receipt of monies, resulting from the satisfactory completion of work performed, pay subcontractors, second tier subcontractors, or material suppliers. This seven-day period begins upon knowledgeable receipt by the contracting firm obligated to make a subsequent periodic or final payment. This prompt payment requirement will be met if each firm mails the payment to the next level firm by evidence of postmark within the seven-day period. For the purposes of this section, the satisfactory completion of work performed shall exist when a subcontractor, second tier subcontractor or material supplier completes tasks called for in the subcontract and are in conformance with the terms of the Contract as required by the Turnpike Authority. This specification for prompt payment shall be incorporated into each subcontract or second tier subcontract issued for work performed on the project or for services provided.

The Design-Build Team shall not withhold any payments to a subcontractor, second tier subcontractor or material supplier for any claim or action arising outside the current contract with the Turnpike Authority. Notwithstanding the provisions of this section, the Design-Build Team may withhold up to 3% retainage if any subcontractor does not obtain a payment and performance bond for their portion of the work. If any retainage is held on subcontractors, all retainage shall be released within seven calendar days of satisfactory completion of all work. For the purpose of release of retainage, satisfactory completion is defined as completion of all physical elements and corresponding documentation as defined in the contract, as well as agreement between the parties as to the final quantities for all work performed in the subcontract. The Turnpike Authority will provide internal controls to expedite the determination and processing of the final quantities for the satisfactorily completed subcontract portions of the project.

Failure of any entity to make prompt payment as defined herein may result in the Department (1) withholding money from the Design-Build Team due for work performed by that entity in the next partial payment until the necessary assurances are made consistent with this specification; (2) removing the Design-Build Team and affiliated companies from consideration for future Turnpike Authority projects; or (3) a recommendation to the Department that a contractor be removed from the Department's prequalified bidders list or the recommendation for removal of other entities from the Department's approved subcontractors list.

(C) Unbalanced Bids

Any excess monies included in an unbalanced bid price that the Turnpike Authority determines to be in excess of a reasonable unit or lump sum bid price for the work, shall be retained by the Turnpike Authority until the last partial payment estimate, at which time these funds will be paid to the Design-Build Team. These retained funds will not be eligible for deposit in any trust account established pursuant to this contract nor for

interest for such delay in the payment for the retained portion of the bid price. Partial payment for work performed on an unbalanced bid item shall be at the reasonable unit or lump sum price determined in accordance with this subarticle.

For purposes of this subarticle, a reasonable unit or lump sum price will be deemed to be the average of the Engineer's Estimate and the individual balanced bid prices received from the other bidders for the item in question.

109-5 PAYMENT FOR MATERIAL TO BE USED IN THE WORK.

(A) Material Delivered on the Project

When so authorized by the Engineer, partial payments will be made up to 95 percent of the delivered cost of materials on hand that are to be incorporated in the work, provided that such materials have been delivered on or in close proximity to the project and stored in an acceptable manner. Material payments will be allowed when 95 percent of the accumulated costs of unpaid invoices are equal to or greater than $10,000.00, materials have been inspected and approved by the Engineer, and the documents listed in Subarticle 109-5(C) have been furnished to the Engineer.

(B) Material Stored at Fabricator's Facilities or Design-Build Team's Facilities

When so authorized by the Engineer, partial payments will be made up to 95 percent of the invoiced cost, exclusive of delivery cost, for bulky materials requiring fabrication at an off site location that are durable in nature and represent a significant portion of the project cost, if it has been determined by the Engineer, that the material cannot be reasonably stockpiled in the vicinity of the work. Material payments will be allowed when the materials have been inspected and approved by the Engineer and the documents listed in Subarticle 109-5(C) have been furnished to the Engineer.

(C) Required Documents

(1) Written consent of surety to make such partial payments,

(2) Bill of Sale from the Design-Build Team to the Turnpike Authority,

(3) Copy of invoice from material supplier verifying the cost of the material.

(D) General Requirements

The partial payments will be made on the conditional basis that the material meets the requirements of the contract and will be incorporated into the project. The Design-Build Team shall reimburse the Turnpike Authority for all partial payments for material paid for, but not incorporated into the project.

Partial payments for materials on hand will not constitute acceptance, and any faulty material will be rejected even though previous payment may have been made for same in the estimates.

Partial payment will not be made for fuel, supplies, form lumber, falsework, or used materials.

Partial payments will not be made on seed or any living or perishable plant materials.

Partial payment requests shall not be submitted by the Design-Build Team until those items requested have corresponding signed and sealed RFC plans accepted by the Turnpike Authority.

109-6 PAYMENT FOR LEFTOVER MATERIALS

Payment will be made to the Design-Build Team for materials meeting the requirements of the contract which were to have been permanently incorporated into the work or were to remain the property of the Department or Turnpike Authority but due to revisions or elimination of items of work by the Engineer, due to discrepancies in the contract, or due to termination of the contract are not used in the work. The Design-Build Team upon request will be reimbursed for the verified actual cost of such material delivered to a site designated by the Engineer, including any handling charges less any discount, but in no event shall payment exceed that which would have been made at the contract unit or lump sum price for the completed work.

The Design-Build Team shall furnish invoices and cost records to the Engineer to verify the actual cost of materials, handling charges, discounts that were taken, and transportation charges. No percentage additive will be added to the verified cost of such material.

No payment will be made for loss of anticipated profits and no other payment will be made for leftover materials except as listed above.

109-7 COMPENSATION PAID AT CONTRACT PRICES

Except as provided for by this article, payment for work performed will be made at the contract unit price or the contract lump sum price. Payment shall be made at the adjusted contract unit price, as applicable, when a price adjustment or pay factor is provided for by the contract or as determined by the Engineer in accordance with Article 105-3. In addition to the compensation made at the unit or lump sum price, adjustment in compensation will be made in accordance with Article 109-8. The Design-Build Team shall not be paid for any work performed for which there is not a contract price, nor shall the Design-Build Team receive additional compensation over and above the contract price for work performed or for extra work performed, except for work performed pursuant to an executed supplemental agreement or work performed in accordance with the applicable requirements of Section 104.

109-8 FUEL PRICE ADJUSTMENTS

Fuel price adjustments will be made to the payments due the Design-Build Team for contract items specified in the contract, or for extra work item specified in the supplemental agreement, when the average terminal price has fluctuated from the Base Index Price contained in the contract. The average terminal price is the average of the F.O.B. price for diesel fuel at the terminals in Charlotte, Wilmington and Selma, North Carolina. When the average terminal price fluctuates upward or downward from the Base Index Price, an amount will be added to or deducted from the monies due the Design-Build Team as follows.

The current quantity for the specified contract items for which partial payment is made will be multiplied by the respective Diesel Fuel Usage Factor contained in the contract to determine the theoretical diesel fuel usage for each specified contract item. The sum of the theoretical diesel fuel usage for all specified contract items will be multiplied by the algebraic difference between the average F.O.B. price for diesel fuel at the above specified terminals and the Base

Index Price contained in the contract to determine the fuel price adjustment to be made on the partial payment estimate.

The following formula will be used to calculate the appropriate payment or credit on the estimate.

$$S = (A - B)(\Sigma QF)$$

Where:

S= Fuel Price Adjustment for partial payment
B= Base Index Price
A= Average terminal price
Q= Partial payment quantity for contract item
F= Fuel factor for contract item

The average terminal price in effect on the first day of the month in which the partial payment period ends will be used to make payment adjustments for fuel whether or not more than one price fluctuation has occurred within a single partial payment period.

The Engineer's estimate of quantities for contract items measured by cross sections shall be utilized on the various partial payment estimates to determine fuel price adjustments. When the Engineer determines after payment for all or a portion of such contract item that is subject to a fuel price adjustment that the total quantity of work paid to date will be adjusted to reflect more accurate quantity determinations, the Engineer will make a pro rata increase or decrease in the fuel price adjustment proportionate to the adjustment in the total quantity of work paid. The prorated fuel price adjustment for the contract item will be determined by multiplying the cumulative fuel price adjustment made for that contract item for the previous estimate period(s) by the adjusted quantity for that contract item and divided by the total quantity of work paid for the previous estimates for the contract item. Payment for the prorated fuel price adjustment will be made accordingly on the partial payment estimate that includes the adjustment in the quantity of work paid.

109-9 FINAL PAYMENT

Upon completion of the final estimate assembly, the Engineer will notify the Design-Build Team giving the final quantities and the apparent liquidated damages, if any are assessed. After the Design-Build Team reviews the final quantities and submits the documents listed in Article 109-10, the entire sum found to be due after deducting all previous payments and all amounts to be retained or deducted under the requirements of the contract will be paid the Design-Build Team.

109-10 DOCUMENTS REQUIRED FOR THE PROCESSING OF THE FINAL ESTIMATE

Submit the following documents to the Engineer within 120 days after the contract Final Acceptance Date, as defined in Article 101-3. Failure to submit Item C, the final claim information, within the 120 days after the Final Acceptance Date, shall be a bar to recovery for

any extension in the completion date or any adjustment in compensation from that shown in the final estimate.

(A) Statement of Consent of Surety on the contract bonds for payment of money due the Design-Build Team.

(B) Affidavit of the Design-Build Team that all obligations and debts arising out of the construction have been satisfied, or affidavit which shall include a list of obligations not satisfied.

(C) Written notice that the Design-Build Team has no request for any extension in the completion date or any adjustment in compensation from that shown in the final estimate or in lieu thereof written notice presenting all request for adjustment of the final estimate setting forth full justification for such requests.

(D) As-constructed plans or other submittals as required by the Contract.

(E) Documents or guarantees to support any warranty provided by the Design Build Team.

Submission of false information in the documents required by this section shall be a basis for disqualifying the Design-Build Team from further bidding on both Turnpike Authority and Department projects in accordance with Article 102-16.

109-11 INTEREST ON FINAL PAYMENT

Should final payment on a project not be made within 120 calendar days after the project final acceptance date, interest, at the average rate earned by the State Treasurer on the investment within the State's Short Term Investment Fund during the month preceding the date interest becomes payable, will be paid the Design-Build Team on the final payment for the period beginning on the 121st day after final acceptance and extending to the date the final estimate is paid, provided that the documents required by Article 109-10 have been submitted within 30 days of the mailing of the notification outlined in Article 109-9. In the event the Design-Build Team fails to submit the required documents within the stipulated 30 day period, and the final estimate is not paid until 120 calendar days following final acceptance of the project, the number of days on which interest accrues will be reduced by the number of days in excess of 30 that the Design-Build Team requires to submit the document(s).

SECTION 150

MAINTENANCE OF TRAFFIC

150-1 GENERAL

The Design-Build Team will be required to maintain traffic within the limits of the project, including all existing roadways that cross or intersect the project, unless otherwise provided in the contract or approved by the Engineer. Traffic shall be maintained from the time the Design-Build Team begins work on the project site until acceptance of the project, including any periods during which the Design-Build Team's operations are suspended, unless otherwise provided for in the contract or approved by the Engineer. The Design-Build Team shall conduct his work in a safe manner that will create a minimum amount of inconvenience to traffic.

The Design-Build Team shall be responsible for maintaining in a safe, passable, and convenient condition, such part or parts of existing roads as are being used by him to maintain traffic within the limits of the project from the time the Design-Build Team begins work on the

project until acceptance of the project. As an exception to the above, the Turnpike Authority and the Department will be responsible for the removal of ice and snow from all portions of the project open to traffic.

Whenever it is necessary to use traffic control devices as shown in the contract, as determined by the Engineer, or in order to conform to the requirements of this section, the work of furnishing, erecting, operating, maintaining, covering, relocating, and removing traffic control devices shall be in accordance with the requirements of Division 11 & 12.

ITEMIZED PROPOSAL FOR CONTRACT No. C201993

January 25, 2008 2:00 pm

County: Wake

Line #	Item Number #	Sec #	Description	Quantity	Unit Cost	Amount
			ROADWAY ITEMS			
0001	0000900000-N	SP	GENERIC MISCELLANEOUS ITEM DESIGN, CONSTRUCTION, & INSPECTION	Lump Sum	L.S.	

0200/Jan25/Q1.0/D 900000 /E1

Total Amount Of Bid For Entire Project:_____

FUEL USAGE FACTOR CHART AND ESTIMATE OF QUANTITIES

Description of Work	Units	Fuel Usage Factor Diesel #2	Estimate of Quantities
Unclassified Excavation	Gal/CY	0.29	_____cy
Borrow Excavation	Gal/CY	0.29	_____cy
Aggregate Base Course	Gal/Ton	0.55	_____tons
Aggregate for Cement Treated Base Course			
Portland Cement for Cement Treated Base Course			
Asphalt Concrete Base Course	Gal/Ton	2.90	_____tons
Asphalt Concrete Intermediate Course			
Asphalt Concrete Surface Course			
Open-Graded Asphalt Friction Course			
Sand Asphalt Surface Course, Type F-1			
Portland Cement Concrete Pavement	Gal/CY	0.98	_____cy
Structural Concrete			
Concrete Shoulders Adjacent to Pavement			

☐ The above quantities represent a reasonable estimate of the total quantities anticipated, for each item, as pertaining to fuel price adjustments, and is representative of the design proposed in the Technical Proposal submitted under separate cover.

Or

☐ The Design-Build Team elects not to pursue reimbursement for Fuel Price Adjustments on this project.

The information submitted on this sheet is claimed as a "Trade Secret" in accordance with the requirements of G.S. 66-152(3) until such time as the Price Proposal is opened.

_____ _____
Signature, Title Dated

_____
Print Name, Title

(Submit a copy of this sheet in a separate sealed package with the outer wrapping clearly marked "Fuel Price Adjustment" and deliver with the Technical and Cost Proposal.)

LISTING OF DBE SUBCONTRACTORS

Sheet ____ of ____

FIRM NAME AND ADDRESS	ITEM NO.	ITEM DESCRIPTION	(*) AGREED UPON UNIT PRICE	DOLLAR VOLUME OF SUBLET ITEM

CONTRACT NO._____ **COUNTY**_____ **FIRM**_____

THIS FORM MUST BE COMPLETED IN ORDER FOR THE BID TO BE CONSIDERED RESPONSIVE AND BE PUBLICLY READ.
BIDDERS WITH NO DBE PARTICIPATION MUST SO INDICATE THIS ON THE FORM BY ENTERING THE WORD OR NUMBER ZERO.

LISTING OF DBE SUBCONTRACTORS

Sheet ____ of ____

FIRM NAME AND ADDRESS	ITEM NO.	ITEM DESCRIPTION	(*) AGREED UPON UNIT PRICE	DOLLAR VOLUME OF SUBLET ITEM

CONTRACT NO._____ **COUNTY**_____ **FIRM**_____

LISTING OF DBE SUBCONTRACTORS

Sheet ____ of ____

FIRM NAME AND ADDRESS	ITEM NO.	ITEM DESCRIPTION	(*) AGREED UPON UNIT PRICE	DOLLAR VOLUME OF SUBLET ITEM

CONTRACT NO._____ **COUNTY**_____ **FIRM**_____

LISTING OF DBE SUBCONTRACTORS

Sheet ____ of ____

FIRM NAME AND ADDRESS	ITEM NO.	ITEM DESCRIPTION	(*) AGREED UPON UNIT PRICE	DOLLAR VOLUME OF SUBLET ITEM

CONTRACT NO._____ COUNTY_____ FIRM_____

COST OF CONSTRUCTION WORK ONLY **$ _____**

(*) The Dollar Volume Shown In This Column Shall be Actual Price Agreed Upon by the Prime Contractor and the DBE Subcontractor, and These Prices Will Be Used to Determine The Percentage of the DBE Participation in this Contract.

Dollar Volume of DBE Subcontractor **$ _____

Percentage of Total Construction Cost _____**%**

**MUST HAVE ENTRY EVEN IF FIGURE TO BE ENTERED IS ZERO.

EXECUTION OF BID, NONCOLLUSION AFFIDAVIT, AND DEBARMENT CERTIFICATION

The person executing the bid, on behalf of the Bidder, being duly sworn, solemnly swears (or affirms) that neither he, nor any official, agent or employee of the bidder has entered into any agreement, participated in any collusion, or otherwise taken any action which is in restraint of free competitive bidding in connection with this bid, and that the Bidder intends to do the work with its own bonafide employees or subcontractors and is not bidding for the benefit of another contractor.

In addition, execution of this bid in the proper manner also constitutes the Bidder's certification of "Status" under penalty of perjury under the laws of the United States in accordance with the Debarment Certification included elsewhere in the proposal, provided that the Debarment Certification also includes any required statements concerning exceptions that are applicable.

LIMITED LIABILITY COMPANY

SIGNATURE OF CONTRACTOR (Principal)

Name of Contractor _____
Print or type full name of Firm

_____
Address as prequalified

Signature of Manager _____
Individually

_____
Print or type signer's name and title

Subscribed and sworn to before me this the

_____ day of _____, 20_____.

_____
Signature of Notary Public
Of _____County

State of _____

Notary Seal Here

My Commission Expires _____

EXECUTION OF BID, NONCOLLUSION AFFIDAVIT, AND DEBARMENT CERTIFICATION

The person executing the bid, on behalf of the Bidder, being duly sworn, solemnly swears (or affirms) that neither he, nor any official, agent or employee of the bidder has entered into any agreement, participated in any collusion, or otherwise taken any action which is in restraint of free competitive bidding in connection with this bid, and that the Bidder intends to do the work with its own bonafide employees or subcontractors and is not bidding for the benefit of another contractor.

In addition, execution of this bid in the proper manner also constitutes the Bidder's certification of "Status" under penalty of perjury under the laws of the United States in accordance with the Debarment Certification included elsewhere in the proposal, provided that the Debarment Certification also includes any required statements concerning exceptions that are applicable.

CORPORATION

_____
Print or type full name of Corporation

_____
Address as prequalified

Attest _____ By _____
Signature of Secretary, Assistant Secretary
Delete inappropriate title

Signature of President, Vice President, Assistant Vice President
Delete inappropriate title

_____
Print or type signer's name

_____
Print or type signer's name

Affix Corporate Seal

Subscribed and sworn to before me this the

_____ day of _____, 20_____

_____
Signature of Notary Public
Of _____County

Notary Seal Here

State of _____

My Commission Expires _____

EXECUTION OF BID, NONCOLLUSION AFFIDAVIT, AND DEBARMENT CERTIFICATION

The person executing the bid, on behalf of the Bidder, being duly sworn, solemnly swears (or affirms) that neither he, nor any official, agent or employee of the bidder has entered into any agreement, participated in any collusion, or otherwise taken any action which is in restraint of free competitive bidding in connection with this bid, and that the Bidder intends to do the work with its own bonafide employees or subcontractors and is not bidding for the benefit of another contractor.

In addition, execution of this bid in the proper manner also constitutes the Bidder's certification of "Status" under penalty of perjury under the laws of the United States in accordance with the Debarment Certification included elsewhere in the proposal, provided that the Debarment Certification also includes any required statements concerning exceptions that are applicable.

JOINT VENTURE

(1) _____ and _____
A Joint Venture

(2) _____ *(Seal)*
Name of Contractor

_____
Address as prequalified

_____ By _____
Signature of witness or Attest Signature of Contractor

_____ _____
Print or type signer's name Print or type signer's name

and

(3) _____ *(Seal)*
Name of Contractor

_____
Address as prequalified

_____ _____
Signature of witness or Attest By Signature of Contractor

_____ _____
Print or type signer's name Print or type signer's name

Notary for Line 2
Subscribed and sworn to before me this the

_____ day of _____, 20_____.

_____
Signature of Notary Public
Of _____County

State of _____

My Commission Expires _____

Notary for Line 2 Seal Here

Notary for Line 3 Seal Here

Notary for Line 3
Subscribed and sworn to before me this the

_____ day of _____, 20_____.

_____
Signature of Notary Public
Of _____County

State of _____

My Commission Expires _____

EXECUTION OF BID, NONCOLLUSION AFFIDAVIT, AND DEBARMENT CERTIFICATION

The person executing the bid, on behalf of the Bidder, being duly sworn, solemnly swears (or affirms) that neither he, nor any official, agent or employee of the bidder has entered into any agreement, participated in any collusion, or otherwise taken any action which is in restraint of free competitive bidding in connection with this bid, and that the Bidder intends to do the work with its own bonafide employees or subcontractors and is not bidding for the benefit of another contractor.

In addition, execution of this bid in the proper manner also constitutes the Bidder's certification of "Status" under penalty of perjury under the laws of the United States in accordance with the Debarment Certification included elsewhere in the proposal, provided that the Debarment Certification also includes any required statements concerning exceptions that are applicable.

INDIVIDUAL DOING BUSINESS UNDER A FIRM NAME

SIGNATURE OF CONTRACTOR (Principal)

Name of Contractor _____
Print or type Individual Name

Trading and doing business as _____
Print or type firm name

_____
Address as prequalified

Signature of Contractor _____ *Seal*
Individually

_____ _____
Print or type witness' name Print or type signer's name

Subscribed and sworn to before me this the

_____ day of _____, 20_____.

_____
Signature of Notary Public

Of _____County
State of _____

Notary Seal Here

My Commission Expires _____

EXECUTION OF BID, NONCOLLUSION AFFIDAVIT, AND DEBARMENT CERTIFICATION

The person executing the bid, on behalf of the Bidder, being duly sworn, solemnly swears (or affirms) that neither he, nor any official, agent or employee of the bidder has entered into any agreement, participated in any collusion, or otherwise taken any action which is in restraint of free competitive bidding in connection with this bid, and that the Bidder intends to do the work with its own bonafide employees or subcontractors and is not bidding for the benefit of another contractor.

In addition, execution of this bid in the proper manner also constitutes the Bidder's certification of "Status" under penalty of perjury under the laws of the United States in accordance with the Debarment Certification included elsewhere in the proposal, provided that the Debarment Certification also includes any required statements concerning exceptions that are applicable.

INDIVIDUAL DOING BUSINESS IN HIS OWN NAME

SIGNATURE OF CONTRACTOR (Principal)

Name of Contractor _____
Print or type name

_____
Address as prequalified

Seal

_____ _____
Signature of Contractor Individually

_____ _____
Signature of witness Print or type signer's name

_____
Print or type witness' name

Subscribed and sworn to before me this the

_____ day of _____, 20_____.

_____
Signature of Notary Public
Of _____County

Notary Seal Here

State of _____

My Commission Expires _____

EXECUTION OF BID, NONCOLLUSION AFFIDAVIT, AND DEBARMENT CERTIFICATION

The person executing the bid, on behalf of the Bidder, being duly sworn, solemnly swears (or affirms) that neither he, nor any official, agent or employee of the bidder has entered into any agreement, participated in any collusion, or otherwise taken any action which is in restraint of free competitive bidding in connection with this bid, and that the Bidder intends to do the work with its own bonafide employees or subcontractors and is not bidding for the benefit of another contractor.

In addition, execution of this bid in the proper manner also constitutes the Bidder's certification of "Status" under penalty of perjury under the laws of the United States in accordance with the Debarment Certification included elsewhere in the proposal, provided that the Debarment Certification also includes any required statements concerning exceptions that are applicable.

PARTNERSHIP

SIGNATURE OF CONTRACTOR (Principal)

_____
Print or type full name of partnership

_____
Address as prequalified

Seal

_____ By _____
Signature of witness Signature of Partner

Print or type witness' name _____
Print or type signer's name

Subscribed and sworn to before me this the

_____ day of _____, 20_____.

Notary Seal Here

_____
Signature of Notary Public
Of _____County

State of _____

My Commission Expires _____

1-18-08
Z-13

Contract No **C201993**

County (ies): **Wake**

ACCEPTED BY THE
NCTA

NCTA Chief Engineer

Date

Execution of Contract and Bonds
Approved as to Form:

Attorney General

DEBARMENT CERTIFICATION OF BIDDERS

Instructions & conditions for certification

1. By signing and submitting this proposal, the bidder is providing the certification set out below.

2. The inability of a bidder to provide the certification required below will not necessarily result in denial of participation in this contract. If the certification is not provided, the bidder must submit an explanation (exception) of why it cannot provide the certification set out below. The certification or explanation (exception) will be considered in connection with NCTA's determination whether to award the contract. However, failure of the prospective bidder to furnish a certification or an explanation (exception) may be grounds for rejection of the bid.

3. The certification in this provision is a material representation of fact upon which reliance is placed when NCTA determines whether or not to award the contract. If it is later determined that the bidder knowingly rendered an erroneous certification, in addition to other remedies available to the Federal Government, NCTA may terminate this contract for cause of default.

4. The prospective bidder shall provide immediate written notice to NCTA if at any time the bidder learns that its certification was erroneous when submitted or has become erroneous by reason of changed circumstances.

5. The terms "covered transaction," "debarred," "suspended," "ineligible," "lower tier covered transaction," "participant," "person," "primary covered transaction," "principal," "proposal," and "voluntarily excluded," as used in this provision, have the meanings set out in the Definitions and Coverage sections of the rules implementing Executive Order 12540. A copy of the Federal Rules requiring this certification and detailing the definitions and coverages may be obtained from the Chief Engineer of NCTA.

6. The bidder agrees by submitting this bid that, should the contract be awarded, it shall not knowingly enter into any lower tier covered transaction with a person who is debarred, suspended, declared ineligible, or voluntarily excluded from participation in this contract, unless authorized by NCTA.

7. The prospective bidder further agrees by submitting this proposal that it will include the Federal-Aid Provision titled "Required Contract Provisions Federal-Aid Construction Contract" (Form FHWA PR 1273) provided by NCTA, without subsequent modification, in all lower tier covered transactions.

8. The prospective bidder may rely upon a certification of a prospective participant in a lower tier covered transaction that it is not debarred, suspended, ineligible, or voluntarily excluded from the covered transaction, unless it knows that the certification is erroneous. A participant may decide the method and frequency by which it determines the eligibility of its principals.

9. Nothing contained in the foregoing shall be construed to require establishment of a system of records in order to render in good faith the certification required by this provision. The knowledge and information of a participant is not required to exceed that which is normally possessed by a prudent person in the ordinary course of business dealings.

10. Except for transactions authorized under paragraph 6 of these instructions, if the successful bidder knowingly enters into a lower tier covered transaction with a person who is suspended, debarred, ineligible, or voluntarily excluded from participation in this transaction, in addition to other remedies available to the Federal Government, NCTA may terminate this transaction for cause of default.

DEBARMENT CERTIFICATION

The bidder certifies to the best of its knowledge and belief, that it and its principals:

a. Are not presently debarred, suspended, proposed for debarment, declared ineligible, or voluntarily excluded from covered transactions by any Federal department or agency;

b. Have not within a three-year period preceding this proposal been convicted of or had a civil judgment rendered against them for commission of fraud or a criminal offense in connection with obtaining, attempting to obtain, or performing a public (Federal, State or local) transaction or contract under a public transaction; violation of Federal or State antitrust statutes or commission of embezzlement, theft, forgery, bribery, falsification or destruction of records; making false statements; or receiving stolen property;

c. Are not presently indicted for or otherwise criminally or civilly charged by a governmental entity (Federal, State or local) with commission of any of the offenses enumerated in paragraph b. of this certification; and

d. Have not within a three-year period preceding this proposal had one or more public transactions (Federal, State or local) terminated for cause or default.

Where the prospective bidder is unable to certify to any of the statements in this certification, it shall attach an explanation to this proposal.

****

IF AN EXPLANATION, AS PROVIDED IN THE ABOVE DEBARMENT CERTIFICATION, HAS BEEN ATTACHED TO THE PROPOSAL, PLEASE CHECK THE BOX SHOWN BELOW:

☐ An explanation has been attached to the proposal.